Submitted to Ind. Eng. Chem. Fundamentals

UCRL-18912
Preprint

cy. 2

LIBRARY AND
DOCUMENTS SECTION

AN INTERFACE IMPEDANCE BRIDGE

William B. Lamb, Thomas G. Springer, and Robert L. Pigford

May 1969

AEC Contract No. W-7405-eng-48

TWO-WEEK LOAN COPY

This is a Library Circulating Copy
which may be borrowed for two weeks.
For a personal retention copy, call
Tech. Info. Division, Ext. 5545

UCRL-18912
cy. 2

LAWRENCE RADIATION LABORATORY
UNIVERSITY of CALIFORNIA BERKELEY

DISCLAIMER

This document was prepared as an account of work sponsored by the United States Government. While this document is believed to contain correct information, neither the United States Government nor any agency thereof, nor the Regents of the University of California, nor any of their employees, makes any warranty, express or implied, or assumes any legal responsibility for the accuracy, completeness, or usefulness of any information, apparatus, product, or process disclosed, or represents that its use would not infringe privately owned rights. Reference herein to any specific commercial product, process, or service by its trade name, trademark, manufacturer, or otherwise, does not necessarily constitute or imply its endorsement, recommendation, or favoring by the United States Government or any agency thereof, or the Regents of the University of California. The views and opinions of authors expressed herein do not necessarily state or reflect those of the United States Government or any agency thereof or the Regents of the University of California.

AN INTERFACE IMPEDANCE BRIDGE

William B. Lamb,* Thomas G. Springer,
and Robert L. Pigford

Department of Chemical Engineering
and Lawrence Radiation Laboratory
University of California
Berkeley, California 94720

May 1969

ABSTRACT

An apparatus is described for the observation of the resistance to passage of a soluble gas through a gas-liquid interface under dynamic conditions. The apparatus resembles an electrical a.c. bridge circuit and permits measurements to be made over a range of frequencies. From the data one can test various interface mass transfer mechanisms, including the effects of surfactants on both stagnant and turbulent liquid surfaces.

INTRODUCTION

Throughout most of the large body of work that has been done to determine mass transfer resistances of gas-liquid interfaces the experiments have been carried out at steady state, the rate of transfer being determined from chemical analyses of streams entering and leaving or from measurements of the volume of gas taken up by the liquid at a constant rate. The difficulties of determining the resistance of one of the phases from such measurements when

*Present address: E. I. duPont de Nemours and Co., Buffalo, New York

both phases offer resistance are well known. And the fact that wholly different assumptions about the fluid mechanical structure or other characteristics of interfaces lead to nearly the same predictions of steady state mass transfer coefficients has led to question whether the traditional measurements will ever reveal the details of interface structure. After all, each theory has quantities in it which are not known a priori for real equipment and which can be chosen arbitrarily to make the theories fit empirical data. It is only by using highly idealized gas absorbers, such as wetted-wall columns or liquid jet devices, that physically important quantities like times of exposure of the surfact to the gas (Higbie, 1935) can be determined uniquely by the design of the apparatus. Moreover, no way has been found heretofore to expose a turbulent liquid interface to a gas under conditions where the frequency of random replacement of elements of the liquid surface is known accurately or even where such interface statistical phenomena can be controlled precisely.

In fields such as electrical engineering, however, the use of frequency response experimental methods for the exploration of rate phenomena is well established. Indeed the art of electrical measurements involving a.c. bridges and linear circuits has not been exploited very often in chemical engineering laboratory research, although the use of such procedures for the design of control systems is familiar. Particularly in the field of mass transfer mechanisms, the use of transient methods of observation would appear to be promising (cf. Whitaker and Pigford, 1966).

THE INTERFACE IMPEDANCE BRIDGE APPARATUS

Consider an apparatus consisting of two identical chambers, each containing a deep pool of liquid with a pure gas phase above, as shown in Fig. 1. The liquid is saturated with dissolved gas at the time-average gas pressure, but through the use of duplicate gas cylinders driven from the same rotating shaft the volumes of the two gas spaces vary sinusoidally in an identical manner. If the gas were insoluble in each chamber there would be no pressure difference between the chambers although the pressure in each chamber would oscillate. On the other hand, if there is even a small difference in the rates of solution of the gas in the chambers a pressure-difference signal will be detected on an electrical transducer. After filtering of noise through a band-pass filter circuit this signal can be recorded on a chart beside a second signal representing the pressure variations on one side; the phase difference and the ratio of the amplitudes can be observed over a range of frequencies. From such a frequency response and, on the assumption that all the disturbances are small enough to be governed by the linearized approximations to the necessary rate equations, constants in such rate expressions can be found. Distinctions can be made between alternative assumptions about the rate processes themselves and detailed information can be developed about the statistical characteristics of turbulent interfaces, as will be shown.

Such an apparatus can be called an "interface impedance bridge" because it is wholly analogous to a bridge-type electrical circuit, as indicated in Fig. 2. The electrical circuit consists of two parallel paths from a constant-voltage current source to ground. Each is through a series

combination of a condenser and a resistor, the capacitance of the condenser being changed sinusoidally by moving the plates toward and away from each other. The a.c. voltage appearing across the bridge depends on the difference in the two resistances if the condensers are duplicates. If one of the resistors has known a.c. impedance, the frequency response data will determine the other impedance.

In the mass transfer version of the bridge the resistors correspond to the interfaces and the underlying diffusional resistance of the phases. When the frequency is increased the waves of concentration present in the liquid will be confined to thinner and thinner layers of liquid and the resistance of the interface itself will be emphasized.

One version of the interface bridge consists, therefore, in having a stagnant, clean, liquid surface on one side for use as a standard interface of calculable impedance. On the other side one can have, for example, a similar interface covered with a layer of a surfactant whose impedance we wish to measure. Likewise, opposite the stagnant interface we might place a turbulent interface, obtained by stirring the pool of liquid below. The frequency response information would yield in this case the whole statistical distribution of fluid particle residence times in the interface as well as the average surface element replacement frequency. Obviously, studies can be conducted to find the ways in which surfactants inhibit fluid motion at interfaces.

QUANTITATIVE DEVELOPMENT OF THE METHOD

Consider first the calculation of pressure changes that occur inside a single chamber containing a constant volume of liquid as the volume of the gas space is varied sinusoidally according to

$$V(t) = V_o + \hat{V} \exp(i\omega t) \tag{1}$$

Assume that the gas follows $pV = nRT$ and that heat transfer between the gas and the solid or liquid surfaces which surround it can be represented by the usual rate expression with an overall coefficient U and an area S. Then the energy balance for the gas is

$$n\, C_v\, \dot{T} = US(T_o - T) - p\, \dot{V} \tag{2}$$

where the dots above mean differentiation with respect to time and where T_o is the constant temperature of the surroundings.

The material balance includes rate expression, $Hk_L(\omega)\,(p - p_o)$, where H is the Henry's Law coefficient, $k_L(\omega)$ is the possibly frequency-dependent mass transfer coefficient of the liquid surface, and p_o is the time-average pressure of the gas. It is assumed that the liquid mass is so large and the frequencies so high that the bulk of the liquid does not change its concentration as the gas pressure p varies. The balance is

$$\dot{n} = - Hk_L A(\, p - p_o) \tag{3}$$

where A is the known area of the interface.

By assuming that the linearly correct solution is of the form

$$p = p_o + \hat{p} \exp(i\omega t)$$

$$T = T_o + \hat{T} \exp(i\omega t)$$

$$n = n_o + \hat{n} \exp(i\omega t)$$

one can easily find the result,

$$\frac{\hat{p}}{p_o} = - \frac{1 + \dfrac{\gamma - 1}{1 + (\gamma - 1)(UST_o/p_oV_o)(1/i\omega)}}{1 + (HART_o/V_o)(k_L(\omega)/i\omega)} \frac{\hat{V}}{V_o} \tag{4}$$

Obviously, the volume changes produce pressure oscillations which depend on the frequency for two reasons. One is that the changes in gas temperature may be nearly adiabatic and reversible (at high frequencies) or nearly isothermal (at low frequencies); the other is that the mass transfer into the liquid causes dissolved gas to be stored there temporarily and that the mass transfer coefficient, k_L, may itself depend on the frequency.

Suppose that Eq. (4) is applied to each side of the bridge and that the mass transfer coefficients are k_{L1} and k_{L2} on the two sides, respectively. The difference in pressure can be represented by the formula $\Delta p = \hat{\Delta p} \exp(i\omega t)$ and an equation for the frequency dependence of $\hat{\Delta p}$ can be obtained by applying Eq. (4) to each side. It is convenient, however, to divide the result by the pressure coefficient for one side because thereby the factor representing the effects of temperature changes in the two chambers drops out. The result is

$$\frac{\hat{\Delta p}}{\hat{p}_2} = \frac{(HART_o/V_o)[k_{L2}(\omega) - k_{L1}(\omega)]}{i\omega + (HART_o/V_o)\, k_{L1}(\omega)} \tag{5}$$

which suggests a comparison of the amplitudes and the phase of the signals, Δp and $p_2 - p_o$.

THE FREQUENCY-DEPENDENT MASS TRANSFER COEFFICIENT FOR A STAGNANT, CLEAN SURFACE

A convenient surface to use as a reference on the side of the bridge having a known impedance is formed by a pool of clean liquid at rest. If there is no resistance at the interface itself to the passage of soluble gas molecules the mass transfer coefficient is determined entirely by the molecular diffusional resistance of the liquid substrate. Since the pool is very deep there are negligible changes in composition at any large depth in the liquid and the solution of Fick's second law is simply

$$C(x,t) = H\,\hat{p}\,\exp\left(i\omega t - \sqrt{\frac{i\omega}{\mathcal{D}}}\,x\right) + Hp_o \tag{6}$$

where x represents distance from the interface. The mass transfer coefficient is easily calculated from the interface concentration gradient as

$$k_L = (i\omega\mathcal{D})^{1/2} \tag{7}$$

THE MASS-TRANSFER COEFFICIENT FOR A RANDOMLY TURBULENT SURFACE

Following the suggestion of Danckwerts (1951), a liquid interface which is continually exchanging liquid particles with the substrate can be thought of as being composed of a mosaic of small liquid patches, each having arrived randomly in time and, upon arrival in a fresh condition, having displaced another particle which was then completely submerged. Whether such a conception of the structure of an interface is correct can be investigated by comparing an observed frequency response with the one which is expected,

$$k_L = \sqrt{\mathcal{D}(s + i\omega)} \tag{8}$$

where s^{-1} is the average lifetime of a surface element.

THE INTERFACE IMPEDANCE BRIDGE APPARATUS

An early apparatus built along the lines described here was used by Lamb (1965). Some of these preliminary data will be presented below. Figure 3 shows a more recent, improved version of the same equipment as described by Springer (1969).

Two "Pyrex" containers, each holding 10 liters of water, are placed side by side on a sturdy table. The water level in each container is about an inch below a carefully machined "Lucite" cover, which is held tightly against the smooth upper rim of the glass vessel and a "Neoprene" O-ring. Each vessel rests in a base which has been filled with Plaster of Paris to fit the glass. Such measures are needed to avoid unwanted volume changes owing to the pressure excursions in the confined gas, which is pure sulfur dioxide.

Behind the glass jars is an electrically driven piston rod as shown in Fig. 4. This device simultaneously moves the hinged covers of two sheet metal boxes in which are "Neoprene" balloons. The baloons are hospital rebreathing bags. The insides of the metal boxes are shaped to the elliptical contour of the balloons by insertion of hollowed pieces of hardwood thereby forming a cavity about the same size as the balloons in their average positions. The balloons are connected by several parallel lengths of large-bore butyl rubber vacuum tubing to their respective glass chanbers. When the piston moves the balloons compress or expand and the gas pressure inside the two chambers changes very nearly sinusoidally.

The gas pressure in one chamber and the smaller difference in the pressures were measured with Statham strain gauge transducers. The pressure difference instrument was capable of readings as small as 0.001 in. of water, an amount which would correspond to a volume change on one side of the bridge of only 0.2 cc. The transducers were connected to a Sanborn Transducer Amplifier-Indicator and then to a Sanborn two-channel inking recorder. The ratio of amplitudes could be found from the ink records. The phase difference between the signals could be read from the charts but more accurate measurements were possible with the aid of a phase-sensitive demodulator.

A critical step in the use of the apparatus was the initial adjustments of the two liquid volumes to give a zero output from the bridge. For example, if it is desired to compare a still and a stirred liquid surface, operation was begun with both sides still. The pressure difference signal was not zero initially but the amplitude could be reduced to about 0.0125 in. water by carefully adding or removing gas-saturated water. The amplitude of the input

pressure signal was about 16.6 in. water; during an experiment comparing a turbulent water interface with a stationary interface a pressure difference signal on the order of 0.25 in. water was obtained. Adjustment of the gas pressures to make them equal on both sides was essential and time had to be allowed for the whole mass of liquid in each chamber to come to equilibrium at the average gas pressure. Watching changes in the phase difference was very helpful in making these adjustments.

In our earliest work the reference chamber was a dry container having the same volume as the wet chamber. In order to obtain the initial zero adjustment the liquid surface in the wet chamber was covered with a thin film of polyvinyl fluoride to make it impermeable to the passage of sulfur dioxide. After the volumes of the chambers had been adjusted the film was pushed under the water surface and the measurements of the surface impedance began.

A flat paddle with inclined blades was provided in one of the chambers, entering through a "Teflon" seal in the bottom, in order to stir the liquid. Connections were provided at the top of the chamber for introducing small quantities of surfactants through a hypodermic needle.

TYPICAL EXPERIMENTAL RESULTS

Figure 5 shows some of the data of Lamb (1965) obtained with an early apparatus in which one side of the bridge was formed from a dry metal chamber having the same volume as the glass absorption chamber but a different shape. For the metal chamber, $k_{L1} = 0$, and Eq. (5) is simplified. When the expression in Eq. (7) is introduced for k_{L2}, corresponding to a stagnant but active surface on side two of the bridge, the simple result is

$$\frac{\hat{\Delta p}}{\hat{p}_2} = (HART_o/V_o)(\mathcal{D}/i\omega)^{1/2} \tag{9}$$

As the figure shows, the amplitude does fall off as the inverse square root of the frequency, as expected. But, even more significantly, the values of the amplitude ratio agreed very well with those expected from Eq. (9) and from the established values of the Henry's Law coefficient for sulfur dioxide and its diffusion coefficient in water. This indicates that the liquid was very nearly stagnant, at least as far as its response to concentration pulses arriving no more slowly than about one per 10 sec. are concerned, and that such a surface should be a good standard of comparison for others in which there is greater practical interest.

Figure 5 shows some of Lamb's (1965) results when one side of the bridge was stirred with a paddle having flat, inclined blades, each 1 in. wide by 1.7 in. long. The stirrer was located 3.5 in. above the bottom of a 10-in. deep pool of clean water and four 1-in. wide baffles were located around the inside of the 12 in. I.D. tank. The stirrer speed was 300 r.p.m. It is clear that the frequency response was affected by the interfacial turbulence, especially at low frequencies of the concentration signals. At high frequencies, however, the stirred interface and the stagnant one gave nearly the same responses.

These observations are qualitatively in agreement with the expectations based on the Danckwerts function, Eq. (8). It shows that, depending on the value of s, there will be a transition from a condition at low frequencies,

where amplitude is proportional to ω^{-1}, to high frequencies, where it will be proportional to $\omega^{-1/2}$. In qualitative terms the cause of this change is as follows. At low frequencies of the pressure changes the average interfacial fluid element is exposed to only a small fraction of a single concentration cycle before it is submerged. During its life the originally fresh element of surface is able to absorb or desorb dissolved gas freely as needed to respond to the portion of the pressure signal which it feels. At high frequencies, on the other hand, an average fluid particle is buffeted by several changes in surface concentration. Although it may experience some transient response during the first cycle or so, subsequent cycles find it behaving just as if it has been in the interface for a long time before. Thus, by changing the frequency one can pick out different parts of the surface age spectrum, including all the particles at low frequencies and smaller fractions of the total surface age spectrum as the frequency grows higher. In fact, as we intend to show in a later publication, it is possible to extract the residence time distribution function itself from the observed frequency response.

CONCLUSIONS

The interface impedance bridge is not an easy apparatus to use. Nevertheless, it yields a wealth of detailed information about the kinetic phenomena which affect interfacial mass transfer. The method is in use in our laboratories for the investigation of the role of soluble and insoluble surfactants when SO_2 gas molecules dissolve in water, including not only the ways in which surfactants inhibit the passage of dissolving molecules into a stationary surface but also the ways in which surfactants decrease the

mobility of otherwise free particles of water at the interface. We expect to report complete results in a subsequent paper.

NOMENCLATURE

V = volume of gas in chamber, cc.

ω = frequency, radians/sec.

t = time, seconds

n = number of moles of gas in chamber

C_V = molar heat capacity of gas at constant volume

T = temperature of gas, OK.

U = heat transfer coefficient between gas and walls of chamber

S = inside surface area of chamber

T_o = temperature of chamber walls

p = gas pressure, atm.

H = Henry's Law coefficient for gas in liquid, moles/(cc)(atm)

k_L = liquid phase mass transfer coefficient, cm/sec.

A = area of liquid surface, sq. cm.

p_o = time-average pressure of gas

γ = ratio of heat capacities for gas

R = gas constant, 82.06 (cc.)(atm.)/(mole)(OK)

$\mathcal{D}$ = diffusion coefficient of dissolved gas in liquid, cm^2/sec.

s = replacement frequency of elements in liquid surface, $sec.^{-1}$

X = distance from interface into liquid

r = impedance of resistance element in analogous electrical bridge

C = capacitance of condenser in analogous electrical bridge

ACKNOWLEDGMENTS

These studies were supported by AEC Contract W-7405-eng-48.

The first experiments described in this paper were carried out by two of the authors at the University of Delaware.

LITERATURE CITED

Danckwerts, P. V., Ind. Eng. Chem. 43, 1460 (1951).

Higbie. R., Trans. Am. Inst. Chem. Engrs. 31, 365 (1935).

Lamb, W. B., Ph.D. Thesis in Chemical Engineering, University of Delaware, (1965).

Springer, T. G., Ph.D. Thesis in Chemical Engineering, University of California, Berkeley, (1969).

Whitaker, S. L., and Pigford, R. L., A.I.Ch.E. Journal 12, 741 (1966).

LIST OF FIGURES

Fig. 1. Diagram of an interface impedance bridge.

Fig. 2. Analogous A.C. impedance bridge [capacitors are varied together sinusoidally; voltage difference, $\Delta E = \Delta\hat{E} \exp(i\omega t)$].

Fig. 3. Photograph of interface impedance bridge.

Fig. 4. Photograph of reciprocating drive mechanism.

Fig. 5. Bridge comparison of a stationary water interface with an impermeable surface. (The straight line is computed from Eq. (9) using accepted values of SO_2 solubility and diffusion coefficient.)

Fig. 6. Bridge comparison of a turbulent water interface with an impermeable surface. (Data for SO_2 passing into surface of a stirred pool of water. The apparent value of S is about 2.96 sec.$^{-1}$)

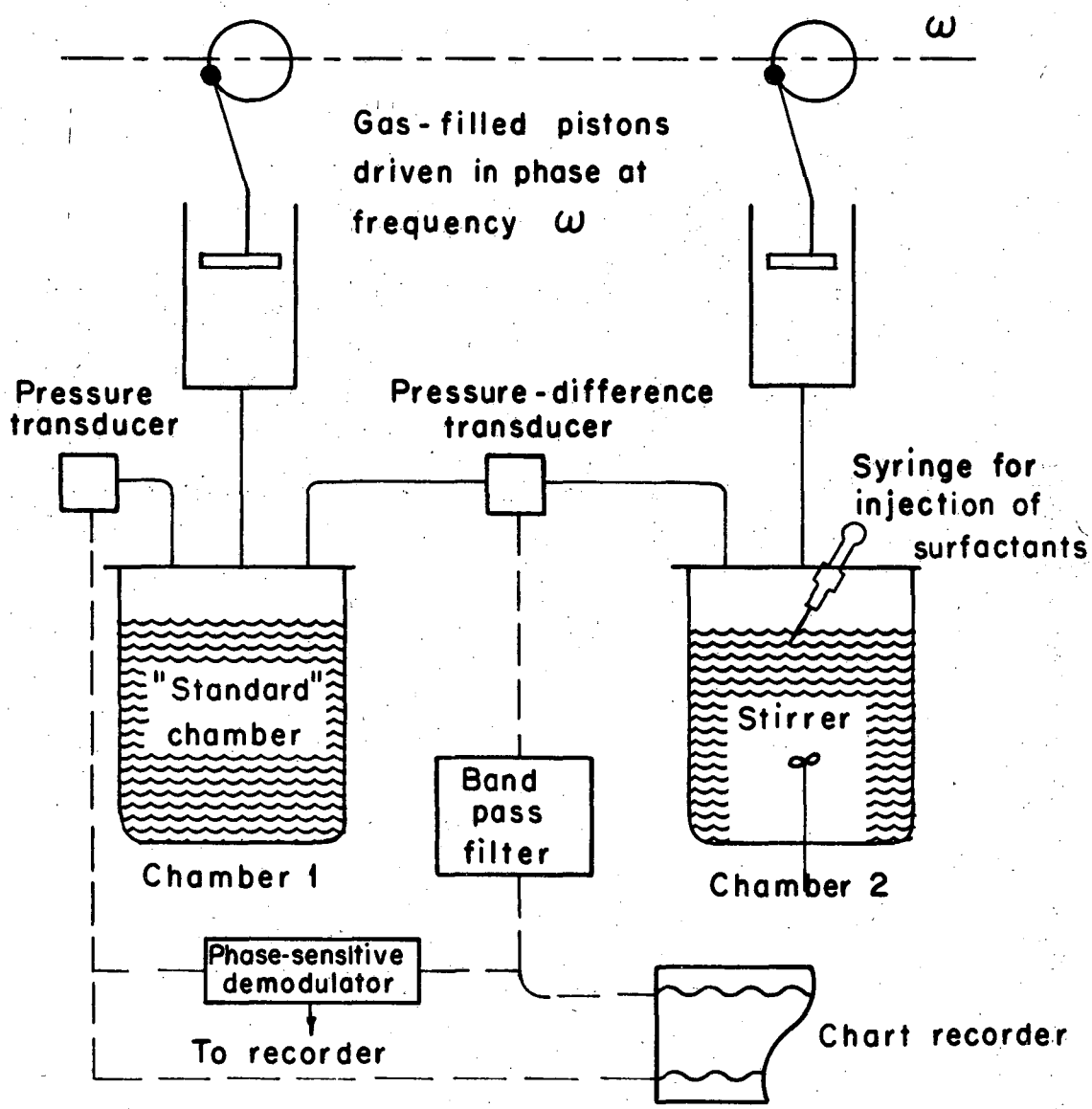

XBL695-2743

Fig. 1.

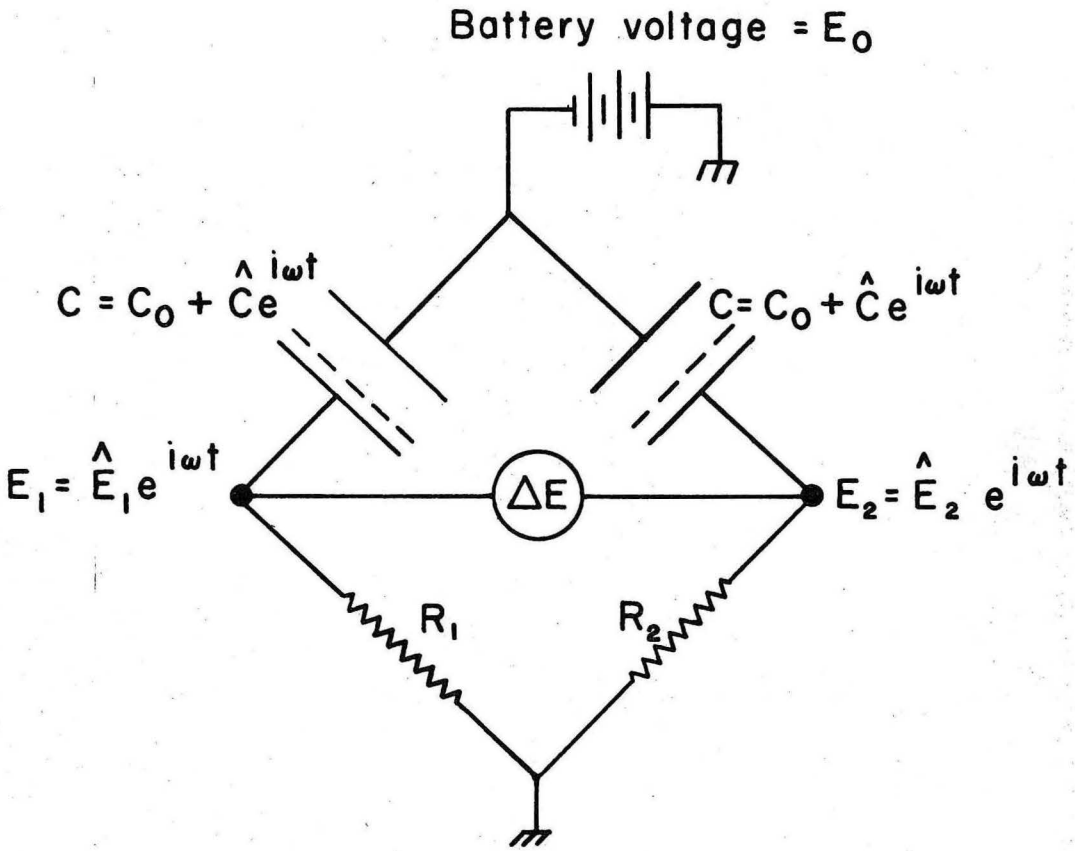

$$\frac{\widehat{\Delta E}}{\hat{E}_2} = \frac{(1/C_0)\left(\frac{1}{r_2} - \frac{1}{r_1}\right)}{i\omega + \frac{1}{C_0 r_1}}$$

XBL695-2746

Fig. 2.

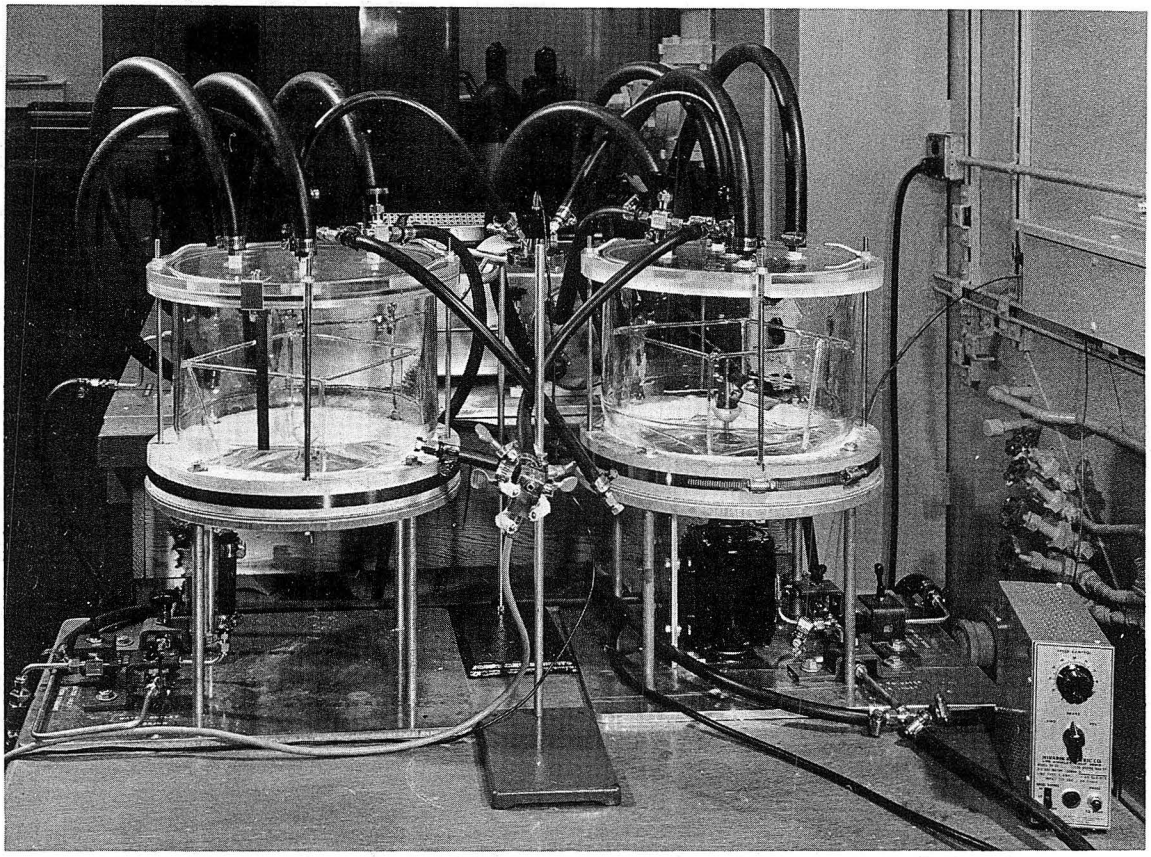

XBB 693-1581

Fig. 3.

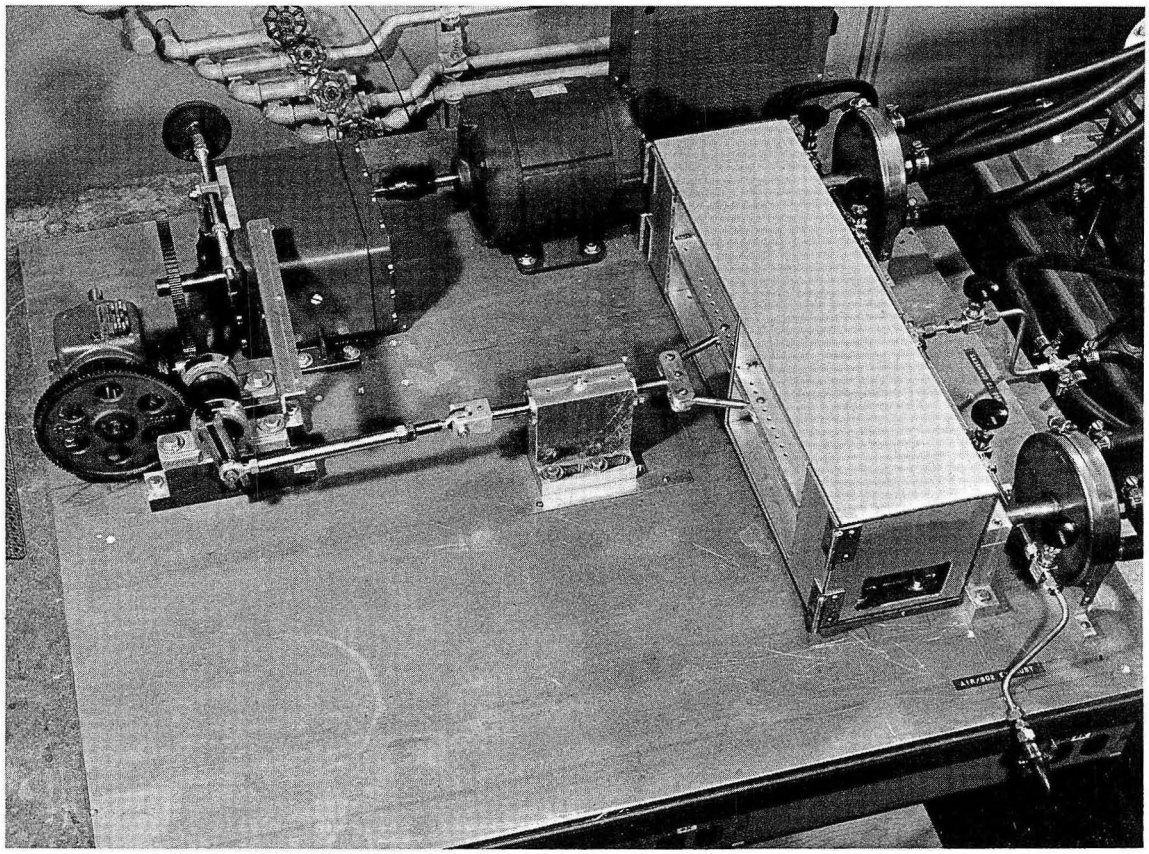

XBB 693-1582

Fig. 4.

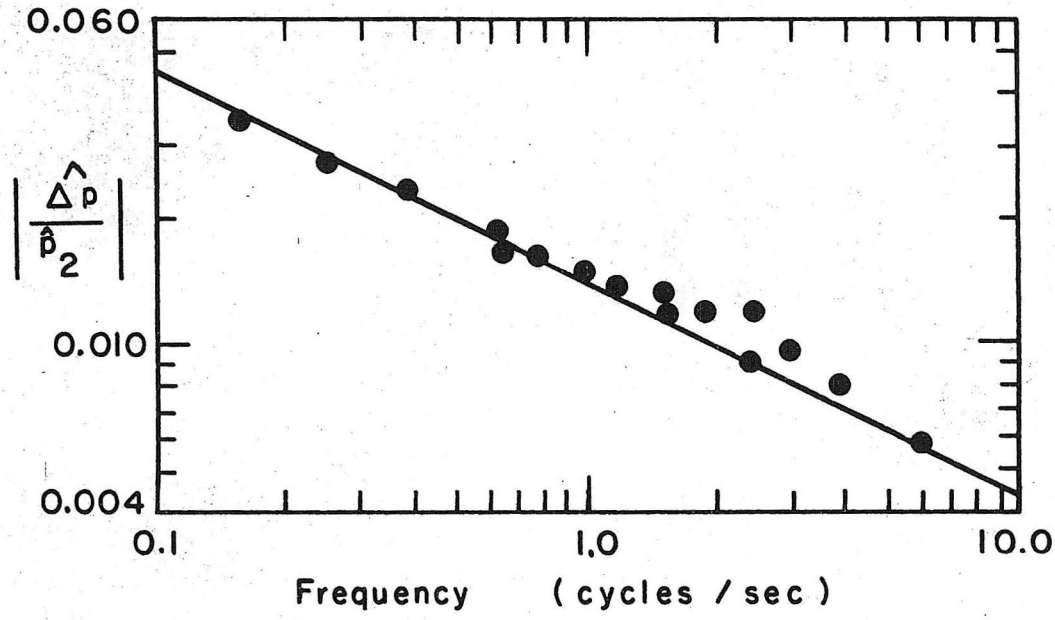

XBL 695-2745

Fig. 5.

LEGAL NOTICE

This report was prepared as an account of Government sponsored work. Neither the United States, nor the Commission, nor any person acting on behalf of the Commission:

A. Makes any warranty or representation, expressed or implied, with respect to the accuracy, completeness, or usefulness of the information contained in this report, or that the use of any information, apparatus, method, or process disclosed in this report may not infringe privately owned rights; or

B. Assumes any liabilities with respect to the use of, or for damages resulting from the use of any information, apparatus, method, or process disclosed in this report.

As used in the above, "person acting on behalf of the Commission" includes any employee or contractor of the Commission, or employee of such contractor, to the extent that such employee or contractor of the Commission, or employee of such contractor prepares, disseminates, or provides access to, any information pursuant to his employment or contract with the Commission, or his employment with such contractor.

TECHNICAL INFORMATION DIVISION
LAWRENCE RADIATION LABORATORY
UNIVERSITY OF CALIFORNIA
BERKELEY, CALIFORNIA 94720