Presented at the International Cyclotron
Conference, Oxford, England,
September 17-19, 1969

UCRL-18934
Preprint

RECEIVED
LAWRENCE
RADIATION LABORATORY
DEC 5 1969
LIBRARY AND
DOCUMENTS SECTION

OPERATION OF THE POLARIZED-ION SOURCE AND AXIAL INJECTION SYSTEM FOR THE BERKELEY 88-INCH CYCLOTRON

D. J. Clark, A. U. Luccio, F. Resmini, and H. Meiner

October 1969

AEC Contract No. W-7405-eng-48

TWO-WEEK LOAN COPY

This is a Library Circulating Copy which may be borrowed for two weeks. For a personal retention copy, call Tech. Info. Division, Ext. 5545

UCRL-18934

DISCLAIMER

This document was prepared as an account of work sponsored by the United States Government. While this document is believed to contain correct information, neither the United States Government nor any agency thereof, nor the Regents of the University of California, nor any of their employees, makes any warranty, express or implied, or assumes any legal responsibility for the accuracy, completeness, or usefulness of any information, apparatus, product, or process disclosed, or represents that its use would not infringe privately owned rights. Reference herein to any specific commercial product, process, or service by its trade name, trademark, manufacturer, or otherwise, does not necessarily constitute or imply its endorsement, recommendation, or favoring by the United States Government or any agency thereof, or the Regents of the University of California. The views and opinions of authors expressed herein do not necessarily state or reflect those of the United States Government or any agency thereof or the Regents of the University of California.

OPERATION OF THE POLARIZED-ION SOURCE AND AXIAL INJECTION SYSTEM FOR THE BERKELEY 88-INCH CYCLOTRON*

D. J. Clark, A. U. Luccio,† F. Resmini,† H. Meiner‡

Lawrence Radiation Laboratory

Berkeley, California 94720, U.S.A.

*Work performed under the auspices of the U.S. Atomic Energy Commission.

†On leave of absence from the University of Milan, Milan, Italy.

‡On leave of absence from the University of Basel, Basel, Switzerland.

OPERATION OF THE POLARIZED-ION SOURCE AND AXIAL INJECTION SYSTEM FOR THE BERKELEY 88-INCH CYCLOTRON*

D. J. Clark, A. U. Luccio†, F. Resmini†, and H. Meiner‡

Lawrence Radiation Laboratory
University of California
Berkeley, California 94720, U.S.A.

ABSTRACT

A polarized-ion source for protons and deuterons is now in operation at the Berkeley 88-Inch Cyclotron. The source is of the atomic beam type, using rf transitions and a strong field ionizer. It is mounted vertically above the cyclotron roof shielding. A new axial injection transport system, whose optical elements are electrostatic quadrupole triplets, brings the beam 4.5 meters down to the cyclotron median plane. A duoplasmatron source can inject unpolarized protons through a 90° bending magnet. A gridded electrostatic mirror inflects the beam into the dummy dee. Electrodes inserted into the dummy dee and dee give narrow accelerating gaps to allow the beam to clear the mirror. They are designed to unplug at vacuum for easy conversion between axial injection and internal source operation. Maximum beam currents at present are up to 3 μA of polarized protons at the source, 0.05 μA accelerated in the cyclotron, and 0.02 μA external beam with a polarization of 70%.

---

*Work performed under the auspices of the U. S. Atomic Energy Commission.

†On leave of absence from the University of Milan, Milan, Italy.

‡On leave of absence from the University of Basel, Basel, Switzerland.

1. INTRODUCTION

The first objective of the external injection system for the 88-Inch Cyclotron is to provide high intensity beams of polarized protons and deuterons from the cyclotron. The previous polarized proton beam, produced by α-p scattering, had an intensity of 0.02 nA. Using a polarized source one can obtain at least 20 nA external beam with much better beam quality and energy resolution.

Another requirement for the system is that it should be capable of pulsing unpolarized beams on a nanosecond to microsecond time scale. For this type of operation, high peak intensity beams are required, and space charge forces become important. Later, heavy ions will be injected.

The requirement for the transport line to the median plane is that it should provide flexible matching between the emittances of various ion sources and the acceptance phase space of the cyclotron. It should transmit both low and high intensity beams with good efficiency, and provide fast monitoring of beam intensity and size along the line.

The inflection and center acceleration electrodes should transport the beam with high efficiency and low distortion into a centered cyclotron orbit. The conversion from internal to external source should be as fast as possible, because of the heavy demands on cyclotron time.

The following sections describe the new system which has been designed and installed since the original axial injection test of 1966.[1]

2. THE POLARIZED-ION SOURCE

A polarized-ion source, shown in Fig. 1, was constructed to

FIGURE 1

provide DC beams for injection.[2] To allow for future development it is designed for easy replacement of components and has a large pumping capacity to handle high gas loads. It is located in a low radiation area above the cyclotron shielding roof for convenient maintenance and development. Its axis is vertical, to match the injection line without spin rotation. A brief description of the source follows.

The atomic beam of hydrogen or deuterium is produced in an rf dissociator powered by a self-excited oscillator. After collimation by 3 apertures the beam passes through a 50 cm long sextupole magnet. Next it passes through the rf transition sections. For protons a weak field transition gives 1.0 theoretical vector polarization when the atomic beam is ionized in a strong magnetic field. For deuterons a weak field transition produces 0.67 theoretical vector polarization, and intermediate field rf transitions give tensor polarizations of ±1.0. Ionization of the separated atomic beam takes place in a strong field ionizer built by ANAC Company[3] and purchased as a system from ORTEC Corporation. Reversal of vector polarization of protons or deuterons is done by reversing the ionizer magnetic field. A high capacity pumping system is used.

3. THE AXIAL INJECTION TRANSPORT LINE

The beam transport line,[4] shown in Fig. 2, brings beams from the

FIGURE 2

ion sources 4.5 meters down to the cyclotron. It is composed of 3 sets of electric quadrupole triplet lenses. It accepts beams from either the polarized-ion source directly above on-axis, or from the duoplasmatron test source[5] through the 90° bending magnet.

The optics of the line[6] was designed to transport beams of up to 800 mm-mrad emittance at energies of 5-20 kV, and to allow flexible matching between the external beams and the cyclotron phase-space acceptance. Calculations on high current beams including space charge forces show[7] that this line will transmit 600-800 μA of protons if the beam has a suitable emittance shape.

Beam monitoring along the line is done by biased Faraday cups and phosphor plates mounted on air cylinders, and motor-driven X-Y scanning wires with oscilloscope readout. Several X-Y steering plates are mounted between quadrupoles. One set will later be used for fast beam pulsing. A sine-wave buncher is placed between the second and third triplets. It is a drift tube with a drift length of 3/2 of a cyclotron period. It is located near the cyclotron end of the line to minimize debunching from polarized-ion source energy spread. We use the sine-wave rather than the previously proposed sawtooth wave shape[8] because of its ease of construction, and because its performance would closely approach the sawtooth type after adding a higher harmonic drift tube.

The beam enters the cyclotron through a half-solenoid "hole lens", the region where the cyclotron magnetic field increases from near zero to its median plane value of 5-17 kG. Calculations of phase space beam trajectories[9] show that several modes of operation are possible, depending on injection energy, and cyclotron magnetic field. In the "λ mode" the hole lens can transform the phase space from a waist outside the lens to a similar waist in the median plane. In the "3/2 λ mode" the lens transforms a large cross-section beam to a small cross-section beam.

4. CYCLOTRON CENTRAL REGION

When the beam reaches the median plane of the cyclotron, it must be bent through 90 degrees into the horizontal plane and enter the dee accelerating gaps in such a way as to be centered radially on the cyclotron center. Simple calculations show[10] that if the beam is injected on the magnet axis and inflected toward the dummy dee, the ratio of injection voltage, V_i, to dee voltage, V_D, should be 0.2 for a single dee cyclotron with narrow accelerating gaps. This is a convenient ratio, since our highest dee voltage of 65 kV would mean 13 kV injection energy. On axis injection is also convenient because it avoids the problem of shimming the magnet leakage flux which would deflect the beam in off-axis injection.

To inflect the axial beam into the median plane, we use an electrostatic mirror oriented at 45 degrees to the median plane, which is shown in Fig. 3. As a grid we use a tungsten mesh woven with 0.025 mm

FIGURE 3

wire and 0.25 mm spacing, with an overall transparency of 60% for the two 45 degree traversals. The grid-electrode spacing is 5 mm. The inflector is mounted on a probe which is inserted through a hole in the lower pole, in place of the normal ion source.

To design the center region, orbit calculations in the median plane have been done with the Michigan State Pinwheel computer code on the first few particle revolutions. The first electric fields used were measured in the University of Maryland electrolytic tank facility.[11] The electrodes modeled those used in the 1966 axial injection test.[1] The results showed that there were electric field distortions from vertical baffles close to the beam. A new geometry was deisgned to reduce these distortions. The gaps are 180 degrees apart to minimize phase sensitivity. Narrow electrode gaps of 1 cm were used to give the beam enough acceleration to clear the inflector housing. For Pinwheel calculations the electric fields in the median plane were approximated by uniform fields perpendicular to the dee gap, using gaps somewhat larger than the electrode spacings. The calculations for this case showed the ratio of $V_i/V_D = 0.18$, very close to the 0.2 of the simple calculation.

The resulting geometry is shown in plan view in Fig. 4, along with

FIGURE 4

the calculated orbit for the highest energy α-particle beam. A baffle across the median plane in the dee shields the beam from the dee-mirror electric field. A "half-turn collimator" is provided in the dummy dee to select phase on the first turn, but is normally retracted for

polarized-ion injection, because maximum transmission is desired. A photo of the center region is shown in Fig. 5.

FIGURE 5

This axial injection geometry is not compatible with the normal internal ion source, since the source would have to come through the dummy dee. So a "plug-in" concept was adopted, in which the central parts of the dee and dummy dee out to a 14 cm radius, the "inserts", are removable at vacuum through the dee stem. The dee insert is mounted on a tray in the dee, similar to that holding the normal puller, as shown in Fig. 6. The dummy dee insert is held by ball detents in the main

FIGURE 6

section of the dummy dee, which is bolted to the poles. It can be removed by a tool tray through the dee stem. The material of the inserts and dummy dee is inconel, which is a high temperature nickel alloy with good high voltage characteristics.

At the same time that a new axial injection center region was designed, a center region for the internal source had to be provided. The plug-in facility allows a wide choice of center geometry. We decided to try a narrow gap design here also, as shown in Fig. 7. The structure

FIGURE 7

is again based on 180 degree symmetry. The design provides a source-puller set-back as in the original design to give electric focusing, and a "half-turn" collimator to clip the phase to 6 degrees as required for some experiments. One interesting feature is a sliding edge on the dummy dee insert, moved by a pin on the ion source, to maintain 180 degree symmetry for various ion source and puller positions.

Operational experience with the inserts show that they can be changed in about 2 hours. There have been occasional problems with engaging the ion source pin in the sliding edge upon source insertion. There has been slight insert melting near the puller, and on the first half turn on the dee insert during a bad vertical misalignment of source and puller. Maximum beam currents are as large as before: hundreds of μA of protons, He^3, and α-particles accelerate well, and intensity is normally limited by septum power dissipation. Careful transit surveys of the source and puller heights have shown that the source rises gradually 1 mm when the main magnet current increases, and the dee and puller drop gradually 0.25 mm as the rf power increases. These surveys are used to get a vertical alignment of 0.25 mm between source and puller, since larger misalignments are observed to cause large vertical beam oscillations, and heating of the top or bottom of the inserts.

5. OPERATION OF POLARIZED SOURCE AND AXIAL INJECTION SYSTEM

The first test of the entire system of polarized-ion source, axial injection system, and cyclotron acceleration was in April 1969. In that test the source gave 700 nA of polarized protons, and there was an extracted beam of 1.5 nA of 20 MeV protons. The polarization was measured

as 80% in Cave 4. Since then some improvements have been made. The atomic beam collimator apertures have been optimized. The ionizer alignment has been improved, and a quartz dissociator tube has been installed, to replace the pyrex tube. The best results of system operation to August 1969 are given in Table I. The polarization was measured in

TABLE I

Cave 5 by scattering from carbon at 16.7 MeV.

6. ACKNOWLEDGMENTS

We wish to thank all those who helped with this work, particularly Dr. H. Conzett for guidance and encouragement, Dr. J. Thirion for helpful comments on source construction, Dr. R. Plattner for help in source operation; Drs. A. Bacher and R. de Swiniarski for measurement of polarization; Dr. H. Glavish for help with ionizer operation; D. Morris, D. Elo, A. Carneiro, A. Hartwig, and L. Bell of mechanical engineering; P. Frazier, M. Renkas, and W. Flood of electronic engineering; F. Hart and D. Stiver of the mechanical shop; J. Bowen and the cyclotron crew.

REFERENCES

1. R. Burger, et al., IEEE Trans. Nucl. Sci. NS-13, No. 4, 364 (1966).
2. A. U. Luccio, et al., UCRL-18607 (1969), and IEEE Trans. Nucl. Sci. NS-16, No. 3, 140 (1969).
3. H. F. Glavish, Nucl. Instr. Methods 65, 1 (1968).
4. D. J. Clark, et al., UCRL-18608 (1969), and IEEE Trans. Nucl. Sci. NS-16, No. 3, 471 (1969).
5. C. D. Moak, et al., Rev. Sci. Instr. 30, 694 (1959).
6. F. Resmini, UCRL-18442 (1968).
7. F. Resmini, et al., UCRL-18596 (1969), and IEEE Trans. Nucl. Sci. NS-16, No. 3, 465 (1969).
8. F. Resmini, et al., UCRL-18125 (1968).
9. A. U. Luccio, UCRL-18016 (1968).
10. D. J. Clark, Rutherford Lab. Design Note CDN-500-05-024 (1962).
11. University of Maryland, Department of Physics, courtesy of Prof. M. Reiser.

TABLE I. System Tests with 22 MeV Protons.

	Ion source		
	Polarized		Duoplasmatron
Injection energy	12 keV	12 keV	10 keV
Source current, FC_0	1.4 μA	2 μA	40 μA
Accelerated current	50 nA	145 nA	3.6 μA
External current	20 nA	60 nA	1.8 μA
Transmission: Source-ext. beam	1.5 %	3 %	4.5 %
Polarization	70 %	80 %	0
Buncher used?	No	Yes	No

FIGURE CAPTIONS

Fig. 1. Polarized-ion source schematic cross-section, showing principal components and vacuum pump ports.

Fig. 2. Axial injection transport line schematic cross-section, showing components. Note that one quadrupole triplet lens has been omitted.

Fig. 3. Inflector housing. Exit slot at center brings beam into dummy dee. Material is inconel.

Fig. 4. Axial injection center region plan view, showing smallest beam trajectory for maximum energy α-particles. "Plug-in" dee and dummy dee inserts are shown.

Fig. 5. Photo of axial injection center region when set up prior to installation, showing dummy dee with insert, inflector, and dee with insert.

Fig. 6. Dee insert for axial injection mounted on its tray. Material is inconel.

Fig. 7. New internal ion source center region plan view, showing beam trajectories for lowest and highest energy beams. Note sliding edge on dummy dee insert, moved by pin on anode.

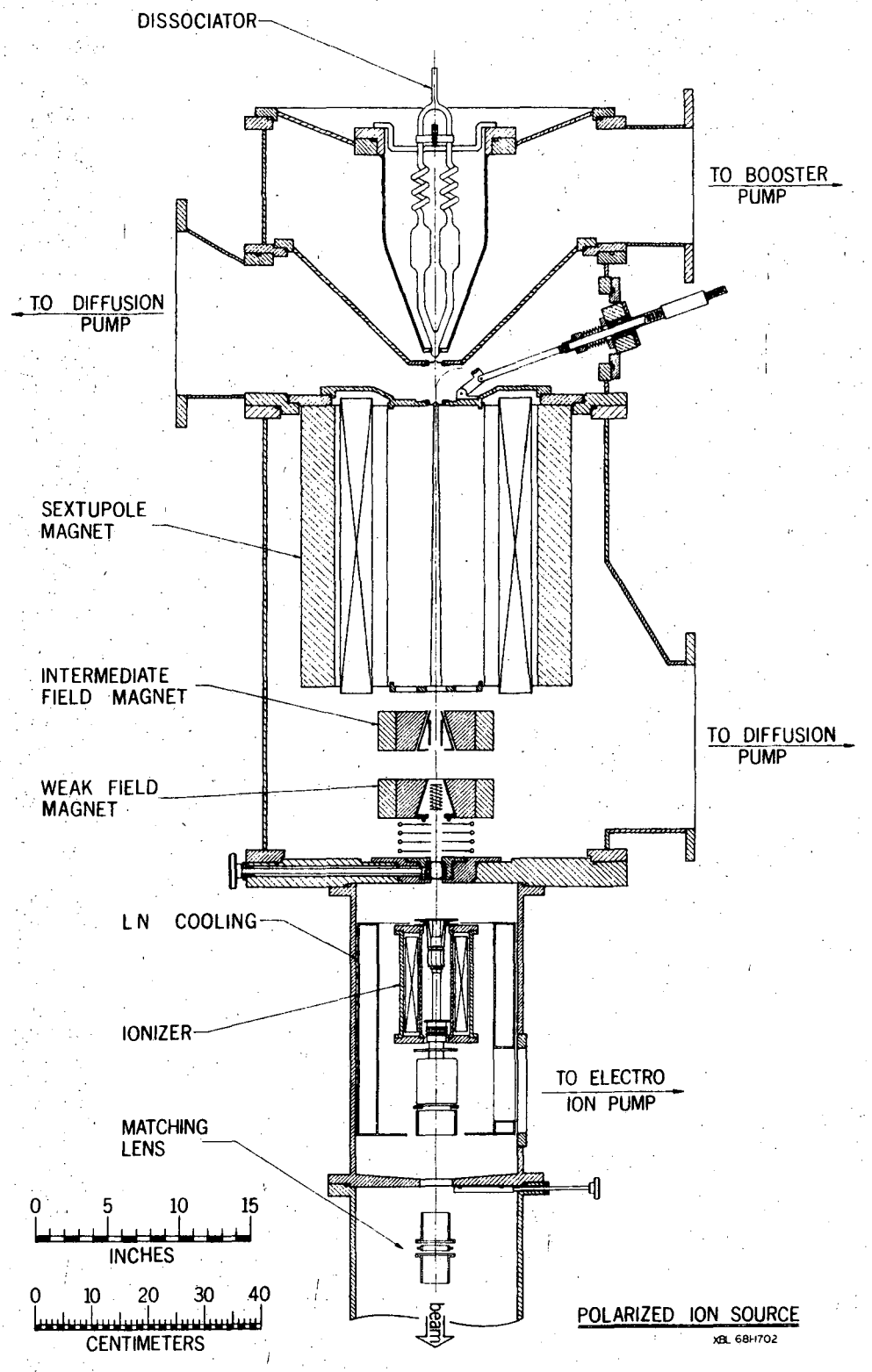
DISSOCIATOR
TO BOOSTER PUMP
TO DIFFUSION PUMP
SEXTUPOLE MAGNET
INTERMEDIATE FIELD MAGNET
TO DIFFUSION PUMP
WEAK FIELD MAGNET
L N COOLING
IONIZER
TO ELECTRO ION PUMP
MATCHING LENS
0 5 10 15
INCHES
0 10 20 30 40
CENTIMETERS
beam
POLARIZED ION SOURCE
XBL 68H702

Fig. 1

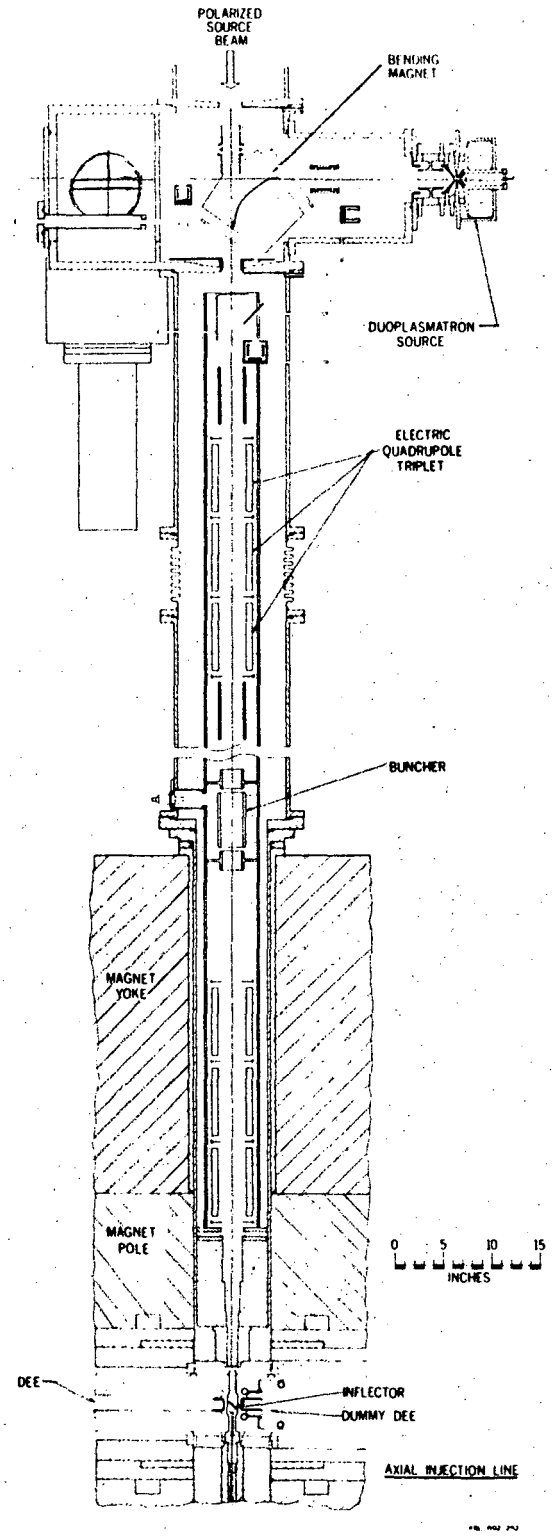
POLARIZED SOURCE BEAM
BENDING MAGNET
DUOPLASMATRON SOURCE
ELECTRIC QUADRUPOLE TRIPLET
BUNCHER
MAGNET YOKE
MAGNET POLE
0 5 10 15
INCHES
DEE
INFLECTOR
DUMMY DEE
AXIAL INJECTION LINE

Fig. 2

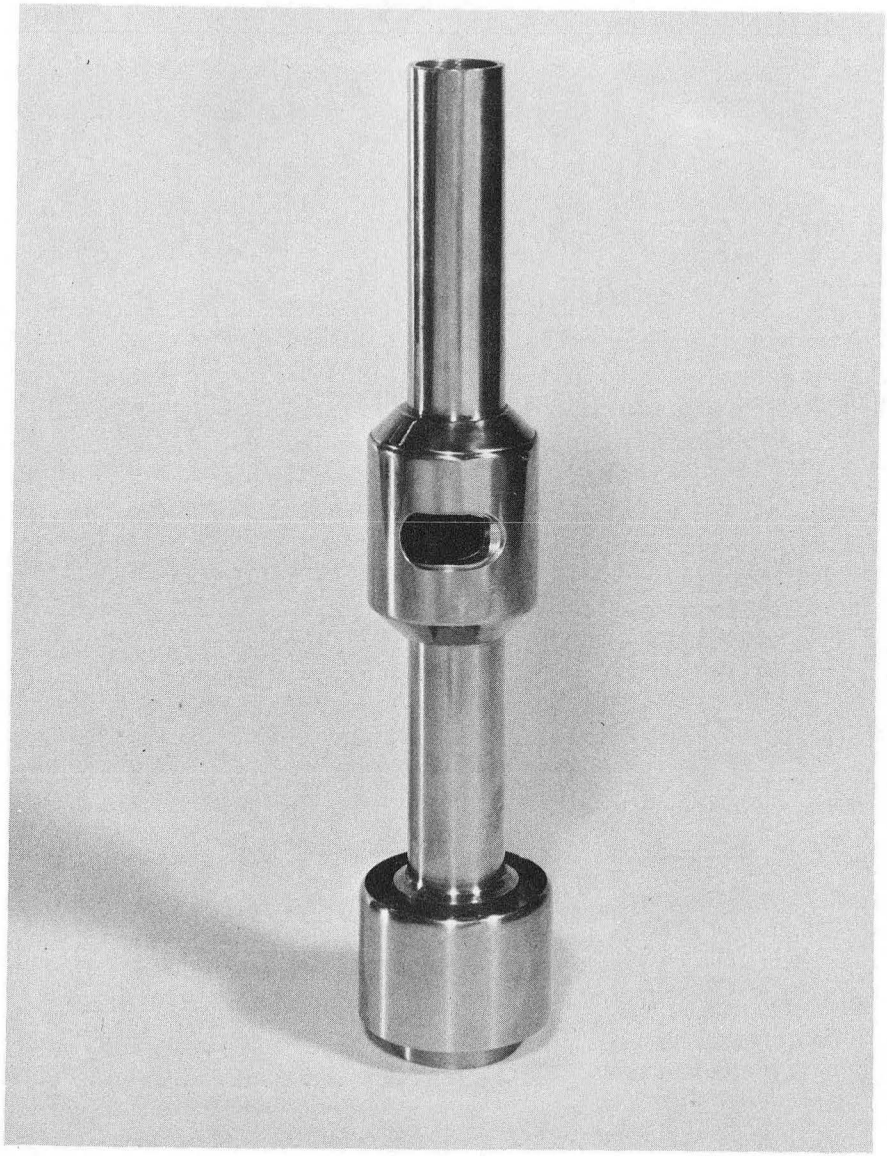

XBB 695-2887

Fig. 3

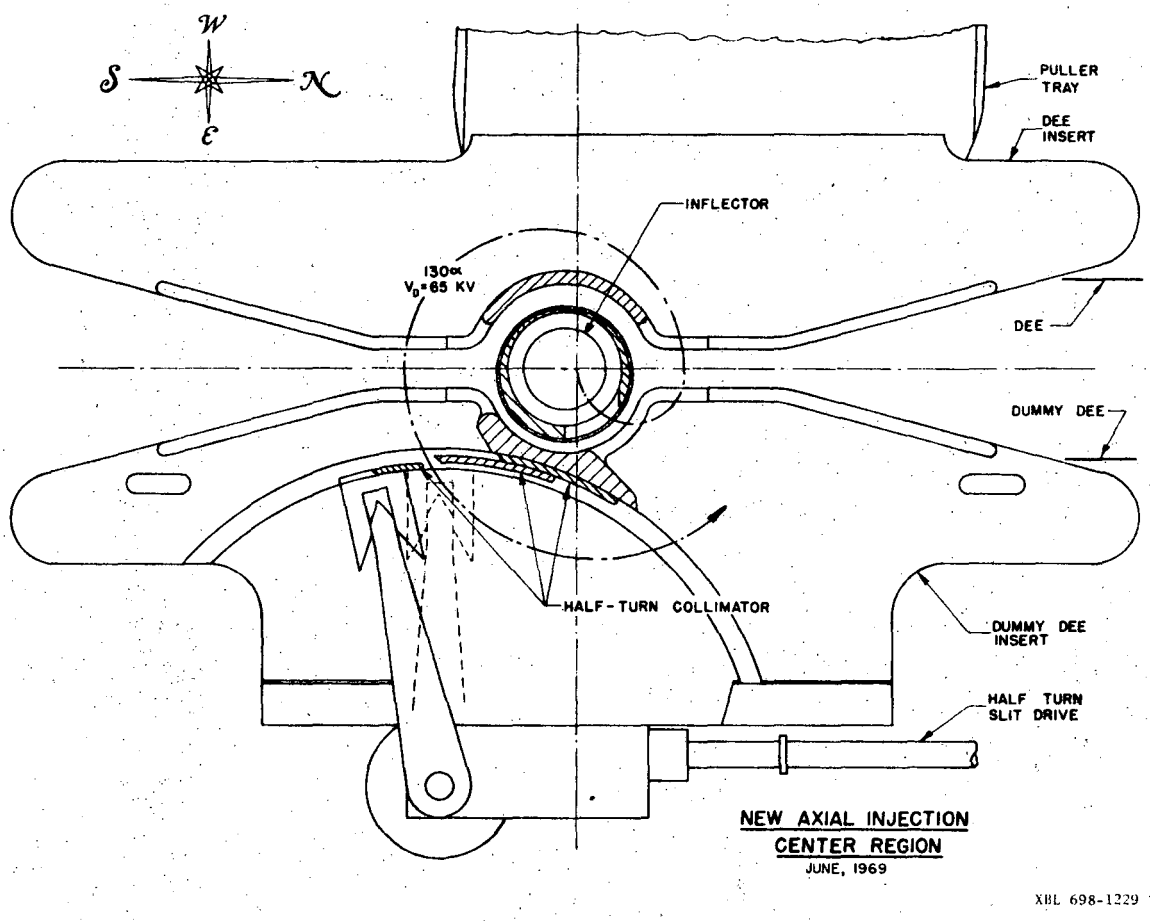
W
S
N
E
PULLER TRAY
DEE INSERT
INFLECTOR
130°
V_D=65 KV
DEE
DUMMY DEE
HALF-TURN COLLIMATOR
DUMMY DEE INSERT
HALF TURN SLIT DRIVE
NEW AXIAL INJECTION
CENTER REGION
JUNE, 1969
XBL 698-1229

Fig. 4

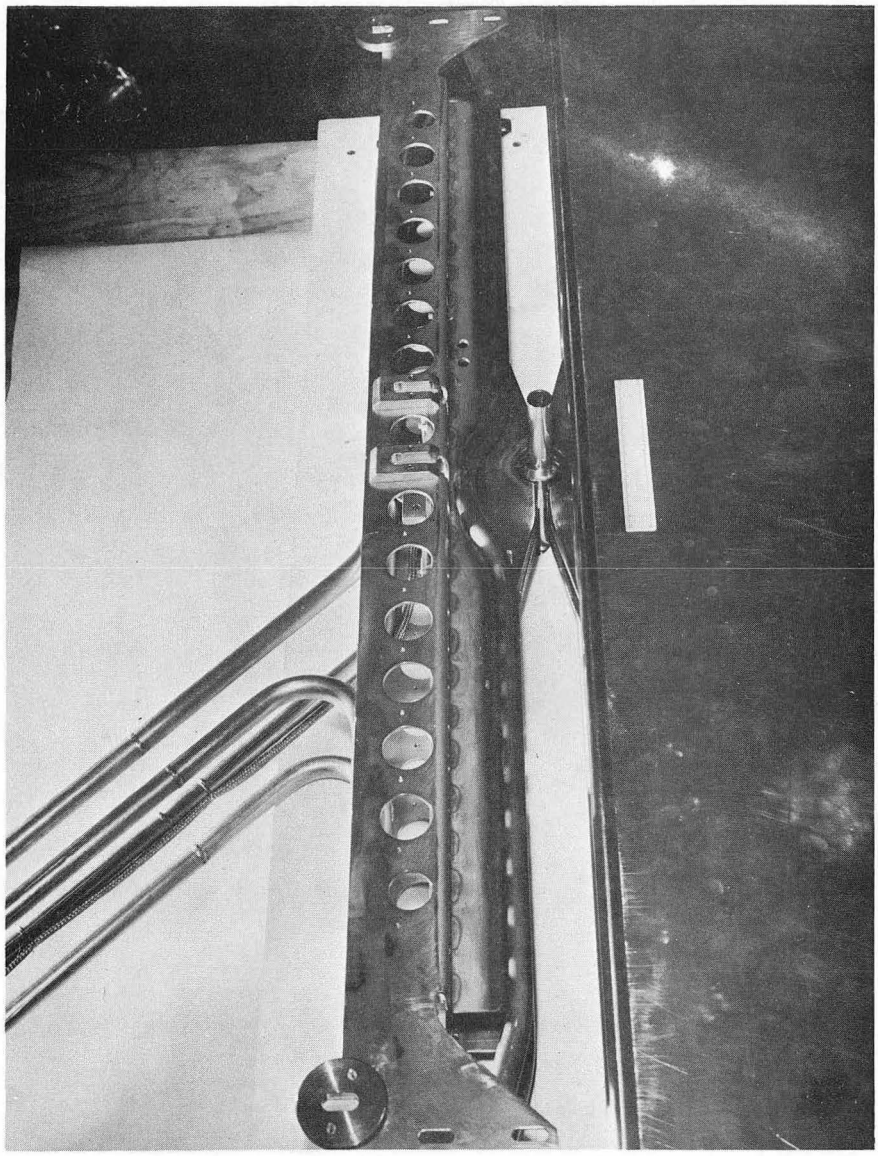

CBB 695-3150

Fig. 5

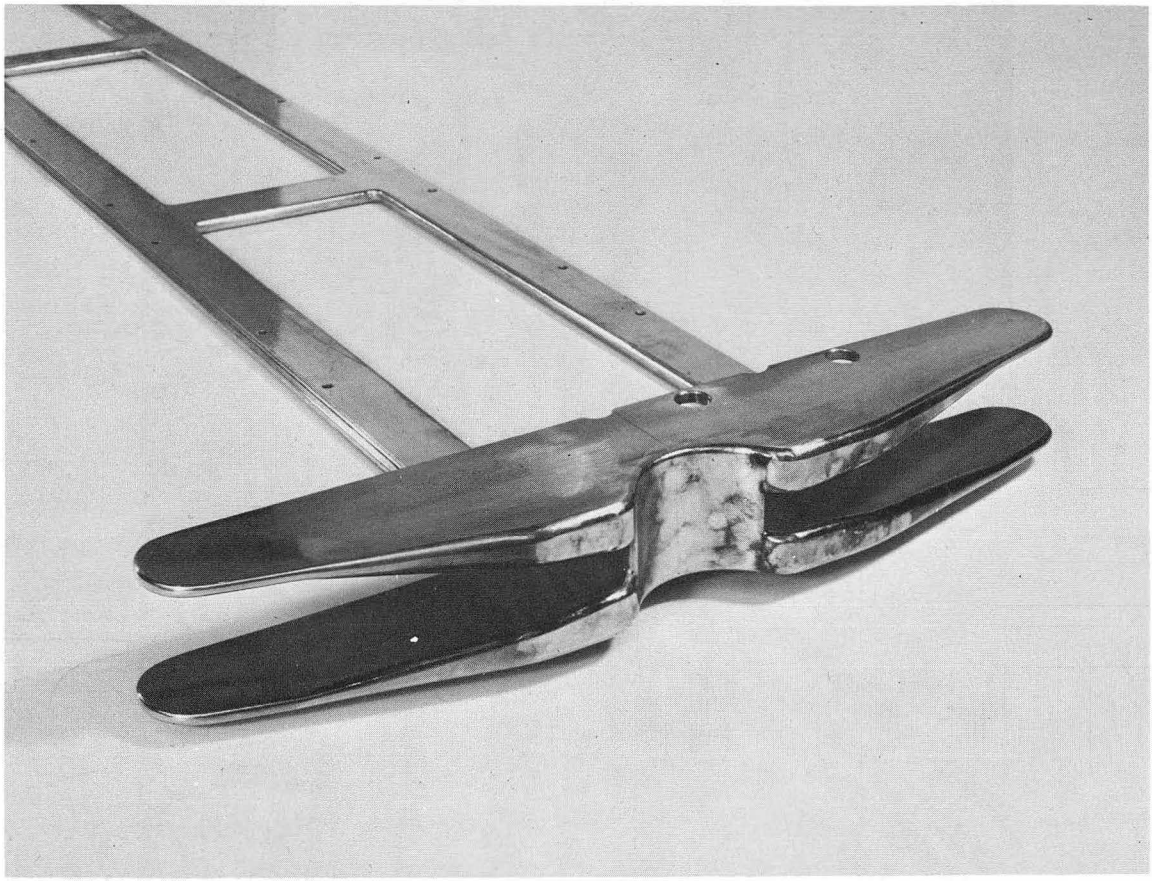

XBB 695-2882

Fig. 6

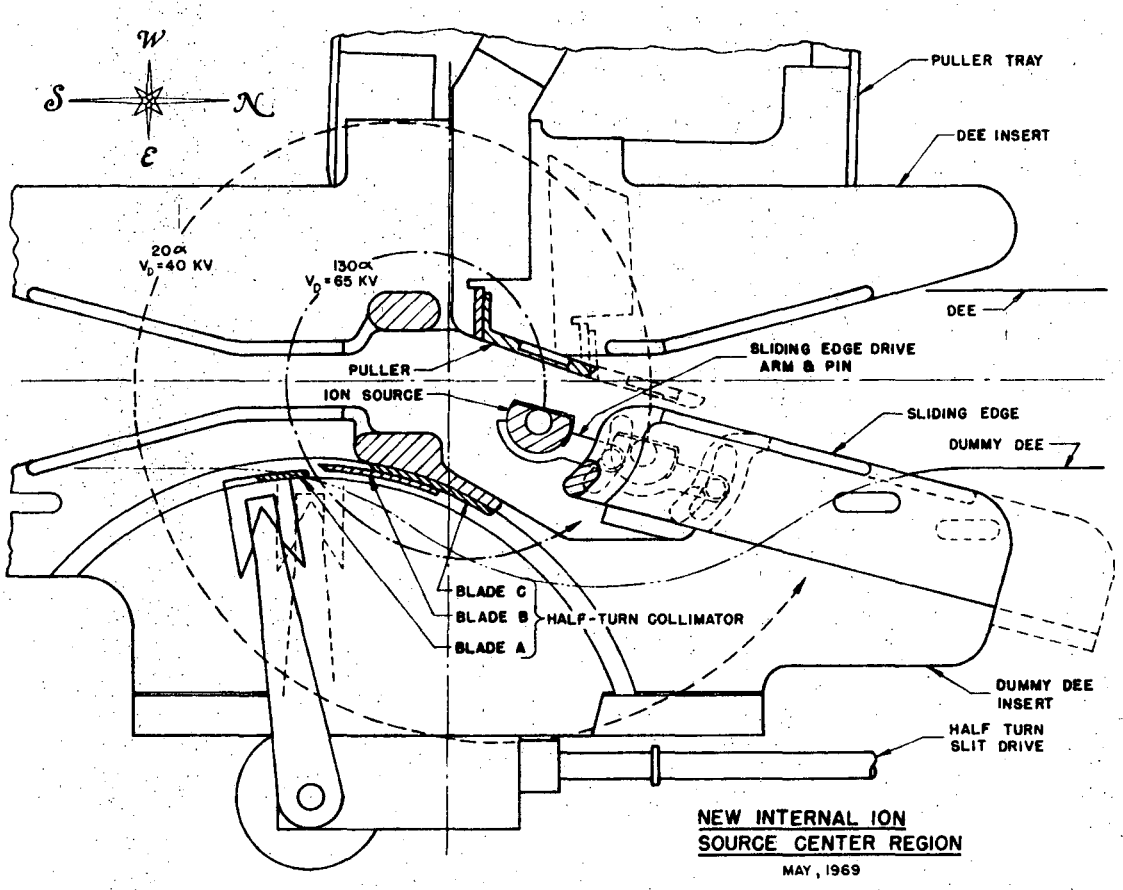

XBL 698-1231

Fig. 7

LEGAL NOTICE

This report was prepared as an account of Government sponsored work. Neither the United States, nor the Commission, nor any person acting on behalf of the Commission:

A. Makes any warranty or representation, expressed or implied, with respect to the accuracy, completeness, or usefulness of the information contained in this report, or that the use of any information, apparatus, method, or process disclosed in this report may not infringe privately owned rights; or

B. Assumes any liabilities with respect to the use of, or for damages resulting from the use of any information, apparatus, method, or process disclosed in this report.

As used in the above, "person acting on behalf of the Commission" includes any employee or contractor of the Commission, or employee of such contractor, to the extent that such employee or contractor of the Commission, or employee of such contractor prepares, disseminates, or provides access to, any information pursuant to his employment or contract with the Commission, or his employment with such contractor.

TECHNICAL INFORMATION DIVISION
LAWRENCE RADIATION LABORATORY
UNIVERSITY OF CALIFORNIA
BERKELEY, CALIFORNIA 94720