To be published as Chapter in book
"Vacuum Microbalance Techniques"
Vol. 8, A. W. Caznderna, Ed.,
Plenum Press, N. Y.

UCRL-19017
Preprint

cy. 2

VACUUM MICROBALANCE APPARATUS FOR RAPID DETERMINATION OF LOW-TEMPERATURE VAPORIZATION RATES

RECEIVED
LAWRENCE
RADIATION LABORATORY

JUL 23 1969

LIBRARY AND
DOCUMENTS SECTION

J. Gordon Davy

July 1969

AEC Contract No. W-7405-eng-48

TWO-WEEK LOAN COPY

This is a Library Circulating Copy which may be borrowed for two weeks. For a personal retention copy, call Tech. Info. Division, Ext. 5545

UCRL-19017

LAWRENCE RADIATION LABORATORY
UNIVERSITY of CALIFORNIA BERKELEY

DISCLAIMER

This document was prepared as an account of work sponsored by the United States Government. While this document is believed to contain correct information, neither the United States Government nor any agency thereof, nor the Regents of the University of California, nor any of their employees, makes any warranty, express or implied, or assumes any legal responsibility for the accuracy, completeness, or usefulness of any information, apparatus, product, or process disclosed, or represents that its use would not infringe privately owned rights. Reference herein to any specific commercial product, process, or service by its trade name, trademark, manufacturer, or otherwise, does not necessarily constitute or imply its endorsement, recommendation, or favoring by the United States Government or any agency thereof, or the Regents of the University of California. The views and opinions of authors expressed herein do not necessarily state or reflect those of the United States Government or any agency thereof or the Regents of the University of California.

UCRL-19017

VACUUM MICROBALANCE APPARATUS FOR RAPID DETERMINATION OF LOW-TEMPERATURE VAPORIZATION RATES

J. Gordon Davy

Department of Chemistry
and Inorganic Materials Research Division,
Lawrence Radiation Laboratory,
University of California,
Berkeley, California 94720

ABSTRACT

Equipment has been built to allow study of the vaporization rate of materials at temperatures well below room temperature. The initial material to be studied was single-crystal ice, between -90° and -40°C.

The system employs a somewhat modified Cahn UHV/RG Electrobalance (R), mounted in a stainless steel vacuum chamber which can be cooled to liquid nitrogen temperature. For low-temperature studies, it is necessary to know quite accurately the sample temperature, and it has proved possible to connect a thermocouple to the sample without objectionably reducing balance sensitivity. A radiant heater, operated by a high-gain proportional controller, holds the sample temperature constant to within about 0.01°C.

The rate of vaporization is read directly by employing a self-built time derivative computer, which can read rates as low as 10 micrograms per minute. The computer makes it possible to investigate the vaporization kinetics of a material over three decades in rate, using a single sample, in a matter of hours. With the computer, it is possible to know exactly when steady-state conditions have been established.

In addition to studying the vaporization of a material in vacuum, it is often of interest to investigate the way that certain gases may affect the rate. It has proved possible with this equipment to introduce gases into the chamber at pressures up to 100 microns and use the direct rate readout to follow transient as well as steady-state effects.

I. Introduction

II. System Requirements

1. Vacuum

2. Thermometer

3. Balance

4. Heating

5. Rate Measurement

III. System Description

1. Sample Preparation

2. Chamber

3. Heating

4. Balance Temperature Coefficient

5. Time Derivative Computer

IV. Appendix

1. Filter

2. Differentiator

a. Passive

b. Active

I. INTRODUCTION

A study of a material's vaporization kinetics can yield valuable information about the nature of its surface under non-equilibrium conditions. Most vaporization studies to date have been carried out at room temperature or above. There are many materials of potential interest whose vaporization has not been studied because the necessary temperatures are too low for use of conventional equipment.

The system to be described was designed to undertake studies at these low temperatures. It has been used to investigate ice vaporization over the temperature range -90C to -40C, but should serve equally well for other materials down to perhaps LN temperatures.

II. SYSTEM REQUIREMENTS

In order to carry out meaningful free vaporization studies, under well-defined conditions in a reasonable length of time, certain requirements must be met:

1. Vacuum. The mean free path of molecules in the vicinity of the vaporizing surface must be large compared to the size of the sample, so that the rate is not diffusion-controlled. This means an ambient pressure below about 50 microns. In addition, the molecular flux striking the vaporizing surface must be negligible -- say 1% or less of the vaporizing flux -- or else its magnitude and identity must be known. Even then there are rarely enough condensation data to adequately predict the effect of a return flux, and so the best procedure is to minimize its value. This means that very little of the vaporizing flux should be allowed to return to the surface -- it must be effectively pumped.

2. Thermometer. At least some of the kinetic studies must determine absolute rather than relative rates. For on-line, real-time measurements, one frequently employs a vacuum microbalance, preferably one that will permit large total weight changes. The sample surface temperature must be known accurately and simultaneously. What is needed is a thermometry that does not interfere with the operation of the balance.

At high temperature, radiation may be relied upon for a no-contact thermometer -- one either uses pyrometry, or a thermocouple that is adjacent to, but not touching, the sample. Either method properly employed is suitable to measure surface temperature as long as the vaporization rate is small enough that surface cooling may be neglected or suitably accounted for.

Such techniques cannot be used at low temperatures, both because radiation is not adequate, and because the temperatures must be known much more accurately. The second system requirement, then, is a microbalance that will give satisfactory results even with a thermocouple attached to the sample.

3. Balance. The Cahn RG Electrobalance (R) is ideally suited for the job for the following reasons:

a. The sample remains virtually motionless during measurement, so that the effect of the thermocouple is a constant and does not affect measurements of weight change.

b. Its electrical output permits on-line real-time measurements, not only of the weight, but with suitable instrumentation, of the vaporization rate as well.

The thermocouple attachment feature of the Cahn Electrobalance has been reported before[1,2], but has not been adequately appreciated. The instrumentation for obtaining direct rate readout will be described later in this paper, as will be the balance's temperature coefficient.

4. Heating. In addition to knowing the temperature of the sample, it is necessary to be able to control it, and it would be desirable to control it to within 0.1C. The temperature reached by a sample in a vacuum is fixed by a heat-flow balance of conduction, radiation, and evaporative cooling. Ordinarily, it is desirable (and possible) to minimize conduction, because it can cause temperature inhomogeneities. The low-temperature limit attainable for a given material in a vacuum is determined by the success in reducing the radiation and/or conduction from the sample's surroundings, that is, in minimizing the amount of warm surroundings.

The high-temperature limit is set by the success in supplying adequate radiant energy to the surface. At both limits, there are the additional constraints of not impeding the vapor flow, not producing unmanageable temperature gradients, not making the equipment unwieldy, and making measurements in a reasonable time span. For ice, the temperature limits are roughly -90C and -40C.

5. Rate Measurement. The direct rate readout is desirable for the following reasons:

a. It makes it possible to tell for given conditions when steady state has been established, and to be assured that it is being maintained.

b. It makes possible the maximum efficiency of time and minimum loss of sample.

c. It makes it possible to investigate transient effects, such as might be caused by the exposure to a gas.

III. SYSTEM DESCRIPTION

The equipment to be described meets these stated criteria. Figure 1 shows a block diagram of the system. It should be noted that the thermocouple is embedded in the back surface of a cylindrical sample, and that vaporization occurs from the opposite front face. All but the vaporizing surface is wrapped in aluminum.

1. Sample Preparation. The techniques used to prepare a sample for a vaporization study will depend on the material. The procedure used for ice is outlined in Figure 2. The prepared sample is an oriented single crystal, with a single face of unvarying area exposed.

The ice is grown in the manner suggested by Jona and Scherrer.[3] The transparency and birefringence of ice permits selection and orientation of a single crystal by optical methods.[4] An aluminum sleeve is melted down into the ice, and the ice outside the sleeve is then chipped away. A 40-gage (0.003 in.) copper-constantan thermocouple is placed on the back face and frozen in place with a few drops of water. Aluminum foil is placed over the back and secured by a clip which also serves as a suspension hook.

While the sample is being installed in the vacuum chamber, it is partially surrounded by a miniature cold chamber which is removed just prior to pumpdown.

2. Chamber. Figure 3 shows the microbalance installed in the vacuum chamber. After the sample has been hung and the thermocouple connections

made, the window is put in place, the chamber is pumped down and then cooled by liquid nitrogen. (Complete cooling time is about 15 minutes.) Notice that the sample is hung quite near to the balance arm, in the same chamber, and several centimeters from the nearest wall. There is no long hangdown or tube, so that pumpdown rate and accessibility are maximized. The ambient pressure during normal operation is 10^{-6} torr.

3. Heating and Thermometry. Figure 4 shows the sample and environs more clearly. In order to minimize temperature gradients, it was found necessary to supply heat radiantly to the vaporizing surface. The heater is a small coil of wire, designed to offer the minimum impedance to the vapor flux. It supplies the necessary sublimation power to the vaporizing surface to maintain the desired temperature. The heater is driven by a proportional controller with a maximum gain of one million. (A 10 Ω length of #32 ga. nichrome wire is used; it can dissipate up to 40 watts.)

It is necessary to consider the temperature difference that may exist between the front and the back of the sample. At steady state, the temperature at any point is time invariant; this means that any heat flowing into a volume element must also flow out, and, by extension, on out of the sample by radiation or conduction. Choosing worst-case values for these heat losses allows an estimate for a temperature difference between front and back of 0.1C, and consequently the thermocouple reading is an entirely satisfactory measure of surface temperature.

4. Balance Temperature Coefficient. For meaningful results, the balance performance must not be affected by the temperatures of its surroundings. The Cahn RG has, over a small temperature range, a low

temperature coefficient. Outside this range, the coefficient gets progressively larger. Unless corrective measures are taken, a balance mounted in a cold chamber will slowly cool off. There are two ways to deal with this situation:

a. Hold the balance temperature within its permissible range. For many purposes it is sufficient to use a small heater wrapped aroung the torque motor support. (A 100Ω length of nichrome in fiberglass sleeving works nicely; a typical current is 150 mA AC and produces no measurable influence on balance operation. For greater temperature control, a thermocouple-driven SCR proportional controller can be used.)

b. Eliminate the temperature coefficient. For maximum experimental flexibility, it is possible to make certain wiring changes to eliminate the necessity of heating the balance. These changes are shown schematically in Figure 5. Detailed diagrams and instructions have been made available to the Cahn Division, Ventron Instruments, and may be obtained directly from them. Only one wire need be changed on the balance itself. The alternative circuit (Fig. 5c) requires no change on the balance, but has the disadvantage that the low side of the signal is no longer at ground. (An alternate voltage reference supply for the bridge circuit has been designed; its stability is considerably greater than original equipment. Detailed drawings are available from Cahn.)

The voltage follower employs a very inexpensive integrated circuit operational amplifier and an external power supply. It is not an essential, but it is fairly simple to install, and is desirable if a time derivative computer is to be employed, for with the alteration in wiring, changes in the Mass dial puts spikes into the derivative unless the follower is used.

5. Time Derivative Computer (Differentiator). The desirability of a direct rate readout has already been stated. The rate is of course the time derivative of the weight, and may be obtained electronically from the voltage developed across R' in Figs. 5b and 5c.

In principle, a time derivative computer, or differentiator, is a two-component device, also known as a high-pass filter (see Fig. 6). Further discussion of the practical considerations for a working differentiator are given in the Appendix.

The present system contains the balance as rewired (Fig. 5b) with the filter shown in Fig. A2 (without follower) and a differentiator similar to that shown in Fig. A4. The measured noise levels are: balance, ± 1μg; differentiator, ± 1μg/min.

IV. RESULTS AND SUMMARY

Figure 7 shows the results obtained for single crystal ice over the temperature range -90C to -40C. The points shown are representative of those obtained with a large number of samples; they were obtained using just two.

The equipment which has been described is capable of rapidly producing valuable information on the kinetics of low-temperature vaporization over a broad range of temperatures and rates. A satisfactory rate versus temperature curve can be obtained with one sample in an afternoon.

Acknowledgement: This work was performed under the auspices of the United States Atomic Energy Commission.

APPENDIX. FILTERS AND DIFFERENTIATORS

1. Filter. Differentiation tends to emphasize the noise in a signal, and so it is necessary to remove the high-frequency components of the balance signal before it is supplied to the differentiator. A simple passive low-pass filter to do this job is shown in Fig. A1. It will be seen that this filter is the inverse of the differentiator, and it may be thought of as integrating out the higher frequency noise. The time constant τ_i is equal to RC; (if R is in megohms, M, and C is in microfarads, μf, then τ_i will be in seconds). The larger the value of τ_i, the lower the noise and the lower the frequency at which attenuation begins. If τ_i is greater than a few seconds, the differentiator response becomes too sluggish. If more noise needs to be filtered out, it is possible to cascade several filters. Figure A2 shows a continuously variable, multiple-stage filter which (without the voltage follower) very satisfactorily filters the signal from the balance to the differentiator.

With a suitable follower as indicated, it could be used as an additional, external filter for the weight signal to the recorder if desired.

A follower features the possibility of gain, and an output impedance of less than one ohm. Thus any recorder (including a 10 mV. one) can be used; the only limitation is that it not exceed the follower's current capability. The true weight signal itself will be unattenuated for any amount of filtering chosen.

2. Differentiator. Differentiators can be passive or active; the features they have in common will be mentioned first. The output, e_{out}, is related to the input, e_{in} (from the balance) as follows: $e_{out} = RC \frac{d}{dt} e_{in}$. Here the product of R and C is called the differentiation time constant τ_d.

The current i that flows in the differentiator is given by: $i = C \frac{d}{dt} e_{in}$; it is independent of the value of R. If C is in microfarads, and $\frac{d}{dt} e_{in}$ is in microvolts per second (μV/sec); then i will be in picoamps (pA).

To consider the limits of the differentiator, it is necessary to state some conditions:

i) For the Cahn RG it is approximately true that the rate in μg/min. is numerically equivalent to the rate in μV/sec.

ii) The largest quality non-polar capacitor available has a value of 10 μf. Only polystyrene and mylar capacitors are suitable.

iii) The input impedance of a good one-mV. recorder is on the order of a megohm. Therefore the source resistance of the differentiator should not in the worst case exceed this value, and it is desirable to have it much smaller.

a. Passive differentiator.

In Fig. (6) suppose R = 1M and C = 10 μf. The time constant τ_d is then 10 seconds, and the rate necessary to produce a 1 mv. output is $\frac{1 \text{ mV}}{10 \text{ sec}}$ or 100μV/sec. The corresponding weight-rate is about 100μg/min, and the corresponding current flow is 1000pA, or 1nA. The passive differentiator features simplicity and absence of noise contribution; it tends to suffer from high output resistance, zero shifts and calibration difficulties.

b. Active differentiator.

If an operational amplifier is used in a circuit such as is shown in Fig. A3, the resulting active differentiator overcomes some of the problems inherent in the passive model. The differentiator currents

remain the same, and this means that the current noise and drift in the amplifier must not exceed a few picoamps. The only kind of device that meets this requirement is a solid state operational amplifier with a MOSFET input stage. (Models of this type are available from Analog Devices and Zeltex, at a unit price between \$25 and \$100.) Figures A4 and A5 give complete wiring diagrams for two possible designs, each with an effective maximum time constant of 200 seconds. Output impedances are low and equivalent noise and drift are on the order of 1μg/min.

Error and noise analysis.

When an active device is used, it is necessary to consider the effects of non-ideality, especially of noise and non-infinite gain. For a noise-free amplifier of open-loop gain A, the output e_{out} is given by $e_{out} = \tau_d p e_{in} \left[1 + \frac{\tau_d p}{A}\right]^{-1}$, where $p \equiv \frac{d}{dt}$, and the expression before the brackets is the ideal response. For balance work, $p \leq 1\ \mathrm{sec}^{-1}$, and so it is only necessary that $A \gg \tau_d$ (in sec.). If $\tau_d = 200$ sec., A should be greater than 2×10^4. Nearly all operational amplifiers fulfill this condition.

An amplifier has a non-infinite input impedance R_{in}, an offset voltage drift Δe_o and a bias current drift Δi_b. (It is assumed that the offsets themselves can be adjusted to zero.) If the value of the feedback resistor is R_d and the input capacitance is C_d, the error in the output can be written: $\Delta \equiv \Delta p e_{in} = \frac{1}{C_d}\left[\left(\frac{1}{R_d} + \frac{1}{R_{in}}\right)\Delta e_o + \Delta i_b\right]$. If $C_d = 10\mu f$, $R_d = 20M$, and $R_{in} \gg R_d$, then $\Delta \approx \frac{1}{10}\left[\frac{\Delta e_o}{20} + \Delta i_b\right]$. Thus an offset voltage drift of 20 μV plus a bias current drift of 10pA can combine to give an output error of 1.1μV/sec.

Footnotes

1. W. A. Riehl, Considerations on the Evaporation of Materials in Vacuum, Chemical Engineering Progress, Symposium Series 40: 103, (1963).

2. A. P. MacKenzie and B. J. Luyet, Appartus for the Automatic Recording of Freeze - Drying Rates at Controlled Specimen Temperatures, Biodynamics, 9:193, (1964).

3. F. Jona and P. Scherrer Elastic Constants of Single Crystal Ice (In German). Helv. Phys. Acta 25, 35-54 (1952).

4. Elizabeth A. Wood, Crystals and Light. Princeton: D. Van Nostrand Co., Inc., (1964).

Extra Figure Captions

Figure A2. Notes:

1. 4-gang potentiometer, 250K each.
2. Capacitors 10μf each.
3. Voltage follower not required if signal is supplied to differentiator.
4. If follower is used, "Gain" switch allows use of 10 mv. recorder if desired.

Figure A4. Selector switch "S2" allows use of 1 mv. or 10 mv. recorder; maximum output impedance ~2K.

Figure A5. Selector switch "S2" gives output impedance of 1Ω to 1 mv. recorder; 10Ω to 10 mv. recorder.

Figures A4 and A5.

1. Divider resistors should be 0.1% to assure 1% overall accuracy Feedback resistor should have low temperature coefficient.
2. Operational amplifier has a MOSFET input; maximum current noise and drift 10pA.

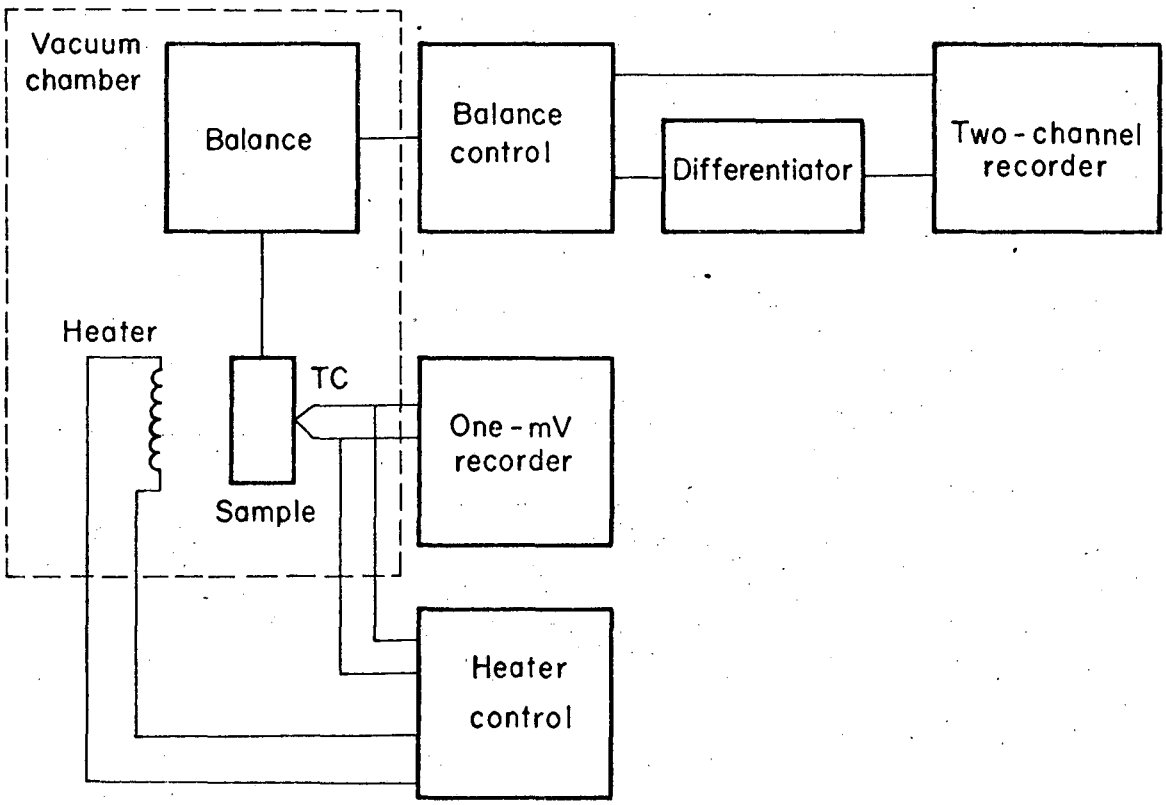

XBL695-2771

Figure 1. Low Temperature Vaporization System Block Diagram.

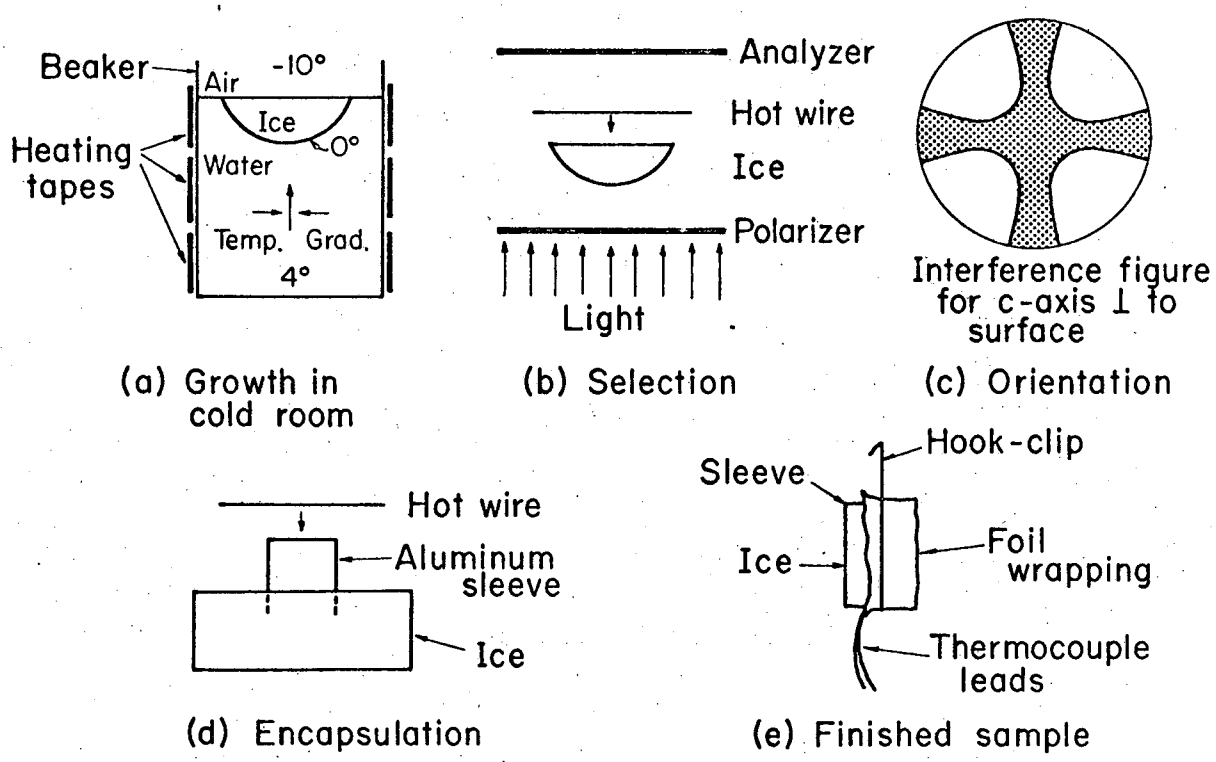

Preparation of oriented ice single crystals

XBL694-2488

Figure 2. Preparation of Oriented Ice Single Crystals.

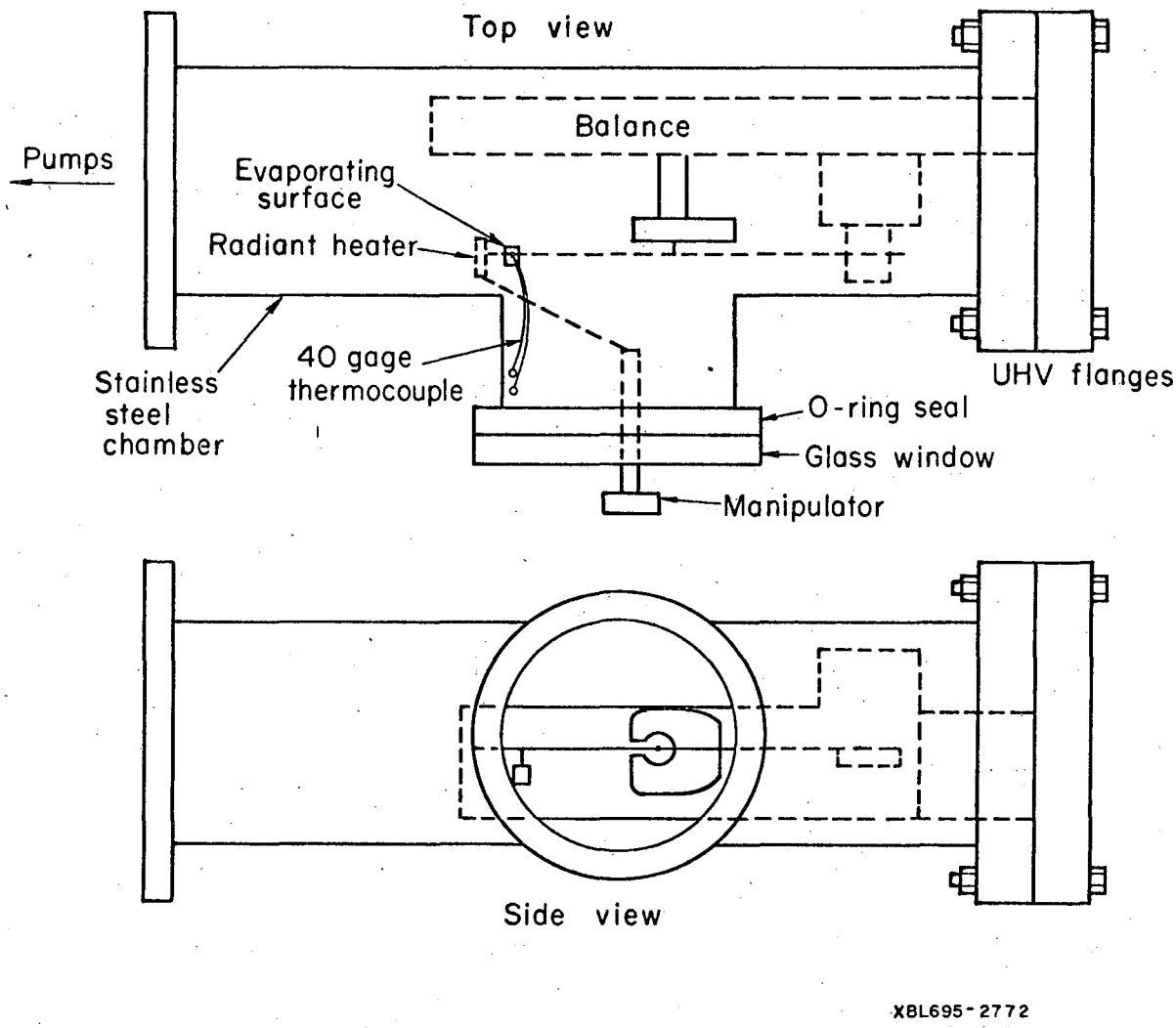

Figure 3. Microbalance Vacuum Chamber for Low Temperature Vaporization.

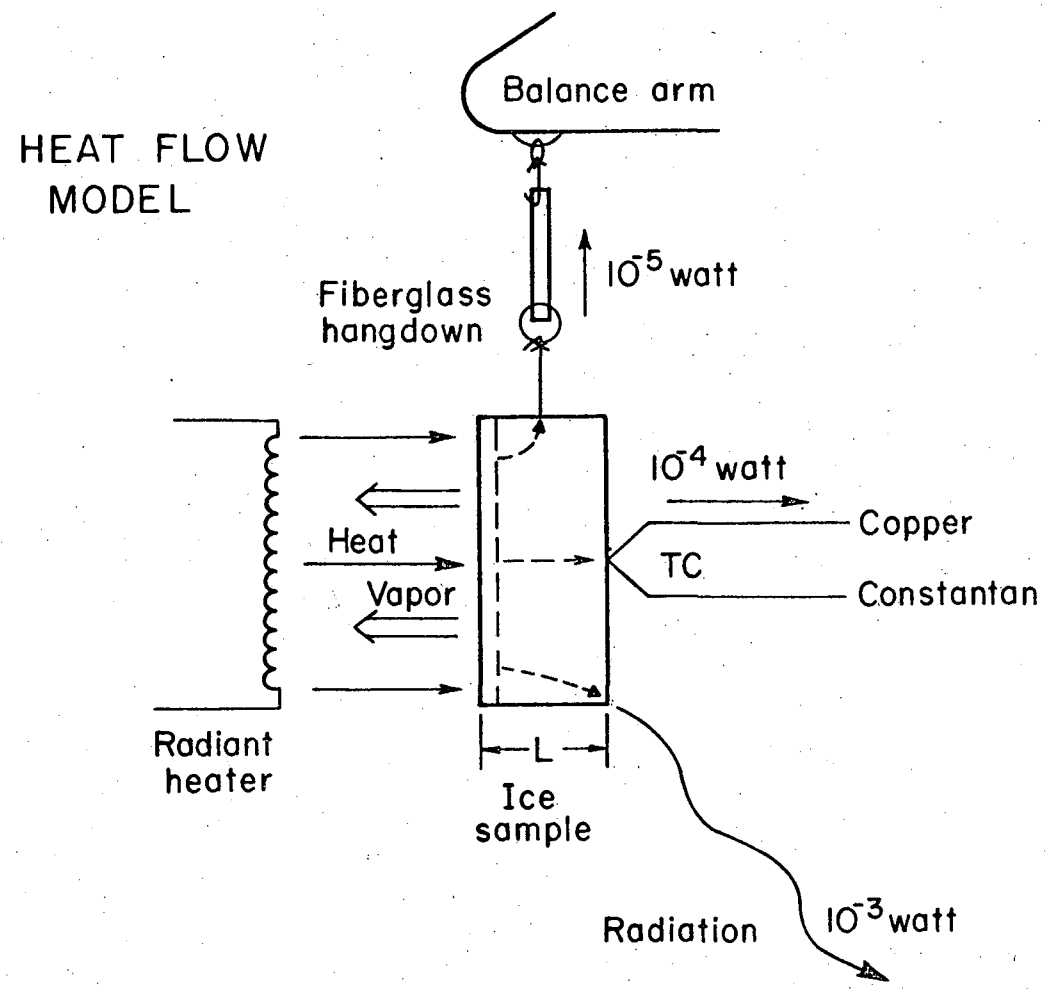

Steady-state solid-state thermal conduction

$$\frac{dT}{dx} = \frac{Q}{KA}; \Delta T = L\frac{dT}{dx} = 0.1\ °C$$

Sublimation power

t, °C	Q, mwatts
-70	43
-60	170
-50	660
-40	2000

XBL695 - 2773

Figure 4. Heat Flow Model

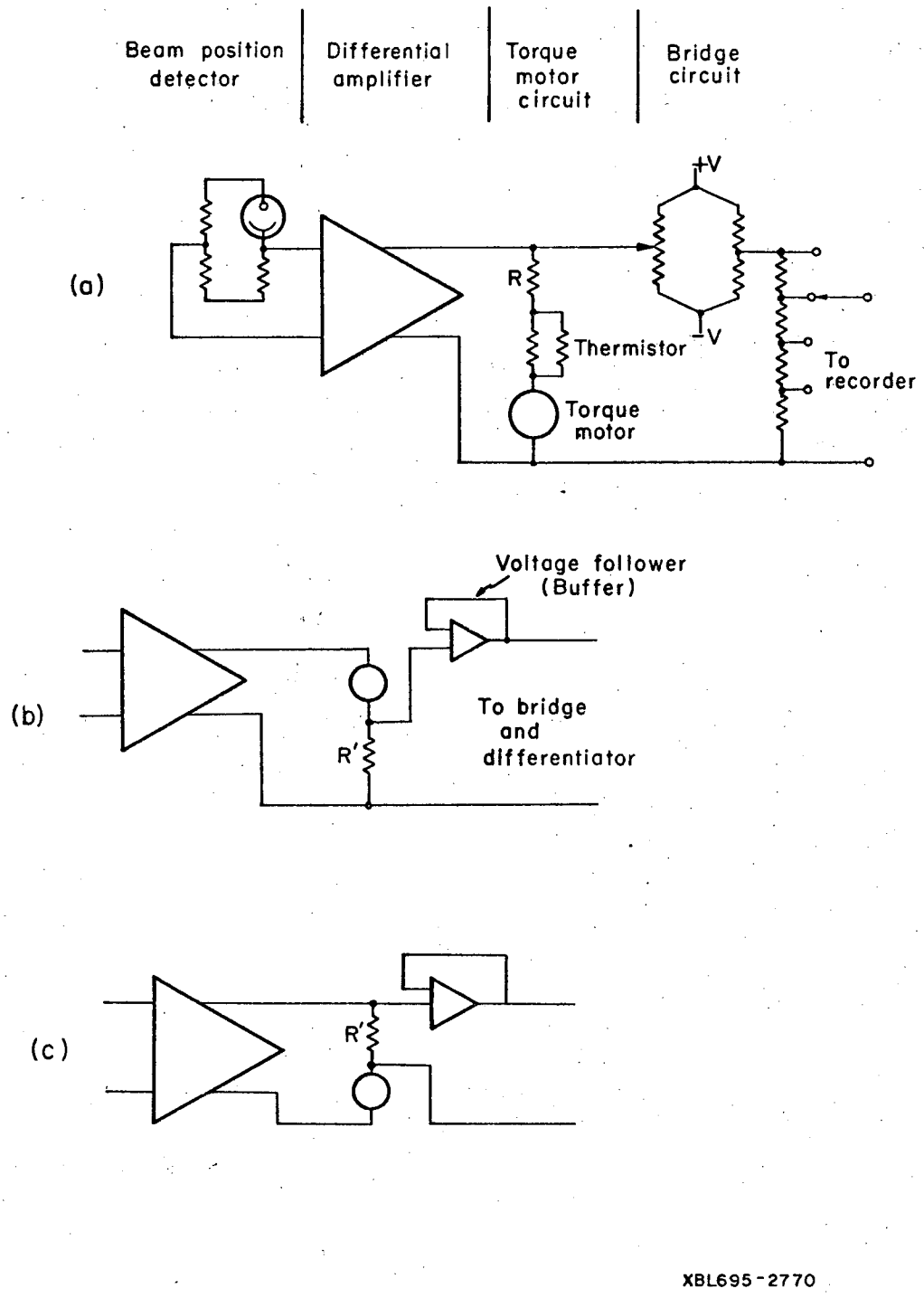

Figure 5. RG Electrobalance (R). Simplified Schematics

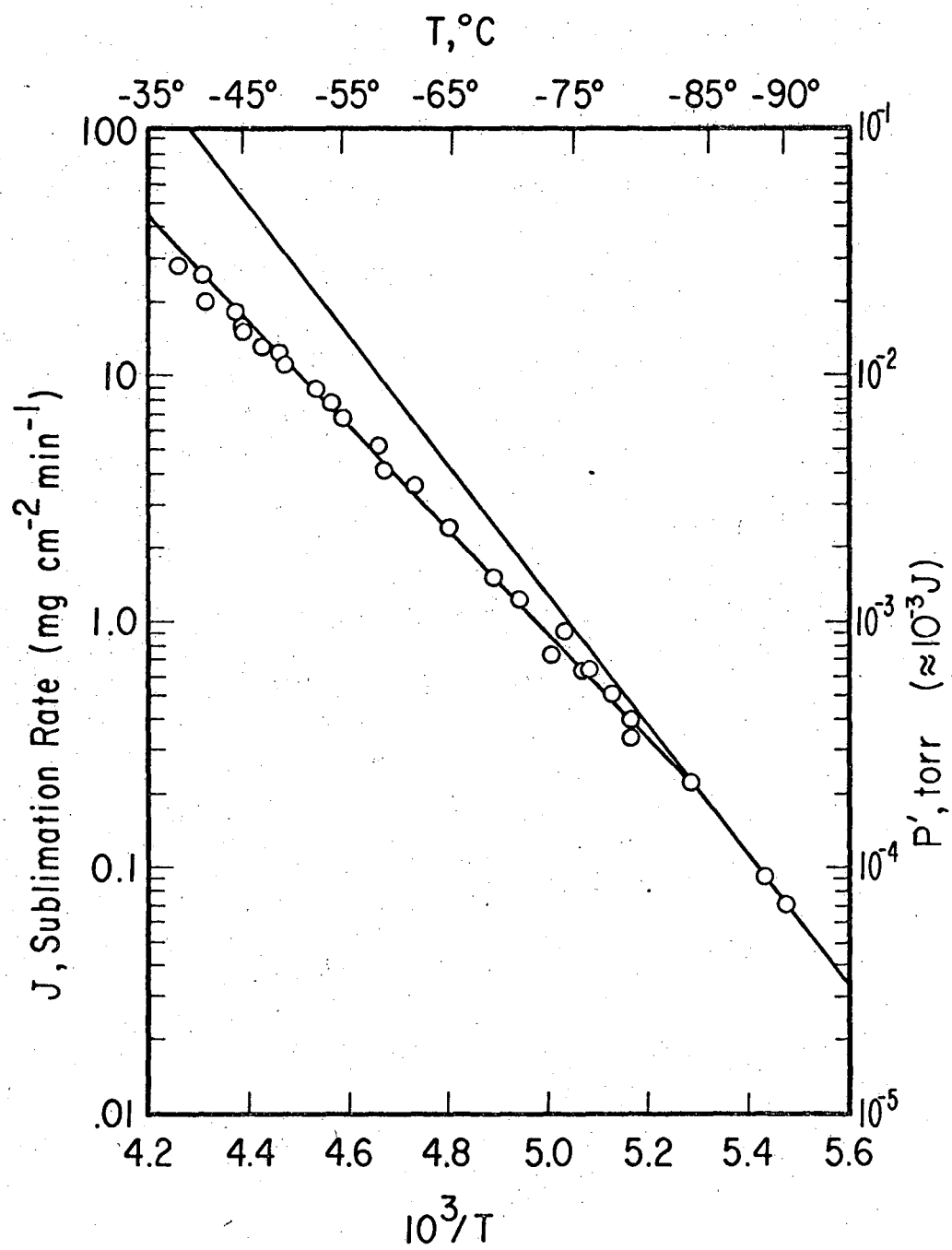

XBL695-2774

Figure 7. Single Crystal Ice Vaporization Rate, -90C to -40C.

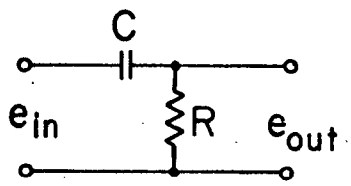

$$e_{out} = RC\frac{d}{dt}\, e_{in}$$

Figure 6. Simple passive differentiator (high-pass filter).

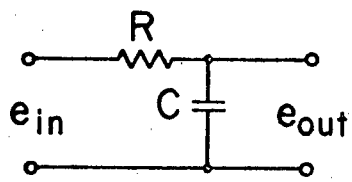

$$e_{out} = RC\int e_{in}\,dt$$

Figure A1. Simple passive filter (integrator).

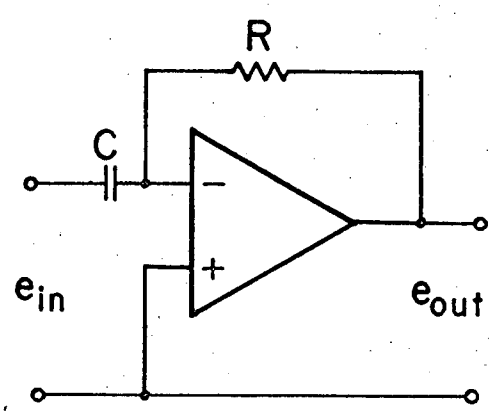

$$e_{out} = RC\frac{d}{dt}\, e_{in}$$

Figure A3. Simple active differentiator.

XBL695-2769

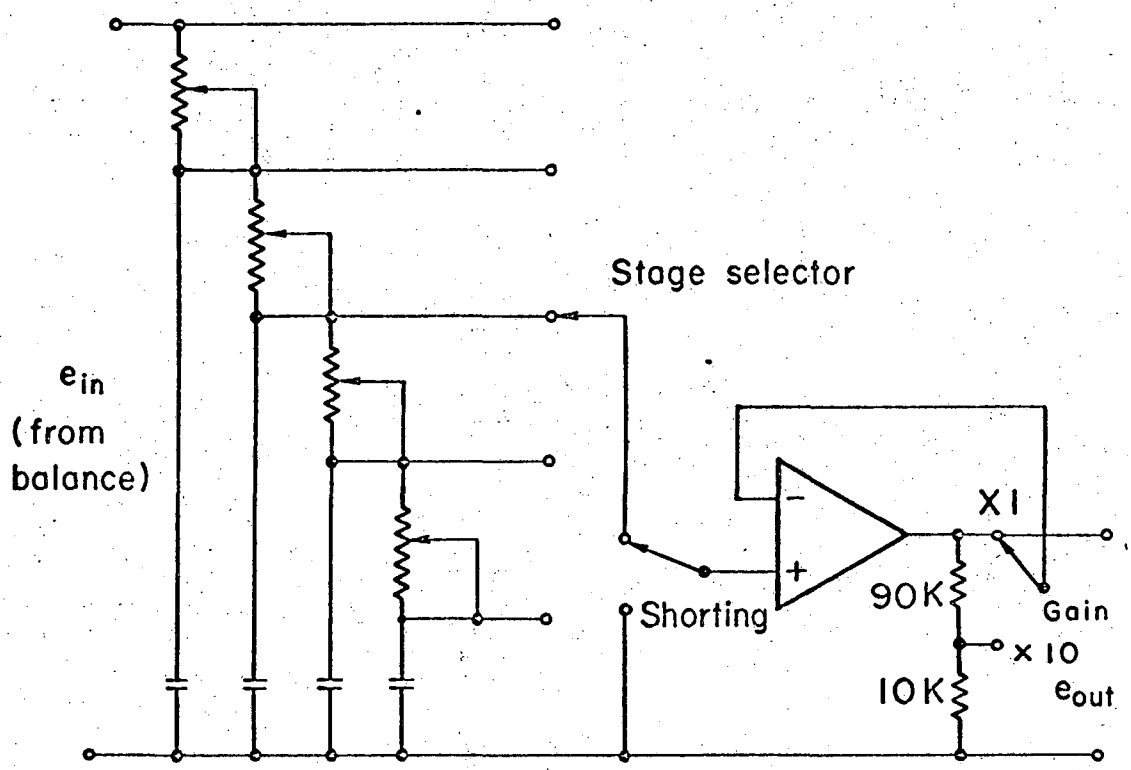

XBL695-2768

Figure A2. Continuously variable, multi-stage filter with optional follower.

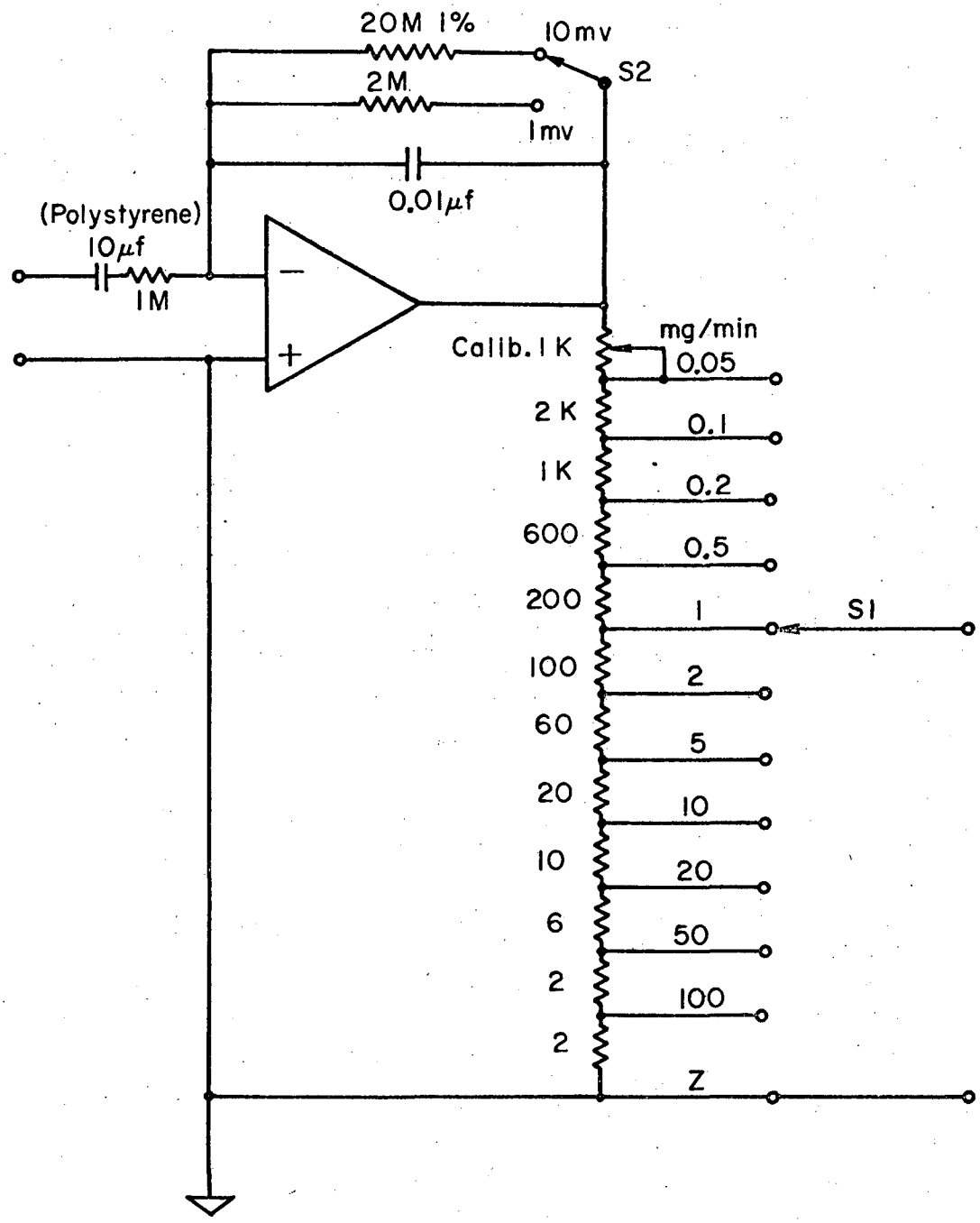

XBL695-2766

Figure A4. Complete active differentiator (1).

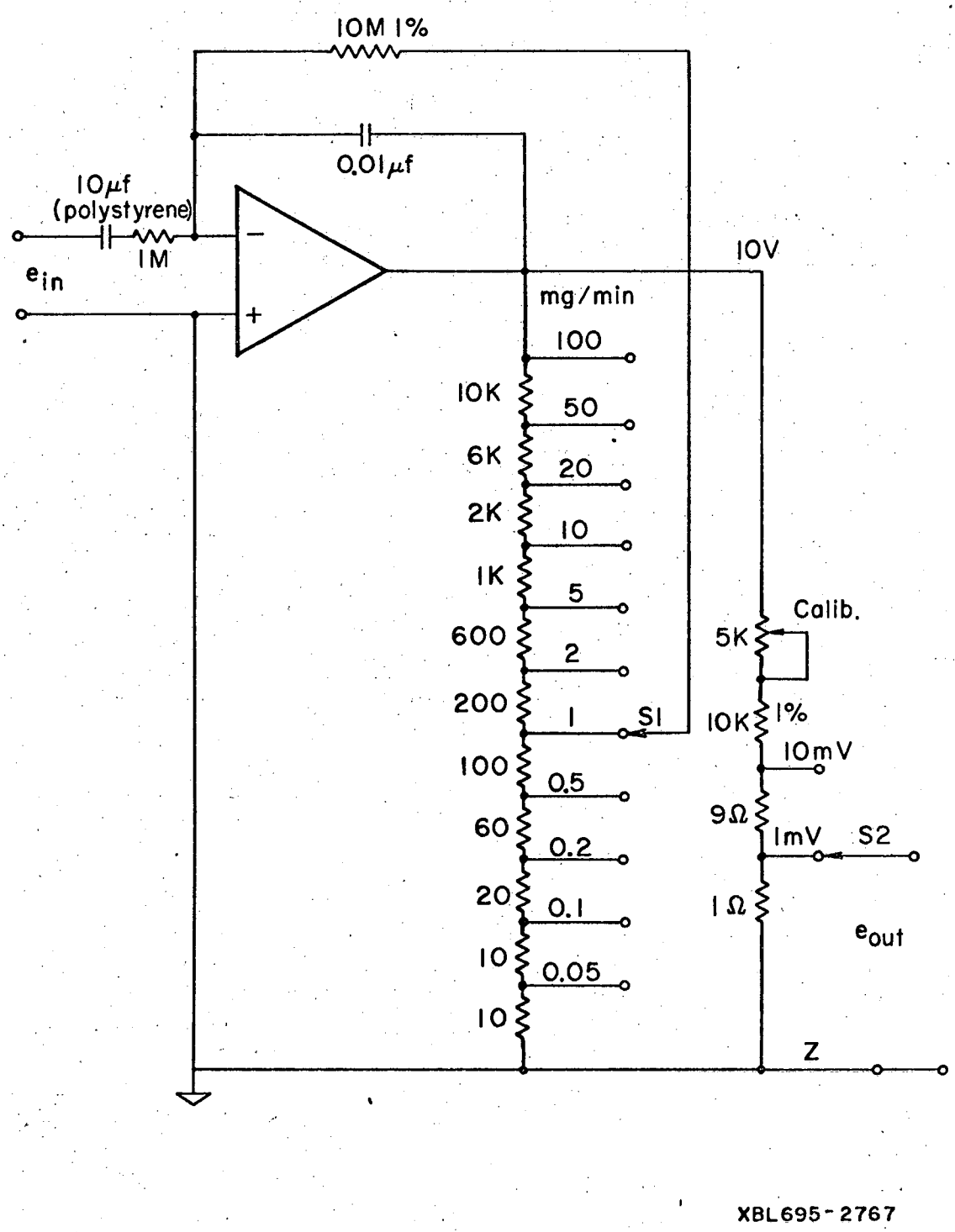

Figure A5. Complete active differentiator (2).

LEGAL NOTICE

This report was prepared as an account of Government sponsored work. Neither the United States, nor the Commission, nor any person acting on behalf of the Commission:

A. Makes any warranty or representation, expressed or implied, with respect to the accuracy, completeness, or usefulness of the information contained in this report, or that the use of any information, apparatus, method, or process disclosed in this report may not infringe privately owned rights; or

B. Assumes any liabilities with respect to the use of, or for damages resulting from the use of any information, apparatus, method, or process disclosed in this report.

As used in the above, "person acting on behalf of the Commission" includes any employee or contractor of the Commission, or employee of such contractor, to the extent that such employee or contractor of the Commission, or employee of such contractor prepares, disseminates, or provides access to, any information pursuant to his employment or contract with the Commission, or his employment with such contractor.

TECHNICAL INFORMATION DIVISION
LAWRENCE RADIATION LABORATORY
UNIVERSITY OF CALIFORNIA
BERKELEY, CALIFORNIA 94720