To be published as Chapter 13
of "Sulfur Chemistry, Inorganic
and Organic: An Integrated View"
A. Senning, Editor (M. Dekker, Inc.)

UCRL-19131
Preprint

c. 2

RECEIVED
LAWRENCE
RADIATION LABORATORY
APR 24 1970
LIBRARY AND
DOCUMENTS SECTION

# DIATOMIC SPECIES CONTAINING SULFUR

Beat Meyer, Dan D. Jensen, and Thottathil V. Oommen

November 1969

AEC Contract No. W-7405-eng-48

TWO-WEEK LOAN COPY

*This is a Library Circulating Copy which may be borrowed for two weeks. For a personal retention copy, call Tech. Info. Division, Ext. 5545*

UCRL-19131

LAWRENCE RADIATION LABORATORY
UNIVERSITY of CALIFORNIA BERKELEY

4

## DISCLAIMER

This document was prepared as an account of work sponsored by the United States Government. While this document is believed to contain correct information, neither the United States Government nor any agency thereof, nor the Regents of the University of California, nor any of their employees, makes any warranty, express or implied, or assumes any legal responsibility for the accuracy, completeness, or usefulness of any information, apparatus, product, or process disclosed, or represents that its use would not infringe privately owned rights. Reference herein to any specific commercial product, process, or service by its trade name, trademark, manufacturer, or otherwise, does not necessarily constitute or imply its endorsement, recommendation, or favoring by the United States Government or any agency thereof, or the Regents of the University of California. The views and opinions of authors expressed herein do not necessarily state or reflect those of the United States Government or any agency thereof or the Regents of the University of California.

UCRL-19131

# DIATOMIC SPECIES CONTAINING SULFUR

Chapter 13 for "Sulfur Chemistry,
Inorganic and Organic: An Integrated View",
A. Senning, editor, M. Dekker, Inc.

Beat Meyer

Inorganic Materials Research Division
Lawrence Radiation Laboratory
University of California
Berkeley, California 94720
and University of Washington
Seattle, Washington 98105

and

Dan D. Jensen and Thottathil V. Oommen

Chemistry Department
University of Washington
Seattle, Washington

## Table of Contents

13.1 Introduction

13.2 Preparation

13.3 Spectral Properties

13.4 Thermodynamic Data

13.5 Summary

## 13.1 Introduction

Diatomics are not normally stable at room temperature. The diatomic species exist only at high temperature and at low pressure, or in inert low temperature solution. Therefore, this chapter deals essentially with high temperature chemistry and cryochemistry.

Some fifty-four compounds, for example CaS, FeS, CoS, NiS, HgS, seem to contradict the above statement, because they are stable and can be described by diatomic formulas. Their properties are , however, not representative of their diatomic relatives; they are not molecular solids. They are merely binary compounds with a 1:1 molar ratio. This is evidenced by the fact that they have large lattice energies and high melting points and that their vapor consists of many different species.

A detailed review of the properties and preparation of gaseous diatomics would exceed the scope of this book. Therefore, this review is general in nature. The literature references do not aspire to be complete; no justice is given to priorities of work. We have omitted most references to work summarized in Gmelin (1) and Pascal (2). More details on individual species are available in referenced original work and review articles. Instead of presenting sequences of individual description, much of the data is summarized in tables and figures. In many of these compilations we include predicted properties of diatomics which have not yet been prepared or observed.

For discussion of preparation and properties, diatomics are grouped accoring to the position of the sulfur partner in the periodic chart. The first diatomic is HS. Since diatomic alkali sulfides do not exist, alkaline earth sulfides are next. Then come third to seventh row compounds, followed by those of row Ib and IIb. Transition metal sulfides are listed according to increasing atomic number. Lanthanide elements come next, and actinide sulfides are at the end. In tables of numerical data, the order is different; all diatomics are listed in alphabetical order of chemical symbol.

**TABLE 1: Organization of sulfides**

| | | | |
|---|---|---|---|
| A) | HS | G) | VII |
| B) | II | H) | Ib |
| C) | III | I) | IIb |
| D) | IV | J) | Transition Metals |
| E) | V | K) | Lanthanides |
| F) | VI | L) | Actinides |

## 13.2 Preparation

### General

As mentioned, diatomic sulfides are only stable at elevated temperature. At room temperature, diatomic sulfides react, or they form ionic or metallic and sometimes semiconductor solids. In these the sulfur often

dimerizes under formation of $S_2^{-2}$. A typical example is provided by FeS, in which the sulfur occurs as $S_2^{-2}$ ion and as $S^{-2}$ which is bound to the iron. The sulfur-iron "bond" is so delocalized, that the ratio of iron to sulfur is not fixed; iron sulfides are non-stochiometric and form stable solids of the composition $FeS_x$, where $0.81<x<1.00$. Vaporization of such solids does not yield pure diatomic sulfide, but the vapor can be adequately described in terms of elemental species, $S_2$, and other sulfur molecules, and the metal sulfides MS and $MS_2$. The relative yield of diatomic sulfide depends on the sulfur partner, but it can be influenced by the composition of the solid. The presence of elemental silicon, for example, will enhance the diatomic vapor pressure if $SiS_2$ is sublimed.

Vapors of stable sulfides can be made in quartz furnaces, Figure 1a. Above 1200°C, a King furnace is used, Figure 1b. This type of furnace consists of a graphite tube in which the parent compound is placed. The tube serves as an electrical resistor which is heated by the flow of 200-600 A at 6 volts. Properties of the vapor can be observed through the end of the tubes. The entire tube is inside a vacuum system, and filled with argon at a pressure of about ten torr to delay diffusion from the hot tube to the cold observation window. If sulfides are to be condensed or studied in a molecular beam, the vapor is produced by effusion from crucibles or Knudsen cells. SnS, for example, can be vaporized in, or from, a quartz double furnace, Figure 1c. BeS is vaporized from a carbon cell, Figure 1d. At higher temperature molybdenum or silicon carbide cells, heated by induction or electron bombardment, can be used.

Many sulfides cannot be made under equilibrium conditions. CS, for example, is under no condition the prevalent vapor species. In such cases, molecules must be made as transient species in low pressure vapor, by flash photolysis, Figure 1e, or discharge techniques. In the flash photolysis experiment, the tube must be refilled with new reactant after each flash. In contrast, a discharge tube can be continuously operated. The lifetime of a discharge tube, as shown in Figure 1f, can be several hours. It contains the parent compounds and about 1 torr of argon as a starter gas. For NS, a flow system is a convenient source. Other molecules can best be made in solid low temperature solution by in situ synthesis, Figure 1g, as discussed for the case of $S_2$. The same apparatus can be combined with a furnace or flash source to trap metastable diatomic sulfides. References to all these techniques can be found in reference 3. Figure 2 shows all observed solid and gaseous sulfides.

A) HS

HS has been observed in radiofrequency (rf) discharges of $H_2S$ at low pressure (4), in microwave discharges and through photolysis. It can also be made by reaction of $CHCl_3$ + $SOCl_2$ + K at 485°C at 10 torr (5). HS is, normally,unstable in the gas phase. Metastable HS has been prepared by photolysis of $H_2S$ in rare gas matrices at 15°K (6). In such matrices radicals can be stored indefinitely (3,7).

B) Second row sulfides

BeS has been prepared by the reaction of Be with sulfur vapor and hydrogen at 1150°C (8), by the reduction of $BeSO_4$ with dry CO, $CaC_2$ or

sulfur (9), or by the reaction of vapors of $BeCl_2$ and $H_2S$ (10). The vaporization of BeS is not a convenient preparation method, because solid alkaline earth sulfides are ionic. Solid BeS melts at 2275°K. The vapor contains Be, $S_2$, S, as well as BeS. MgS can be prepared by the reduction of $MgSO_4$ with $CS_2$ at 750°C (11), and the reaction of Mg with $H_2S$ (12). CaS can be prepared by the reaction of $CaCO_3$ with $H_2S$ at 1000°C (13). SrS and BaS are prepared in the same way. The reduction is accelerated by the presence of hydrogen.

C) Third row sulfides

BS is formed in a discharge of $B_2S_3$ in helium or argon (14). AlS could probably be formed in analogous discharges and by reaction of $AlCl_3$ and $H_2S$ vapors. GaS is the stable vapor of solid GaS which can be made by direct reaction of the elements at 900°C (15-17). It sublimes at 950°C. InS and TlS are obtained in the same way (18). In all three cases, other sulfides are also stable. Solid sulfides have the composition $(GaS)_4$; InS, $In_2S$, and TlS, $Tl_2S$ and $Tl_2S_3$.

D) Fourth row sulfides

CS is formed in discharges through $CS_2$, but $S_2$ is also formed (19, 20). CS also occurs in carbon arcs through sulfur vapor, and, at room temperature, in low pressure reactions of $CS_2$ with excited atoms and molecules (21). SiS is formed by heating $SiS_2$ and Si, Si and sulfur vapor, or a misture of $Sl_2S_3$, $SiO_2$ and Si (22, 23). At low temperature SiS dispro-

portionates into $SiS_2$ and Si (24). GeS is a stable vapor above solid GeS. It can be made by reacting $GeO_2$ with $H_2S$ and hydrogen at 500°C, or from $GeCl_2$ and $H_2S$ (25). GeS sublimes at 430°C; it melts at about 530°C. Diatomic GeS can be trapped in rare gas matrices. SnS is the vapor above SnS which is formed by heating the elements (18) or a mixture of $SnO_2$ and KNCS. It also forms from aqueous $Sn^{+2}$ solutions with $H_2S$. SnS can be trapped in solid rare gases. PbS is formed in the same way.

E) Fifth row sulfides

NS is formed by reaction of active nitrogen on $SCl_2$ (26), sulfur vapor mixed with $SF_6$ and $S_2Cl_2$ (27), and a discharge through nitrogen and sulfur vapor (26). PS is observed in discharges containing phosphorous and sulfur (27, 28). SbS and BiS have been observed in vapor phase by the decomposition of the stable sulfides (29).

F) Sixth row sulfides

SO results by reaction of COS and oxygen atoms (30), a discharge through $SO_2$ (31, 32) and photolysis of $S_2O$ (33). It is observed in sulfur containing flames, beside $SO_2$. $S_2$ occurs in almost all sulfur-rich flames, discharges through $CS_2$, $S_2Cl_2$, and sulfur (34). It is a stable component of sulfur vapor, in equilibrium with other sulfur species of the composition $S_x$, where $1<x<12$ (35). $S_2$ has been trapped in inert matrices at 20°K (36, 37). It can be synthesized in inert low temperature solution through photolysis of $H_2S$, $S_2Br_2$, $S_2Cl_2$ and COS (38). SeS has been

observed with a masspectrometer in the vapor phase (39). TeS has been observed spectroscopically (40). PoS is radioactive. It can be prepared by treating aequeous $PoCl_2$ with $H_2S$. Above 275°C it decomposes into the elements (41).

G) Seventh row sulfides

SF has been observed in a microwave discharge by the reaction of F atoms, made from $CF_4$, with COS (42). Other diatomic sulfur halides have not yet been synthesized, but their properties can be predicted by analogy with the oxygen halides. Since the Cl-S and Br-S bonds are weaker than S-S, photolysis of $S_2Cl_2$ and $SCl_2$ in the gas phase or in matrices does not yield SCl, but $S_2$ and Cl atoms, which, on recombination, form larger molecules (43).

H) Row Ib sulfides

CuS forms a stable solid. It is formed by reaction of $Cu^{+2}$ and $H_2S$, or reaction of Cu and $CS_2$ (44). The solid contains $S_2^{-2}$ and $S^{-2}$ ions. Gaseous CuS has not yet been reported. AgS has not yet been made. Although gold is the only element which does not react directly with sulfur, solid AuS can be made by the reaction of $AuCl_3$ and $H_2S$ below 40°C, or $AuCl_3$ with $Na_3Au(S_2O_3)_2$. (45). AuS decomposes above 140°C.

I) Row IIb sulfides

ZnS, made by reaction of $Zn^{+2}$ with $H_2S$, melts at 1650°C and can be vacuum distilled. It is a colorless semiconductor. At room temperature, it occurs in two different crystal forms (Zinkblende and Sphalerite. Above

1000°C it transforms into Wurtzite. CdS also forms two solid stable allotropes. Above 20 kbars ZnS and CdS transform into a rock-salt type form (46). CdS sublimes at 980°C and melts at about 1750°C. β-HgS is black; on standing or heating it converts into red trigonal α-HgS. α-HgS contains helical $-S-Hg-S-H_S-$ chains (47). It sublimes at 580°C in diatomic form.

J) Transition metal sulfides

Solid ScS is prepared by heating stoichiometric quantities of the elements to 1150°C (48). TiS is reddish and has metallic properties. The structure is Ni-As type (49). VS is prepared by heating $V_2S_3$ to 1000°C, or by reducting $V_2O_5$ with $H_2S$. It melts at about 1900°C (50). CrS is obtained by heating stoichiometric quantities of the element to 1000°C (18). Above 600°C it disproportionates into metal and higher sulfides. MnS exists in three modifications. α-MnS is formed by $MnCl_2$ and $H_2S$ under a nitrogen atmosphere in the presence of $NH_4Cl$. FeS can be made directly by heating the elements. As other transition metals, FeS occurs in many non-stoichiometric forms with compositions of $F_{0.85}S$ to $FeS_2$. CoS has two forms. Other cobalt sulfides with $Co_{1-x}S_x$ up to $Co_9S_8$ (β-CoS) are formed. The sulfide is formed at 650°C from the elements. α-CoS melts at 1100°C (24). NiS can be made from the elements, or by precipitation of $Ni^{+2}$ with $H_2S$. In aequeous solution $Fe^{+2}$, $Co^{+2}$ and $Ni^{+2}$ form mixed sulfides-hydroxides with compositions depending on the pH.

YS exists in stoichiometric and non-stoichiometric compositions. It can be made from elements. ZrS is made in the same way, and also has many different compositions. NbS in two forms is obtained from the elements at 850°C. PdS is formed by the elements at 500°C. HfS is made in the same way, with subsequent annealing at 1450°C. Pt and sulfur react under formation of PtS. The sulfide is also formed from $PtCl_2 + H_2S$; PtS is tetragonal and a semiconductor (51).

K) Lanthanium sulfides

All lanthanide elements, except Pm, form binary sulfides with the composition 1:1 (24, 52). La, Pr and Nd react with elemental sulfur at 1000°C. CeS is formed when $Ce_2S_3$ is heated to 2200°C in the presence of $CaH_3$ in molybdenum container.

L) Actinide sulfides

ThS, US, PuS and NpS are made by reaction of the metals with $H_2S$ at 500°C (53). PuS can be made by reduction of $PuF_3$ with Ba metal in a BaS crucible.

Summary

Twenty-seven elements form stable diatomic sulfides at high temperature; seventeen sulfides can be formed by vaporization of the solid sulfide. However, the diatomic species exist only in a narrow pressure and temperature range, and even then the vapor is normally not pure, but contains measurable, if not appreciable, quantities of atoms, $S_2$ and polyatomic

sulfides. Another thirty-nine sulfides form binary solids with a 1:1 composition, but decompose upon heating. The vapor composition over hot sulfides has been extensively studied by Goldfinger and Drowart (83, 84, 86). For the preparation of other diatomics, gas phase non-equilibrium synthesis or matrix isolation methods must be used. Gas phase non-equilibrium synthesis has been used for the preparation of NS, HS and CS. NS can be prepared in a flow system by the reaction of active nitrogen with sulfur vapor. It obtains mainly in the excited B $^2\Pi$ state, which relaxes to the ground state under emission of blue light. NS can also be obtained by other techniques, for example in a microwave discharge through a nitrogen and $S_2Cl_2$ mixture. HS and CS are best obtained by flash photolysis of the stable parent molecules. In all of the above cases, the diatomic sulfides are only short lived and recombine with other vapor components within milliseconds, or a short fraction of a second.

Unstable molecules can be stored and preserved if they are trapped in matrices. Matrices are formed by condensing a mixture of the sulfide and a rare gas at 4° and 20°K (Figure 1g). If enough inert gas is present, diatomic species will be surrounded by weakly interacting rare gas atoms and will not chemically react with other sulfide molecules. Thus, solids are formed, in which the sulfide is metastable. Another advantage of rare gas matrices is that molecules can be synthesized in situ. $S_2$, for example, can be formed by photolysis of $S_2Cl_2$ or $S_2Br_2$. CS can be made by photolysis of $CS_2$, and BeS and BaS could be made by the reaction of

the alkaline earth atom with sulfur atoms prepared by in situ photolysis of CO. For this purpose a molecular beam of Ba and argon, in a molar ratio of 1:500 is condensed on a window at 20°K, simultaneously with a beam of COS in argon (in the ratio 1:100). COS is photolyzed with 253.65 nm mercury light, yielding S atoms and inert CO. S and Ba atoms are brought to reaction by a temperature increase to 33°K, where diffusion sets in (3). Similar synthetic reactions could be used to make other sulfides. Such matrix synthesis are not far fetched projects for the future. Similar, and much more complicated reactions have already been employed for many years to prepare other new free radicals (5).

## 13.3 Spectral Properties

Spectral properties of 16 diatomic sulfides are summarized in Table 2 in alphabetical order of the chemical symbol of the sulfur partner. Much of the data on sulfides results from the work of Barrow and his students. Table 2 lists only references to the latest available publication on each species. Detailed discussions of the spectra exceeds the scope of this chapter. Earlier literature is summarized in books by Rosen(55), Herzberg (54) and Gaydon (34), in an article by Barrow (63), in a newsletter (76), and in a summary by Mulliken (77).

The purpose of Figure 3 is to give a comparison of the presently known states. The figure does not list the character of states and transitions, because this can be obtained from Table 2. Table 2 is probably

not complete because spectra of new molecules and new data for presently known molecules are continuously reported. So far, only visible spectra of sulfides are known and most correspond to allowed transitions between lower lying states. If only emission is known, it can be assumed that the molecule is not stable enough for absorption studies. In the future, matrix work surely will yield more absorption data on new, unstable molecules, and emission from the lowest excited state which is normally spin forbidden (56). The knowledge of lower lying states is important for computing thermodynamic data, and for understanding the reaction of excited molecules. Data for the electronic transitions of group II, III, IV, V and VI sulfides are represented in Figure 3. The figures also show the data for the corresponding oxides. The abscissa lists molecules in order of increasing atomic weight. It is generally established that for a given electron configuration with increasing atomic weight, the electronic energy levels move towards lower values; as a result, the absorption edge moves toward the red. In Figure 3-c for CO, for example, the first allowed transition is in the vacuum uv. The molecule is colorless. In CS, the transition lies in the far uv. SnS vapor is blue and PbS, with an allowed transition in the visible, is brown. A similar trend is observed for all states of these molecules, for example the lowest excited state, $\tilde{a}\ ^3\Pi$. Emission of $^3\Pi \rightarrow {}^1\Sigma$ in CS is predicted to be light blue, SiS dark blue, and GeS is observed to be yellow, SnS green and PbS is red. This trend holds only qualitatively, and it is invalid for Rydberg states. However, if for a

given molecule the assignment of an observed state or the basis of the spectral analysis is doubtful, it is well worth comparing states of similar molecules. This procedure was used to predict the location of the $\tilde{a}\ ^3\Pi$ states in GeS and SnS, which were all previously unknown, but have now been observed in matrices (62, 72).

Group II sulfides have a ground state $^1\Sigma^+$, but they also have a low lying $^3\Pi$state. Since $^3\Pi$-$^1\Sigma$ transitions are forbidden and therefore weak, the relative position of the two states is not directly observed. The spectra consist, therefore, of two disconnected systems, one involving singlet states, and the other involving triplet states. Although the corresponding oxides are extensively studied (74), the order of excited states is not yet conclusively established. This is complicated by the occurrance of hydroxide impurities, which further complicate analysis.

Group III sulfides are not well known, because the molecules are not stable. Most data comes from emission studies, where small amounts of the desired molecule emit in the presence of large impurity concentrations. Under such conditions, the identity of the emitter must be established by thorough rotational analysis, and by analysis of isotope shifts. The recent availability of pure $^{34}S$ should simplify identification and knowledge of unstable molecules of this group.

Group IV sulfides are relatively well known. In Figure 3c, all molecules have ten valence electrons, like $N_2$ or CO. The ground state is

$^1\Sigma$; the first excited orbital is $\sigma^2\pi^3\pi$ which yields one state each with $^3\Pi$, $^3\Sigma$, $^1\Pi$ and $^1\Sigma$. The lowest lying fully allowed transition is B $^1\Pi \leftrightarrow$ X $^1\Sigma^+$ in $N_2$, and $^1\Pi \leftrightarrow$ X $^1\Sigma^+$ in CO. The lowest excited state of ten electron molecules is $^3\Pi$, which is close in energy to $^3\Sigma$ of the same electron configuration. The transition a $^3\Pi \rightarrow$ X $^1\Sigma$ is spin forbidden, but appears in matrices as strong phosphorescence because of matrix induced intersystem crossing from the first excited singlet state $^1\Sigma \rightsquigarrow {}^3\Pi$ (56).

Group V sulfides are isoelectronic with NO. The ground state is $^2\Pi$, the lowest excited state $^4\Pi$. Only allowed transitions of NS and PS are known. Detailed rotational analysis and sulfur isotopes have been used for identifying the states of NS.

Group-VI sulfides are isoelectronic with $O_2$, and have a ground state $^3\Sigma^-$. The lowest lying allowed transition corresponds to the Schumann-Runge bands, which are responsible for the atmospheric absorption of ultraviolet light by $O_2$. In the last five years, several transitions involving singlet states have been observed and analyzed. However, so far, the singlet and triplet states have not been conclusively correlated. For $S_2$, knowledge about eighteen states is now available. Due to the work of Barrow and his coworkers (67, 68), data is so thoroughly established and carefully collected that $S_2$ is probably the best known diatomic molecule.

## 13.4 Thermodynamic Data

### A. Dissociation Energies

Table 3 gives the dissociation energies for some diatomic sulfides. The data is subject to some uncertainty, because of conflicting values in the literature. A detailed analysis of the data exceeds the scope of this chapter. Sulfides, in general, have lower dissociation energies than oxides, but, fortunately, the pattern for oxides and sulfides are strikingly similar. This is shown in Figure 4 for group II and IV elements. The oxides are much better known and are reviewed in a very recent, excellent article (74).

If we compare the dissociation energies as a function of the valence electrons, a trend analogous to that for homonuclear diatomics is obtained (79). Bond energies increase with the number of electrons in bonding orbitals minus the number of electrons in the anti-bonding orbitals. The high stability of CS and other group IV sulfides is thus understood through comparison with $N_2$.

Comparison with oxides explains why many diatomic sulfides are not observed. The alkali metal and halogen oxides, for example, have very low bond energies. Thus, the sulfides are too unstable to exist, except for SF for which only little is known (42). The most stable of the not yet observed diatomic alkali sulfides should be LiS. The dissociation energy of LiS should be about 60 kcal/mole, which is the value of NaO.

B. Heats of Formation

The data in Table 4 indicates that diatomic sulfides exist only at high temperatures. Transition element sulfides decompose on heating and cannot be made from solid sulfides. Except for SnS and GeS, diatomic sulfides cannot be prepared in pure form under equilibrium conditions.

The solid sulfides are formed spontaneously from the elements, but preliminary heating is required to overcome the activation energy barrier. The general pattern of sulfide formation reflects the change in the electronegative character of the elements. Lattice forces also play a significant role. The heats of formation of solids decrease across the transition series, and rise in the group B metals. If the heats of formation from metal atoms rather than from the solid elements are compared, one obtains a pattern almost similar to the metal binding energies, Figure 5. This sequence contains curiously high values for TiS and VS. This may be due to back II-bonding from the S anion into the empty d-orbitals of Ti and V cations. The diatomic sulfides of the first transitional series should be more stable than those of the second and third series, for which a higher oxidation state is preferred, although the heats of formation decrease generally in the order of oxides < sulfides < selenides < tellurides. There is a steadily increasing preference for the more polarizable sulfur, through the transition series, in the order:

Mn(II) > Fe(II) > Co(II) > Ni(II) > Cu(II) > Zn(II).

On reaching the B subgroup this preference decreases again.

## 13.5 Summary

Only twenty seven sulfide species are truly diatomic. They are all gaseous and exist under equilibrium conditions only at high temperature and at low pressure; even then, the diatomic species is usually not pure, but contaminated with atoms and $S_2$. Accoring to this behavior, the bond energies of sulfides are low. Their bond strength is always lower, but analogous to that of the corresponding oxides. The electronic states and properties show the same analogy. The stability of the yet unknown diatomic sulfides is so low that they are not expected to occur as predominant vapor species above their elemental solids and compounds. However, low temperature matrix synthesis is a promising tool for the study of new species, such as SCl, SBr and SI, and for the study of reactions and spectra of all diatomic sulfides.

References:

1. "Gmelin's Handbuch der Anorganische Chemie", Verlag Chemie, Weinheim, 1934 to present.

2. P. Pascal, "Nouveau Traite de Chimie Minerale", Masson & Co., Paris, 1960.

3. B. Meyer, "Low Temperature Spectroscopy; Optical Properties of Molecules in Matrices, Mixed Crystals and Glasses", American Elsevier, N.Y., 1970.

4. D. A. Ramsay, J. Chem. Phys. 20, 1920 (1952).

5. C. M. Pathak and H. B. Palmer, J. Mol Spectry 32, 162 (1969).

6. D. E. Milligan, National Bureau of Standards, Washington, D.C., personal communication, 1966.

7. D. E. Milligan and M. E. Jacox, in"Physical Chemistry an Advanced Treatise", H. Eyring, Ed. (Academic Press, N.Y., Vol. IV, 1969).

8. H. Von Wartenberg, Z. Anorg. Allg. Chem. 252, 136 (1943).

9. P. Silber, Ann. Chim. (12) 7, 182 (1952).

10. E. Tiede and F. Goldschmidt, Ber. Dtsch. Chem. Ges. 62, 758 (1929).

11. E. Tiede and F. Richter, Ber. dtsch. Chem. Ges. 55, 69 (1922).

12. K. Nielsen, Ann. Chim. (12) 2, 354 (1947).

13. H. Von Wartenberg, Z. Anorg. Allg. Chem. 252, 136 (1943).

14. P. B. Zeeman, Canad. J. Physics 29, 336 (1951).

15. W. Klemm and H. V. von Vogel, Z. Anorg. Allg. Chem. 219, 45 (1934).

16. H. Hahn and G. Frank, Z. Anorg. Allg. Chem. 278, 340 (1955).

17. H. Spandau and F. Klanberg, Z. Anorg. Allg. Chem. 295, 300 (1958).

18. G. Brauer, "Handbook of Preparative Inorganic Chemistry", Academic Press, N.Y., 1965.

19. A. Lagergvist, H. Westerlund, C. V. Wright and R. F. Barrow, Ark. Fys. 14, 387 (1958).

20. R. F. Barrow, R. N. Dixon, A. Lagergvist and C. V. Wright, Ark. Fys. 18, 543 (1960).

21. B. Meyer, unpublished data.

22. W. C. Schumb and W. J. Bernard, J. Am. Chem. Soc. 77, 904 (1955).

23. G. Brauer, "Handbook of Preparative Inorganic Chemistry", Academic Press, N. Y., 1965.

24. F. Jellinek, Chapter on sulfides in "Inorganic Sulfur Chemistry", G. Nickless, ed. (Elsevier, N. Y., 1968).

25. G. Brauer, "Handbook of Preparative Inorganic Chemistry", Academic Press, N. Y., 1965, Vol. I.

26. J. J. Smith and B. Meyer, J. Mol. Spectry. 14, 160 (1964).

27. K. Dressler and E. Miescher, Proc. Phys. Soc., A68, 542 (1955).

28. K. Dressler, Helv. Phys. Acta 28, 563 (1955).

29. G. G. Gospodinov, et al., Vestn. Mosk. Univ., Ser.II 22(2), 54 (1967).

30. T. R. Rolfes, R. R. Reeves and P. Harteck, J. Phys. Chem. 69, 849 (1965).

31. A. Carrington, D. H. Levy, T. A. Miller, Proc. Roy. Soc. 298, 340 (1967).

32. R. G. W. Norrish and G. A. Oldershaw, Proc. Phys. Soc. (London) 249A, 498 (1958).

33. B. Meyer, unpublished data.

34. A. G. Gaydon, "The Identification of Molecular Spectra, John Wiley & Sons, N. Y., 1963.

35. J. Berkowitz, in "Elemental Sulfur", B.Meyer, ed., Interscience, N.Y., 1965.

36. B. Meyer, J. Chem. Phys. 37, 1577(1962).

37. L. Brewer, G. D. Brabson and B. Meyer, J. Chem. Phys. 42, 1385 (1965).

38. A. Morelle, Ph.D. Thesis, University of Washington, 1970.

39. J. Dowart and P. Goldfinger, Quart. Rev. 20 (4), 545 (1966).

40. H. Mohan and K. Magundar, Proc. Phys. Soc. 77, 147 (1961).

41. K. W. Bognall and D. S. Robertson, J. Chem. Soc. 1957, 1044 (1957).

42. A. Carrington, Proc. Roy. Soc. 302A, 291 (1967).

43. B. Meyer and J. J. Smith, UCRL Report 18060 (1968).

44. K. Fischbeck and O. Dorner, Z. Anorg. Allg. Chem. 182, 228 (1928).

45. U. Antony and A. Lucchesi, Gazz. Ital. 19, 552 (1889).

46. P. L. Smith and J. E. Martin, Physics Letters 19, 541 (1965).

47. K. L. Auririllius, Acta. Chem. Scand. 4, 1413 (1950).

48. J. P. Dismakes, et. al., Inorg. Chem. 3, 1220 (1964).

49. Y. Jeannin, Ann. Chim. 7, 57 (1962).
Y. Jeannin, Compt. Rend. Acad. Sci. 256, 3111 (1963).

50. S. L. Holt, R. J. Bouchard and A. Wold, J. Phys. Chem. Solids 27, 755 (1966).

51. F. Hulliger, J. Phys. Chem. Solids 26, 639 (1965).

52. J. Flahaut and P. Laruelbe, "Progress in the Science and Technology of the Rare Earths", L. Eyring, ed., (Pergamon Press, N.Y., 1968), Vol. 3, pg. 149.

53. G. T. Seaborg and J. J. Katz, "The Actinide Elements", McGraw Hill, 1954.

54. G. Herzberg, "Spectra of Diatomic Molecules", Van Nostrand, Princeton, N. J., 1960.

55. B. Rosen, "Donnees Spectroscopiques Concernant les Molecules Diatomiques", Hermann and Co., Paris, 1951

56. B. Meyer, Science, in press.

57. C. N. McKinney and K. K. Innes, J. Mol. Spectry. 3, 235 (1959).

58. R. F. Barrow, W. J. M. Gissane and G. V. M. Rose, Proc. Phys. Soc. 84, 1035 (1964).

59. W. J. M. Gissane and R. F. Barrow, Proc. Phys. Soc. 82, 1065 (1963).

60. R. F. Barrow, Proc. Phys. Soc. 90A, 555 (1967).

61. G. Drummond and R. F. Barrow, Proc. Phys. Soc. 65A, 277 (1952).

62. B. Meyer and Y. Jones, unpublished.

63. R.F. Barrow and A.J. Merer, Ann. Rep. Chem. Soc. (London) 59, 99 (1962)

64. M. D. Abadie and R. Herman, Compt. Rend. 257, 2820 (1963).

65. E. E. Vago and R. F. Barrow, Proc. Phys. Soc. 59, 449 (1947).

66. G. Lakshminarayana and N. A. Narasimham, Curr. Sci. 36, 533 (1967).

67. R. F. Barrow and R. P. DuParc, J. Phys. (Proc. Phys. Soc., London), At. Mol. Phys. 1, 283 (1968).

68. R. F. Barrow, P. P. DuParc and J. M. Ricks, J. Phys. (Proc. Phys. Soc., London) At. Mol. Phys. 2, 413 (1969).

69. J. M. Ricks and R. F. Barrow, J. Phys. (Proc. Phys. Soc., London), At. Mol. Phys. 2, 906 (1969).

70. G. Nilheden, Ark. Fys. 10, 19 (1956).

71. S. J. Q. Robinson and R. F. Barrow, Proc. Phys. Soc. 67A, 95 (1954).

72. B. Meyer and J. J. Smith, J. Mol. Spectry 27, 304 (1968).

73. B. Meyer, J. J. Smith and K. Spitzer, unpublished.

74 L. Brewer and G. M. Rosenblatt, Adv. in High Temperature Chemistry, 2, 1, (1969)

75. R. D. Freeman, " Thermodynamic Properties of Binary Sulfides", Oklahoma State University Research Foundation, 1962

76. S. P. Davis and J. Phillips, "Berkeley Newsletter", an informal but regular newsletter from the University of California, Physics and Astronomy Departments, listing recent references and reporting on work in progress.

77. R. S. Mulliken; University of Chicago, unpublished report on references to diatomic spectra, 1960.

78. R. F. Barrow and P. P. DuParc, in "Elemental Sulfur", Interscience Publishers, N. Y., 1965.

79. C. S. G. Phillips and R. J. P. Williams, "Inorganic Chemistry", Vol. 1, Page 77, Oxford University Press, N. Y., 1965.

80. P. Coppens, Ph.D. Thesis, Free University, Bruxelles, Belgium, 1966.

81. B. Scholliers, Ph.D. Thesis, Free University, Bruxelles, Belgium, 1967.

82. R. Colin, Can. J. Phys. 47, 979 (1969).

83. P. Goldfinger, U.S. Air Force reports WADD TR 60-782, Part I to XXX, 1950 - 1968.

84. J. Drowart and P. Goldfinger, Quart. Rev. 20, 545 (1966).

85. J. M. Ricks and R. F. Barrow, Can. J. Phys. 47, 2423 (1969).

86. P. Goldfinger and M. Jeunehomme, Trans. Faraday Soc. 59, 2851 (1963).

TABLES:

Table 1: Organization of sulfides

Table 2: Electronic States of Diatomic Sulfides. $T_e$ = transition energy in reciprocal micrometers; $\omega_e$ = vibrational quantum; $B_e$ rotational constant, and $r_e$ = internuclear distance at equilibrium distance. In cases where data is incomplete, $T_0$ and $\omega_0$ are listed. For $S_2$, $\Delta G_{1/2}$ ($= \omega_e - 2\omega_e x_e$) is listed instead of $\omega_e$. The literature always refers to the latest available reference. Earlier work is summarized in references 34, 54, 55, 63, 76 and 77.

Table 3: Dissociation Energies of Gaseous Diatomic Sulfides and Oxides (kcal/mole)

Table 4: Standard Heat of Formation, $\Delta H^\circ_{f(298)}$, of Diatomic Sulfides (kcal/mole)

TABLE 2

ELECTRONIC STATES OF DIATOMIC SULFIDES

| Electronic State | $T_e$ ($\mu m^{-1}$) | $\omega_e$ ($cm^{-1}$) | $B_e$ ($cm^{-1}$) | $r_e$ (Å) | References |
|---|---|---|---|---|---|
| AlS | | | | | |
| A $^2\Sigma^+$ | 2.3434 | 510.91 | 0.2461 | | McKinney (57) |
| X $^2\Sigma^+$ | 0 | 617.12 | 0.2799 | | |
| BS | | | | | |
| $^2\Pi_{3/2}$ | 3.8899 | 884.7 | 0.702 | | Zeeman (14) |
| $^2\Pi_{1/2}$ | 3.8785 | 884.7 | 0.702 | | |
| C $^2\Pi_{1/2}$ | 1.5997 | 749.4 | 0.621 | | |
| A $^2\Pi_{3/2}$ | 1.5663 | 749.4 | 0.621 | | |
| X $^2\Sigma$ | 0 | 1173.6 | 0.775 | | |
| BaS | | | | | |
| A (?) | 2.5934 | 253.0 | | | Barrow (58) |
| X (?) | 0 | 377.1 | | | |
| BeS | | | | | |
| B $^1\Sigma^+$ | 2.5868 | 850.4 | 0.726 | 1.818 | Gissane (59) |
| X $^1\Sigma^+$ | 0 | 997.4 | 0.787 | 1.745 | |
| BiS | | | | | |
| A $^2\Pi_{1/2}$ | 1.3292 | 303.7 | | | Barrow (60) |
| X $^2\Pi_{1/2}$ | 0 | 408.7 | | | |

TABLE 2 (Cont'd)

ELECTRONIC STATES OF DIATOMIC SULFIDES

| Electronic State | $T_e$ ($\mu m^{-1}$) | $\omega_e$ ($cm^{-1}$) | $B_e$ ($cm^{-1}$) | $r_e$ (Å) | References |
|---|---|---|---|---|---|
| CS | | | | | |
| A $^1\Pi$ | 3.8913 | 1072.3 | 0.781 | | Lagerqvist (19) |
| X $^1\Sigma^+$ | 0 | 1285.1 | 0.821 | | Barrow (20) |
| GeS | | | | | |
| B | 3.8890 | 310.4 | | | Drummond (61) |
| A | 3.2890 | 375.0 | | | Meyer (62) |
| a $^3\Pi$ | 2.0000 | | | | |
| X $^1\Sigma^+$ | 0 | 575.8 | | | |
| HS and (DS) | | | | | |
| A $^2\Sigma$ | 3.1036 | 1971.0 (1415.0) | | | Ramsay (4) |
| X $^2\Pi$ | 0 | 2711.6 (1947.0) | 9.660 (4.950) | 1.34 (1.34) | Pathak (5) |
| MgS | | | | | |
| B | 2.3056 | 495.3 | | | Barrow (63) |
| A | 0 | 525.2 | | | |

TABLE 2 (Cont'd)

ELECTRONIC STATES OF DIATOMIC SULFIDES

| Electronic State | $T_e$ ($\mu m^{-1}$) | $\omega_e$ ($cm^{-1}$) | $B_e$ ($cm^{-1}$) | $r_e$ (Å) | References |
|---|---|---|---|---|---|
| NS | | | | | |
| F $^2\Sigma$ | 5.6000 | | | | Smith (26) |
| E $^2\Pi$ | 5.2000 | | | | Peyron (27) |
| (d) $^2\Sigma$ | 4.4280 | | | | |
| C $^2\Sigma$ | 4.3385 | 1401.0 | 0.827 | 1.447 | |
| B $^2\Pi$ | 3.0190<br>3.0105 | 800.0 | 0.612 | 1.680 | |
| A $^2\Delta$ | 3.9918<br>3.9882 | 942.0<br>960.0 | 0.676 | 1.577 | |
| X $^2\Pi$ | 0 | 1219.0 | 0.774 | 1.496 | |
| OS | | | | | |
| B $^3\Sigma^-$ | 4.1629 | 630.4 | 0.502 | 1.775 | Colin (82) |
| A $^3\Pi_2$ | 3.8617 | 412.7 | 0.616 | | Abadie (64) |
| A $^3\Pi_1$ | 3.8455 | 413.3 | 0.611 | 1.609 | Norrish (32) |
| A $^3\Pi_0$ | 3.8293 | 415.2 | 0.607 | | |
| b $^1\Sigma^+$ | 1.0510 | 1067.7 | 0.703 | 1.500 | |
| a $^1\Delta$ | ~0.6350 | | 0.709 | 1.493 | |
| X $^3\Sigma^-$ | | 1148.2 | 0.721 | 1.481 | |
| PS | | | | | |
| C | 3.4687 | 535.5 | 0.260 | 2.030 | Dressler (27, 28) |
| B | 2.2270<br>2.2170 | 510.0 | | | |
| X $^2\Pi$ | 0 | 739.5 | 0.290 | 1.920 | |

TABLE 2 (Cont'd)

ELECTRONIC STATES OF DIATOMIC SULFIDES

| Electronic State | $T_e$ ($\mu m^{-1}$) | $\omega_e$ ($cm^{-1}$) | $B_e$ ($cm^{-1}$) | $r_e$ (Å) | References |
|---|---|---|---|---|---|
| PbS | | | | | |
| F | 4.7770 | 370.0 | | | Vago (65) |
| E | 2.9651 | 299.3 | | | |
| D | 2.5024 | 284.0 | | | |
| C | 2.3213 | 303.9 | | | |
| B | 2.1848 | 282.2 | | | |
| A $^1\Sigma^+$ | 1.8851 | 261.1 | 0.086 | 2.666 | |
| X $^1\Sigma^+$ | 0 | 428.1 | 0.106 | 2.394 | |
| $S_2$ | | | | | |
| c' $^1\Sigma_u^+$ | 6.4000 | 785.0 | >0.290 | <1.900 | Lakshminarayana (66) |
| $^1\Delta_u$ | 5.9900 | | | | Barrow (67) |
| c $^1\Sigma_u^-$ | 5.9900 | 814.0 | >0.290 | <1.900 | Barrow (68) |
| D $^3\Pi_g$ | 5.8700 | 786.0 | 0.306 | <1.890 | Ricks (69) |
| e $^3\Sigma_u^-$ | 5.6984 | | >0.290 | <1.890 | |
| g $^1\Delta_u$ | ≈5.6700 | 811.0 | 0.322 | 1.811 | |
| C $^3\Sigma_u^-$ | 5.5581 | 822.5 | 0.321 | 1.810 | |
| f $^1\Delta_u$ | ~4.1000 | 432.8 | 0.227 | 2.166 | |
| e $^1\Pi_g$ | ~3.7000 | 533.7 | 0.240 | 2.080 | |
| B' $^3\Pi_{g,i}$ | ~3.6000 | - | 0.244 | 2.080 | |
| B $^3\Sigma_u^-$ | 3.1689 | 428.5 | 0.224 | 2.172 | |
| $^1\Pi$ | ~3.2000 | | | | |

TABLE 2 (Cont'd)

ELECTRONIC STATES OF DIATOMIC SULFIDES

| Electronic State | $T_e$ ($\mu m^{-1}$) | $\omega_e$ ($cm^{-1}$) | $B_e$ ($cm^{-1}$) | $r_e$ (Å) | References |
|---|---|---|---|---|---|
| $S_2$ (cont'd) | | | | | |
| B" $^3\Pi_u$ | ~3.1700 | | >0.200 | <2.280 | |
| A $^3\Sigma_u^+$ | ~2.2500 | 477.0 | | | |
| c $^1\Sigma_u^-$ | ~2.3000 | | 0.230 | 2.150 | |
| A' $^3\Delta_{u,i}$ | ~2.1900 | ~483.0 | 0.228 | 2.150 | |
| b $^1\Sigma_g^+$ | ~0.9000 | ~693.0 | | | |
| a $^1\Delta_g$ | 0.5000 | 695.9 | 0.293 | 1.900 | |
| X $^3\Sigma_g^-$ | 0 | 719.4 | 0.295 | 1.892 | |
| SiS | | | | | |
| E | 4.1924 | 403.5 | 0.266 | 2.059 | Nilheden (70) |
| D $^1\Pi$ | 3.5029 | 512.0 | 0.304 | 1.928 | Robinson (71) |
| X $^1\Sigma^+$ | 0 | 749.5 | | | |
| SnS | | | | | |
| E | 3.2940 | 295.1 | | | Meyer (72, 73) |
| D $^1\Pi$ | 2.8360 | 331.9 | 0.120 | 2.357 | |
| C ($^3\Sigma$) | 2.3613 | 324.0 | | | |
| B ($^3\Sigma$) | 2.2756 | 325.0 | | | |
| a ($^3\Pi$) | 1.8300 | | | | |
| X $^1\Sigma$ | 0 | 487.7 | 0.137 | 2.209 | |

TABLE 3

DISSOCIATION ENERGIES OF GASEOUS DIATOMIC SULFIDES AND OXIDES

| Sulfide[a] | $D^\circ_{298}$ kcal/mole | Oxide[b] | $D^\circ_{298}$ kcal/mole |
|---|---|---|---|
| AlS | (95)* | AlO | 115 ± 5* |
| BS | 123 ± 18 | BO | 192 ± 5 |
| BaS | 95 ± 5* | BaO | 131 ± 5* |
| CaS | 72 ± 5 | CaO | 84 ± 7 |
| CS | 183 ± 5 | CO | 257 ± 1 |
| CoS | 136 ± 2* | CoO | 190 ± 2* |
| GeS | 133 ± 4 | GeO | 158 ± 3 |
| HS | 81 ± 0.5* | HO | 101 ± 0.3* |
| HgS | (64.4) | HgO | (65) |
| InS | 68 ± 4* | InO | ≤(76)* |
| LaS | 137 ± 2* | LaO | 137 ± 2* |
| MgS | (68.6) | MgO | 79 ± 7 |
| MnS | 65 ± 5* | MnO | 87 ± 5* |
| NS | 116.6 ± 25 | NO | 150.8 ± 0.2 |
| PS | 124.5 ± 15 | PO | 119.6 ± 3 |
| PbS | 76 ± 5 | PbO | 89.4 ± 2 |
| $S_2$ | 101 ± 0.5* | SO | 124 ± 0.5* |
| ScS | 113 ± 2 | ScO | 161 ± 2 |
| SeS | (90)* | SeO | (100)* |
| SiS | 158.6 ± 1 | SiO | 192 ± 2 |

TABLE 3 (Cont'd)

| Sulfide[a] | $D^{\circ}_{298}$ kcal/mole | Oxide[b] | $D^{\circ}_{298}$ kcal/mole |
|---|---|---|---|
| SnS | 111.7 ± 3 | SnO | 127 ± 2 |
| SrS | 80 ± 4* | SrO | 92 ± 6* |
| TeS | (80)* | TeO | (90)* |
| TiS | 108 ± 7* | TiO | 160 ± 5* |
| US | 118.6 ± 11 | UO | 182 ± 3 |
| YS | 126 ± 2* | YO | 169 ± 2* |

* $D^{\circ}_{\circ}$ values

(a) Main Sources:

JANAF Tables
Spectroscopic Data
Heats of Formation and Heats of atomization data
References (80) and (81)

(b) Data from:

Brewer and Rosenblatt, reference (74)
Paul Coppens, reference (80)
Bert Scholliers, reference (81)

TABLE 4

STANDARD HEAT OF FORMATION, $\Delta H^{\circ}_{f(298)}$, OF

DIATOMIC SULFIDES (kcal/mole)*

| Molecule | $\Delta H^{\circ}_{f(298)}$ | Molecule | $\Delta H^{\circ}_{f(298)}$ |
|---|---|---|---|
| AlS (g) | +48 ± 20 | MgS (s) | -83 |
| BS (g) | +80.5 ± 18 | MnS (s) | -49.4 ± 0.4 |
| BaS (g) | +54 | NS (g) | +63 ± 25 |
| BaS (s) | -108.1 ± 8.0 | NiS (s) | -22.2 ± 1.4 |
| BeS (s) | -55.9 ± 2.0 | PS (g) | +22.5 ± 5.0 |
| CS (g) | +55.0 ± 5.0 | PbS (g) | +37.2 ± 5.0 |
| CaS (g) | +37 | PbS (s) | -23.0 ± 0.5 |
| CaS (s) | -114.5 ± 2.0 | PtS (s) | -19.7 ± 2.0 |
| CdS (s) | -37.6 ± 1.0 | $S_2$ (g) | +30.84 ±0.15 |
| CeS (s) | -109.1 ± 1.0 | SO (g) | +1.64 ± 0.3 |
| CoS (s) | -21.1 ± 3.0 | SiS (g) | +16.93 |
| CuS (s) | -12.5 ± 0.8 | SnS (g) | +27.1 ± 3.0 |
| FeS (s) | -23.7 ± 0.7 | SnS (s) | -25.3 ± 10 |
| GaS (s) | -46.4 ± 3.0 | SrS (g) | +51.0 |
| GeS (g) | +22.9 ± 4.0 | SrS (s) | -108.1 ± 8.0 |
| GeS (s) | -17.0 ± 3.0 | TiS (s) | -63.4 ± 6.0 |
| HS (g) | +34.6 ± 4 | ThS (s) | -105 ± 10 |
| HgS (s) | -12.7 ± 1.5 | US (g) | +74 ± 8 |
| InS (s) | -33.6 ± 3.0 | US (s) | -83 ± 8 |
| MgS (g) | +33.2 | ZnS (s) | -49.2 ± 0.5 |

*From R.D. Freeman, "Thermodynamic Properties of Binary Sulfides", Oklahoma State University Research Foundation (1962). Reference (75). JANAF Tables.

FIGURE CAPTIONS:

Figure 1: Experimental apparatus. All equipment is described in reference 3.

a) Quartz absorption cell for optical studies; H = heater; Q = quartz cell with side arm; M = metal sulfide mixture.

b) King carbon resistance furnace; V = vacuum port for outgassing and introducing inert argon atmosphere; W = observation window; C = carbon tube heater; MS = metal sulfide.

c) Quartz Knudsen double furnace; the orifice diameter is 1/2 mm. The bottom furnace temperature is adjusted to control the vapor pressure. The front furnace allows overheating of the vapor. MS = metal sulfide.

d) Carbon Knudsen cell. The sulfide container is a 6 mm diam. carbon tube with a 0.5 mm diam. effusion hole. B: flange; C: water cooled electrodes; E: molybdenum heat shield and collineator; F: Knudsen cell; G: effusion hole.

e) Flashphotolysis cell. D = cell for reagents; F = xenon flash lamp; G = gas inlet; HV = high voltage leads.

f) Microwave discharge cell. A = 0.1 torr argon as starter gas; G = baked quartz tube; MS = metal sulfide.

g) Matrix isolation Dewar. a = cold sapphire sample carrier; $N_2$ = liquid nitrogen reservoir with copper shield; He = liquid helium; Vac = vacuum connection.

Figure 2: Presently known gaseous diatomic sulfides and solid binaries with approximately 1:1 ratio.

Figure 3: Low lying electronic energy levels of diatomic sulfides. Levels are only identified by letter names. The full spectroscopic characteristics of each state are listed in Table 2.

Figure 4: Dissociation energy of selected oxides and sulfides. a) Row II compounds; b) Row IV compounds.

Figure 5: Bond energies of metals (M) and heats of formation of sulfides (MS) from atomic metal atoms. For the upper curve the ordinate is $\Delta H_f - \Delta H_{atomization\ (metal)}$; for the lower, it is the bond energy of the pure metal.

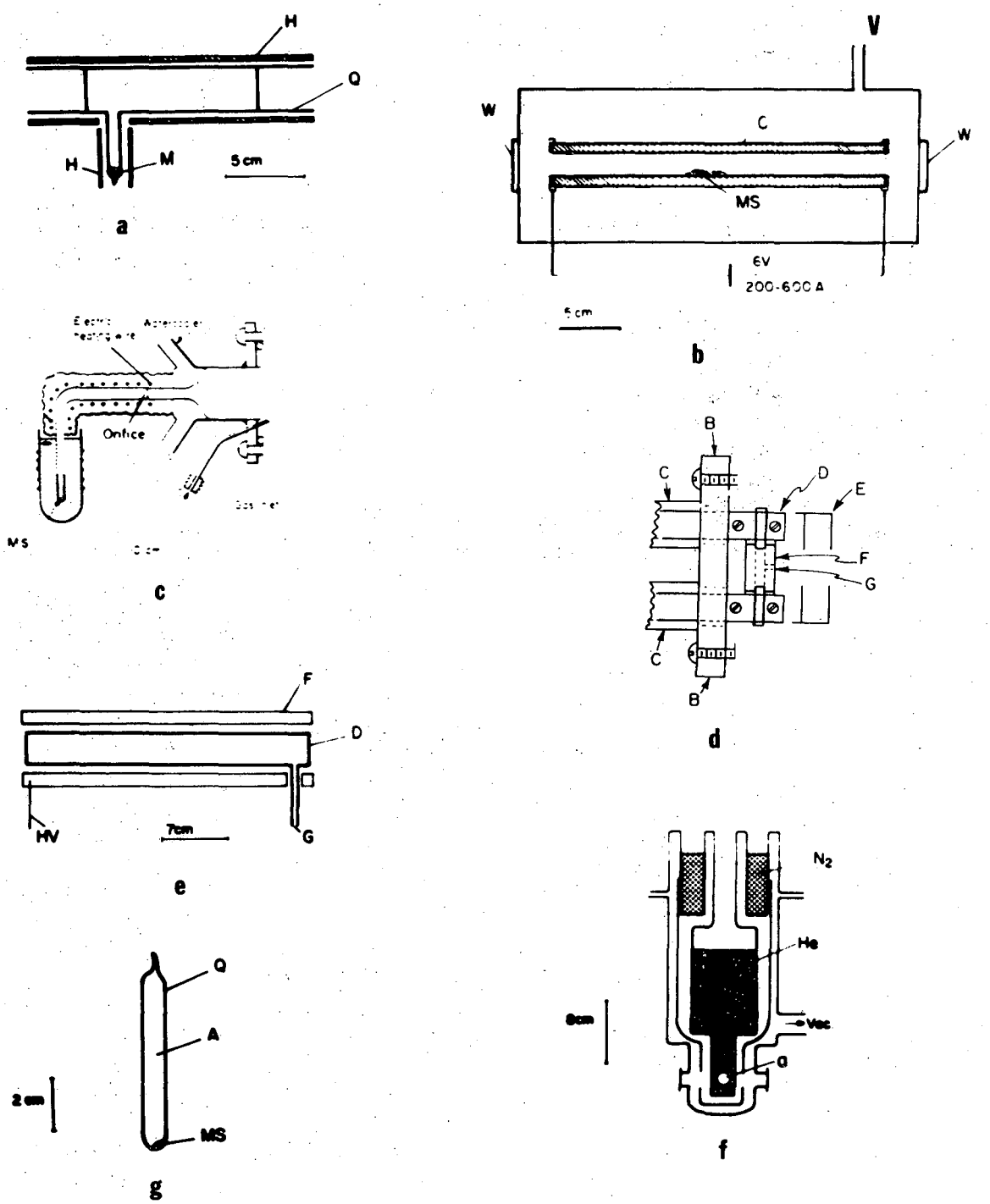


XBL 702-356

Fig. 1

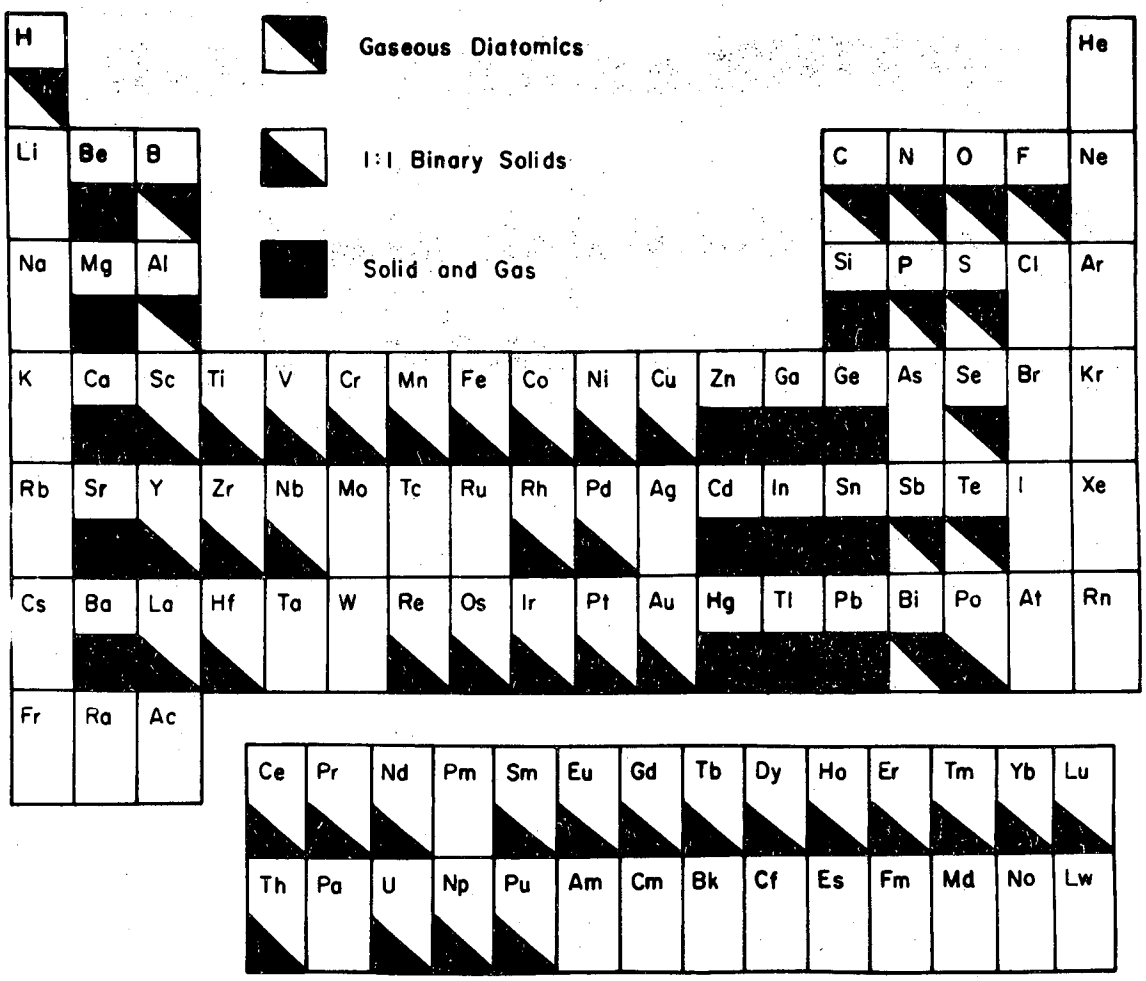


XBL 702-349

Fig. 2

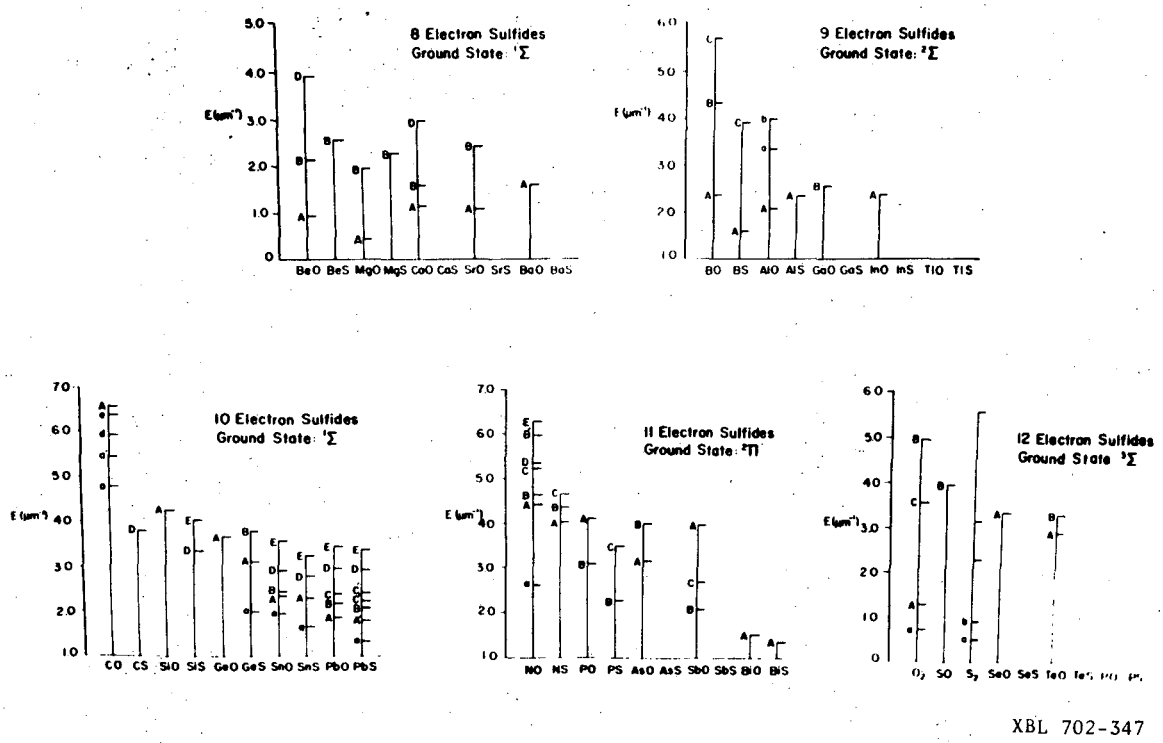


XBL 702-347

Fig. 3

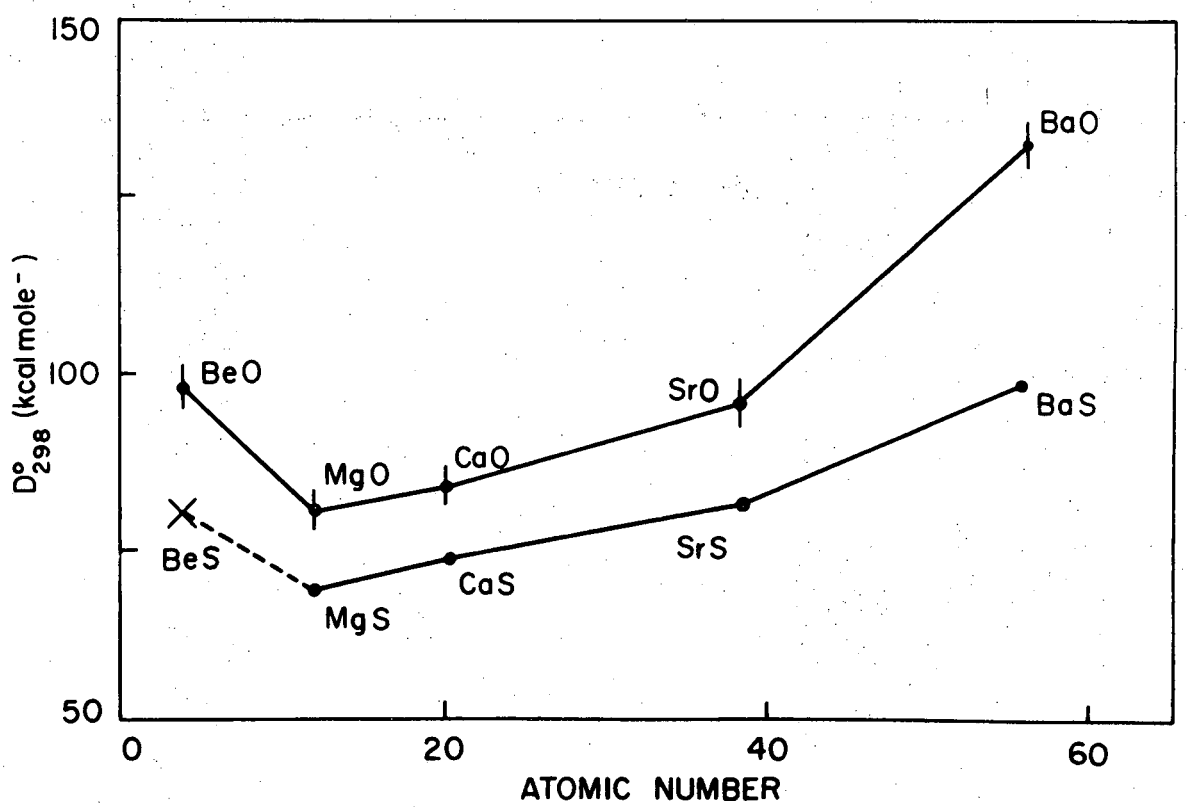


XBL 702-351

Fig. 4a

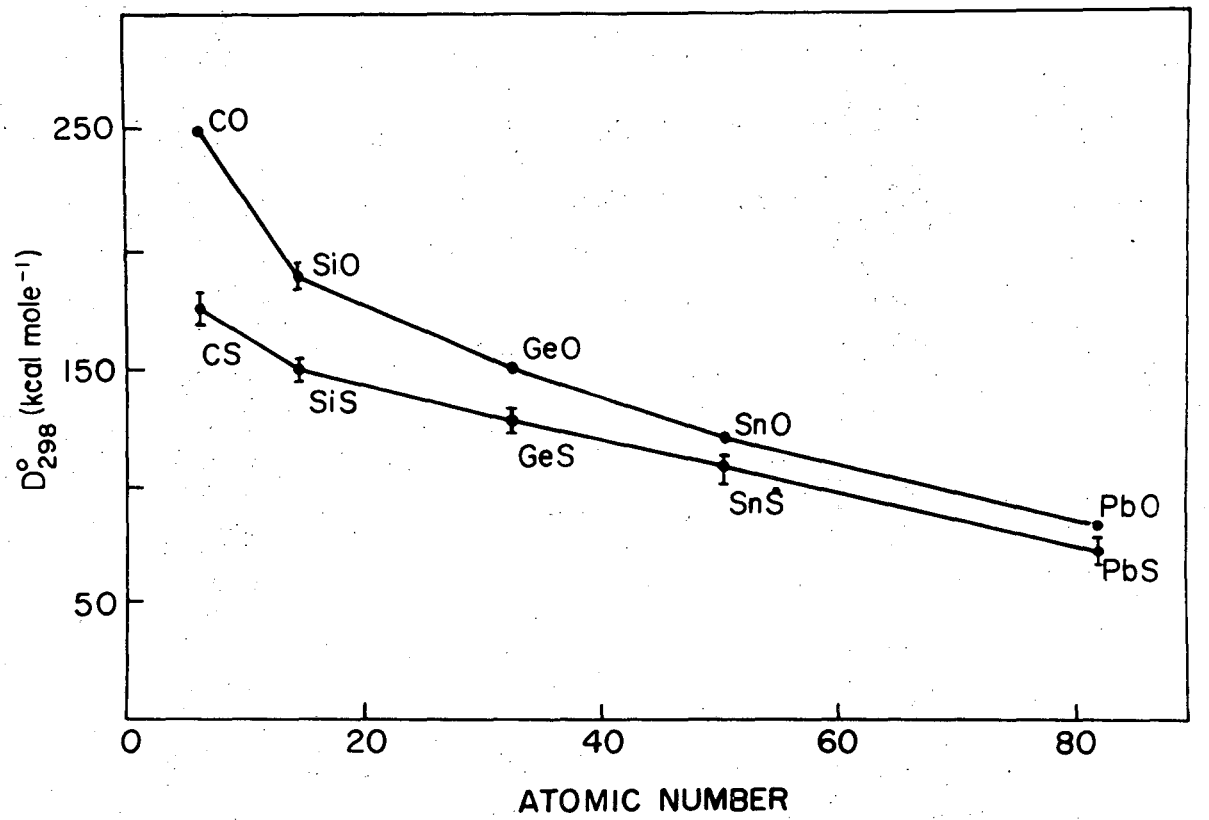


XBL 702-350

Fig. 4b

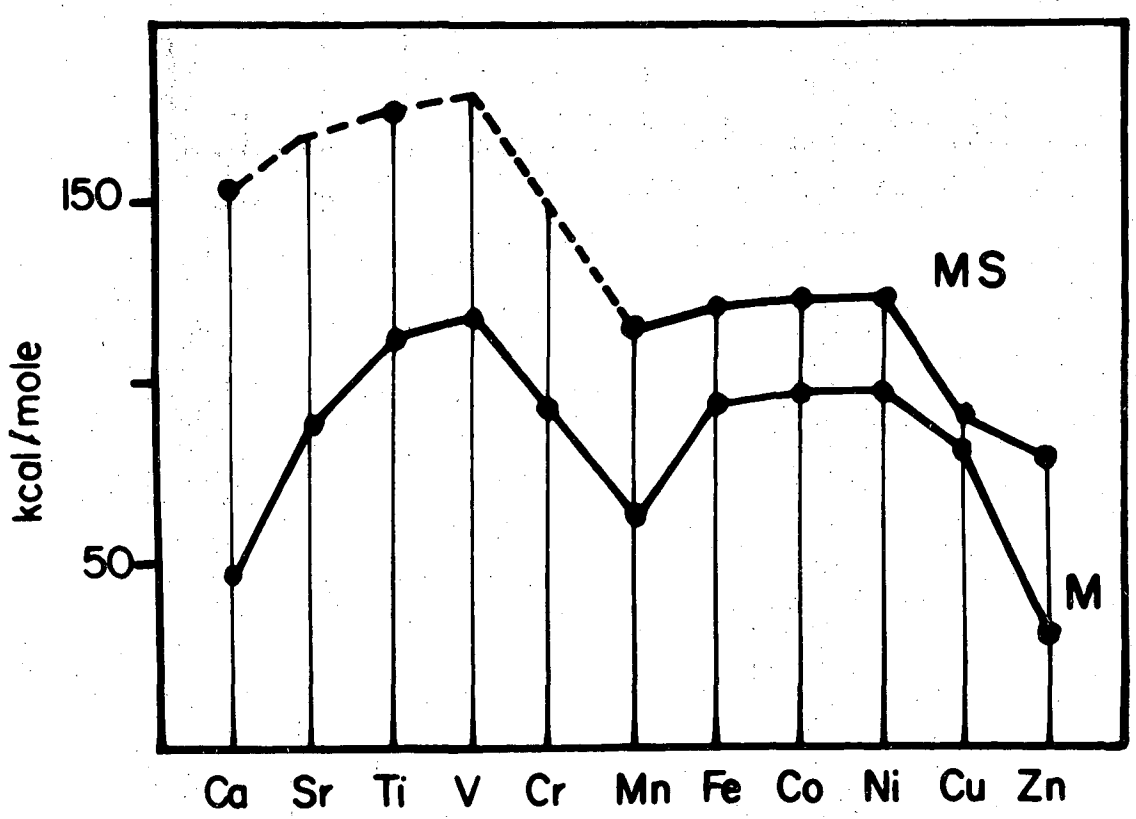


XBL 702-348

Fig. 5

LEGAL NOTICE

*This report was prepared as an account of Government sponsored work. Neither the United States, nor the Commission, nor any person acting on behalf of the Commission:*

*A. Makes any warranty or representation, expressed or implied, with respect to the accuracy, completeness, or usefulness of the information contained in this report, or that the use of any information, apparatus, method, or process disclosed in this report may not infringe privately owned rights; or*

*B. Assumes any liabilities with respect to the use of, or for damages resulting from the use of any information, apparatus, method, or process disclosed in this report.*

*As used in the above, "person acting on behalf of the Commission" includes any employee or contractor of the Commission, or employee of such contractor, to the extent that such employee or contractor of the Commission, or employee of such contractor prepares, disseminates, or provides access to, any information pursuant to his employment or contract with the Commission, or his employment with such contractor.*

*TECHNICAL INFORMATION DIVISION*
*LAWRENCE RADIATION LABORATORY*
*UNIVERSITY OF CALIFORNIA*
*BERKELEY, CALIFORNIA 94720*