Submitted to J. of Chemical Physics

UCRL-19171
Preprint

c.2

RECEIVED
LAWRENCE
RADIATION LABORATORY

FEB 26 1970

LIBRARY AND
DOCUMENTS SECTION

THE COLLISION INDUCED DISSOCIATION OF MOLECULAR IONS

M. H. Cheng, M. Chiang, E. A. Gislason,
B. H. Mahan, C. W. Tsao, and A. S. Werner

January 1970

AEC Contract No. W-7405-eng-48

TWO-WEEK LOAN COPY

This is a Library Circulating Copy which may be borrowed for two weeks. For a personal retention copy, call Tech. Info. Division, Ext. 5545

LAWRENCE RADIATION LABORATORY
UNIVERSITY of CALIFORNIA BERKELEY

UCRL-19171

4

DISCLAIMER

This document was prepared as an account of work sponsored by the United States Government. While this document is believed to contain correct information, neither the United States Government nor any agency thereof, nor the Regents of the University of California, nor any of their employees, makes any warranty, express or implied, or assumes any legal responsibility for the accuracy, completeness, or usefulness of any information, apparatus, product, or process disclosed, or represents that its use would not infringe privately owned rights. Reference herein to any specific commercial product, process, or service by its trade name, trademark, manufacturer, or otherwise, does not necessarily constitute or imply its endorsement, recommendation, or favoring by the United States Government or any agency thereof, or the Regents of the University of California. The views and opinions of authors expressed herein do not necessarily state or reflect those of the United States Government or any agency thereof or the Regents of the University of California.

The Collision Induced Dissociation of Molecular Ions

M. H. Cheng, M. Chiang, E. A. Gislason, B. H. Mahan,
C. W. Tsao, and A. S. Werner

Department of Chemistry and Inorganic Materials Research Division of the Lawrence Radiation Laboratory, University of California, Berkeley, California.

Abstract

Velocity vector distributions of the fragment ion products of the dissociative collisions of O_2^+, N_2^+, NO^+, and N_2O^+ with helium have been determined, using projectile-target relative kinetic energies which are one to three times the bond energy of the molecule. The most probable dissociation event produces a fragment ion whose velocity is very nearly the same as that of the original projectile ion. Fragment ions also appear at smaller velocities and larger scattering angles, and the importance of these features increase with increasing initial relative energy. Three models for the dissociation are discussed, and it is concluded that a version of the stripping model is most nearly consistent with the data.

Recently, the energy and angular distribution of the fragment ions from the collision induced dissociation of H_2^+ and other diatomic molecular ions has been the subject of several experimental[1-8] and theoretical[9,10] investigations. Most work has involved the use of kilovolt ion beams, although more recently some experiments[6,7] with low energy ions have been conducted. In the case of the high energy collisions of H_2^+, it seems well established[3,4,5] that dissociation occurs principally by means of a collisional excitation of H_2^+ to the repulsive $2p\sigma_u$ state, and a lesser degree by excitation to $2p\pi_u$ and the totally ionized state. Other features of the proton velocity spectrum have been attributed[4] to excitations to the vibrational continuum of the ground electronic state of H_2^+. In order to assess the importance of this single "strong collision" mode of dissociation at relative kinetic energies which are of the order of magnitude of a few times the bond strength, we have measured the velocity vector distributions of the ionic products of the dissociative collisions of O_2^+, N_2^+, NO^+, and N_2O^+ with He.

EXPERIMENTAL

The apparatus employed in this work has been described in detail in a previous publication.[11] In brief, it consists of a magnetic mass spectrometer for preparation of the primary ion beam of known energy, a scattering cell containing the target gas, a 90° spherical electrostatic energy analyser, a quadrupole mass spectrometer, and an ion counter. The energy

distribution of ions scattered at various laboratory angles from the primary beam was determined by sweeping the electrostatic energy analyzer, and the angular distribution of ions of a fixed energy was measured by rotating the entire detection train with respect to the primary ion beam. To generate contour maps of scattered ion intensity, angular scans were made at a number of different analyzer energies (typically 15 energies each with points taken at 15-20 angles). From these data a series of curves of normalized intensity versus angle at fixed energy and intensity versus energy at fixed angle were produced by drawing smooth curves through the data points. Intensity contours were then determined by locating all points of a given intensity on these curves. The maps then give relative values of the specific intensity, which is defined as the number of product counts per second, normalized to unit incident beam strength, scattering gas pressure, scattering volume, and velocity space volume.

In order to avoid difficulties associated with operating a heated filament in an oxidizing atmosphere, all molecular ions were extracted from a microwave discharge through the appropriate parent gases. A Broida-type cavity designed to operate at 3000 Mc was powered by a QK-61 magnetron and produced a discharge in a 1-cm dia. quartz tube. The plasma potential was set by the extracting aperture. The energy spread of the ions from such a source is larger than that produced by a conventional electron impact source, but much smaller

than that displayed by ions from a 13 Mc radio-frequency discharge.

The microwave discharge has another important advantage. From the operating characteristics of the discharge, the average electron energy can be deduced to be approximately 5 eV. Relatively few electrons have energies greatly in excess of 10 eV, and consequently most of the ionization is produced by electrons which have energies which are not much greater than the ionization energy of the gas. As a result, the number of metastable excited ions such as O_2^+ ($^4\pi_u$) which are produced is smaller in a microwave discharge than in a conventional 50 eV electron impact source. Beam attenuation experiments of the type described by Turner et al.[12] showed that the momentum analyzed NO^+ and O_2^+ beams contained less than 3% excited metastable ions.

RESULTS AND DISCUSSION

Because the products of these dissociative molecular ion-atom collisions consist of three free particles, and the translational momentum of only one of these products is measured, the system is kinematically underdetermined. Some information can still be drawn from conventional velocity vector diagrams, however. Two such diagrams are shown in Fig. 1. The initial velocity of the target is taken to be zero, since the average speed of the target helium atoms is usually less than 0.05 times the projectile velocity. The velocity of the center-of-mass

of the target-projectile system is a useful reference, and is shown in the diagrams of Fig. 1. In addition, for discussion of the impulse model of dissociation, the velocity of the center-of-mass of the target and one of the atoms in the projectile is a significant quantity, and is also indicated in Fig. 1. Other quantities in these diagrams will be defined and discussed subsequently in connection with specific models for the dissociation process. Table 1 gives the energies required to form the various fragments from the ground state of the molecular ions.

Figures 2-8 show contour maps of the specific intensity of the fragment ions from the dissociative collisions of O_2^+, N_2^+, NO^+, and N_2O^+ with helium. The values of the intensities on different maps are directly comparable, except that no attempt has been made to correct for the (probably small) variation of the transmission of our apparatus with ion mass.

Figures 2 and 3 are typical of several of our measured distributions of O^+ from O_2^+-He collisions. The overall intensity is quite small, and the intensity maximum occurs at a velocity which is only a little less than that of the original O_2^+ beam. As the initial kinetic energy of the projectile is increased, the total intensity and the angular region over which O^+ is found increase, but the velocity at which the maximum intensity occurs remains very nearly equal to the velocity of the original projectile. We find some fragment ions that are moving

more rapidly than the original beam particles, but most product ions appear at smaller velocities.

As Figs. 4-9 show, similar remarks can be made about the velocity distribution of fragment ions from N_2^+, NO^+, and N_2O^+, although each distribution differs in detail from the others. Figures 5 and 6 show that the N^+ and O^+ from NO^+ are distributed in a superficially similar manner, except that the N^+ appears in greater intensity, and is spread over a somewhat larger region of velocity space. The difference in the distributions of these two ions is even more obvious in Fig. 7, which shows the intensity profiles of these ions measured as a function of velocity at zero degrees in the laboratory frame. The N^+ distribution is much less noticeably peaked than the O^+ distribution. Figure 8 shows that the intensity of O^+ from N_2O^+ is quite significantly larger than the intensities of the fragment ions from the diatomic molecules. In addition, the amount of O^+ that is produced with velocities greater than that of the projectile is clearly greater than what is observed when the diatomics dissociate. Finally, Fig. 9 demonstrates that the NO^+ from N_2O^+-He collisions moves noticeably slower than the original projectile, whereas the O^+ fragment produced in collisions of the same energy has its most probable velocity very close to that of the projectile.

Relative total cross sections were determined by integrating the specific intensity of the fragment ions over center-of-mass angles and velocity. These relative cross sections were put

on an absolute basis by the following procedure. The total cross section for scattering of O^+ by He was determined by measuring the attentuation of a beam of O^+ by several different known pressures of helium. Then a contour map of the distribution of O^+ scattered by helium was determined and integrated to give a total cross section in arbitrary units. Comparison between the absolute cross section determined by attenuation and the value obtained by integrating the scattered intensity then gave a scale factor which was used to convert all relative cross sections to absolute values.

The values of the total cross sections determined in this manner are given in Table II. All the cross sections are quite small, even when the relative energy of collision considerably exceeds the bond dissociation energy. The small cross sections show clearly that the "strong collision" or single shot mode of dissociation of diatomic molecules is not of great importance in thermal systems even at very high temperatures.

Our experiments and their results are most nearly comparable to those of Champion, Doverspike, and Bailey,[1] who studied the collision induced dissociation of D_2^+ by argon and nitrogen targets, in the range of 5-120 eV laboratory energy. These investigators found a very prominent maximum in the D^+ intensity at a velocity equal to that of the original projectile. In addition, they detected a less intense feature which extended over a broad range of velocities, and was nearly symmetric about the value of the projectile velocity. These results

resemble what we have found for O_2^+, N_2^+, and NO^+ dissociations as far as the most probable velocity of the fragment ions is concerned. However, while a relatively large fraction of the product D^+ from D_2^+ dissociations recoils from the collision at velocities well in excess of the projectile velocity, we found no such result in the O_2^+, N_2^+, and NO^+ dissociations.

Recently, Moran, Petty, and Hedrick[8] have studied the dissociation of N_2^+, O_2^+, CO^+, and NO^+ induced by collisions with their parent neutral molecules by using the Aston band technique in a single mass spectrometer. In each system projectile ions had energies of 2000 eV, and the velocity distribution of product ions scattered at zero degrees in the laboratory system was measured. These workers report data only for product ions with velocities greater than the projectile velocity, so any comparison with our measured intensity profiles is necessarily incomplete. It is clear, however, that Moran et al.[8] find a greater intensity of ions which have recoiled with velocities substantially in excess of the projectile velocity than we have found in our work. This difference is undoubtably connected with the difference in the projectile energies employed in the two sets of experiments.

There are several models which can be used to discuss the collisional dissociation of molecular ions. One of the simplest involves the assumption that the collision produces an excitation of the molecule ion to an unbound electronic state which is followed by dissociation of the excited ion.[9,10] This two-step model, with minor refinements, has been used extensively and successfully to explain the features observed

in the high energy collisional dissociation of H_2^+, and has also been applied by Moran et al.[8] to their data on the N_2^+, O_2^+, CO^+, and NO^+ systems. The kinematics of this process can be understood with the help of Fig. 1a. In the first step, the excitation of the molecular ion is accompanied by a decrease in its velocity. If U is the internal excitation produced by the collision, and $\underset{\sim}{g}'$ is velocity of the molecule relative to the target after the collision, then

$$\underset{\sim}{g}' = \underset{\sim}{\ell} \left[2(E_r - U)/\mu_{tp} \right]^{1/2}$$

where E_r is the initial relative energy of the collision, and μ_{tp} is the reduced mass of the target-projectile system. The quantity $\underset{\sim}{\ell}$ is a unit vector in the direction of the new target-projectile relative velocity. If m_t is the mass of the target, and m_p that of the projectile, multiplication of g' by $m_t/(m_t + m_p)$ gives the velocity of the excited molecule relative to the projectile-target center-of-mass velocity. The condition that the excitation energy U exceed the dissociation energy D defines a spherical region of velocity space, indicated in Fig. 1a, which contains all collisionally excited molecules subject to dissociation.

If all the excitation energy in excess of the bond energy is converted to translational energy of the dissociating fragments, the recoil velocity of a fragment of mass m_1 relative to the center-of-mass of the dissociating molecule is

$$\underset{\sim}{n} \left[2(U - D)/\mu_{12} \right]^{1/2} m_2/(m_1 + m_2)$$

where $\underset{\sim}{n}$ is a unit vector in the final direction of the relative velocity of the dissociating fragments, and μ_{12} is the reduced mass of the dissociating molecule. The final laboratory velocity $\underset{\sim}{v}_f$ of the product of mass m_1 is then the vector sum of the velocity of the center-of-mass of the projectile-target system, the velocity of the excited molecule relative to this same center-of-mass velocity, and the recoil velocity of the fragment of mass m_1 relative to the center-of-mass of the dissociating molecule. Thus

$$\underset{\sim}{v}_f = \underset{\sim}{v}_o \, m_p/(m_t+m_p) + \underset{\sim}{\ell}\left[2(E_r-U)/\mu_{tp}\right]^{1/2} m_t/(m_t+m_p) + \underset{\sim}{n}\left[2(U-D)/\mu_{12}\right]^{1/2} m_2/(m_1+m_2) \quad (1)$$

Such a construction is indicated in Fig. 1a.

Examination of Eq. (1) shows that depending on the choice of U, $\underset{\sim}{\ell}$, $\underset{\sim}{n}$, the masses, dissociation energy, and initial relative energy of a particular system, $\underset{\sim}{v}_f$ may be greater, less, or equal to the projectile velocity $\underset{\sim}{v}_o$. However, in order to produce atomic ions with a velocity nearly equal to that of the primary beam, the energy of excitation, and the energy and direction of recoil would have to satisfy very special conditions. It is extremely unlikely that these conditions would be met consistently for all initial relative energies for all the systems we have investigated. Furthermore, symmetry considerations suggest that electronic excitation followed by dissociation of the isolated molecule would produce

not just one, but two peaks or two ridges in the atomic ion velocity distribution, corresponding to forward and backward recoil of the atomic ion in the center-of-mass system of the dissociating molecule. If only one peak occurs, it should be symmetric. Only one peak is observed, and it is not symmetric. Thus the two-step model of dissociation appears to be inconsistent with the major features of our observations. While the existence of this mode of dissociation cannot be ruled out entirely, it is not of major importance in these systems.

It should be stressed again that several groups of experimenters[2-4,8] have been able to fit measured product ion velocity distributions by using the two-step model, assuming Franck-Condon excitation to the upper repulsive state, and taking account of the proper distribution of internuclear distances in the projectile ions. In particular, Moran et al.[8] successfully applied this model to their studies of the dissociations of N_2^+, O_2^+, CO^+, and NO^+ at 2000 eV projectile energy. In none of these applications, however, it is clear that the authors took explicit account of the fact that upon collision, the projectile ion slows down by varying amounts depending on the energy required to reach the excited state in a vertical transition. In fact, in the analyses[2-4] of the high energy experiments on H_2^+ and D_2^+, the flowing of the projectile has been ignored entirely, since it is small compared to the total projectile energy. Such an approximation is not

valid for small projectile energies, and for small reduced masses of the target-projectile system. These conditions, which apply to the experiments reported in this paper, force us to take account of the slowing of the projectile and lead us to the conclusion that the simple two-step model does not describe our results adequately.

Another possible simple description of the dissociation process is in the primitive knockout model. In this picture only one of the atoms of the molecular ion collides impulsively with the target, and thereby suddenly acquires a velocity relative to the rest of the molecule. Figure 1b shows that if the collision between the target and one of the projectile atoms is head-on, the maximum relative velocity between the two atoms of the molecule is produced, which has magnitude

$$g = 2m_t v_o/(m_2 + m_t),$$

where m_2 is the mass of the atom which is struck by the target. If this relative velocity satisfies

$$\frac{1}{2}\mu_{12}g^2 \geq D,$$

the molecule will dissociate.

As a result of the head-on collision with one of the atoms, the center-of-mass of excited diatomic ion has a <u>minimum</u> velocity equal to

$$c = \left\{m_1 v_o + m_2 v_o\left[1 - 2m_t/(m_2 + m_t)\right]\right\}/(m_1 + m_2)$$

The dissociation which follows this head-on collision occurs under the influence of the bonding force which slows the

fragment mass m_1 to a velocity

$$v_f = c + \left[g - \left(2D/\mu_{12}\right)^{1/2}\right] m_2/(m_1 + m_2) \qquad (2)$$

Two observations can be made immediately. First, the condition for dissociation requires that the initial relative energy for O_2^+-He collisions is 18.1 eV or greater. In contrast to this prediction, we have observed that dissociation occurs as soon as the initial relative energy exceeds the bond dissociation energy. Threshold energies for the dissociations of N_2^+ and NO^+ were not measured, but in both systems fragment ions were observed at energies below those permitted by the knockout model. The second observation is that Eq. (2) demonstrates that the final velocity of the fragment which suffers no collision will always be smaller than the projectile velocity if the dissociation energy of the molecule is nonzero. Thus the primitive knockout model cannot account for the principal feature of the product distribution, nor can it account for the occurrence of any dissociation at low energies.

The inability of the primitive knockout or impulse model to account for large angle reactive scattering in the N_2^+-D_2 system has been noted[11] earlier. In a subsequent paper which describes our measurements of the velocity distributions of O_2^+ and NO^+ scattered inelastically by He, we will show that the impulse model clearly overestimates the vibrational and rotational excitation which occurs in such collisions. If the simple impulse model overestimates inelasticity and yet predicts

a dissociation threshold higher than is observed, it is of little use in describing the collisions studied here.

Consideration of the experimental data suggests that a picture akin to the ideal stripping model[11] may account for most of the observations. In this model, one atom of the molecule interacts with the target atom, while the other fragment of the molecule proceeds as a spectator and is subject to little or no force. Thus if the spectator is charged, a fragment ion is expected to appear at or very near to the velocity of the original projectile.

In order for this process to occur, the interaction of the target with the atom it strikes must be such as to reduce the force between the molecular fragments to a small or zero value. The mechanism by which this dissolution of the force between bonded atoms occurs has not been specified in the model itself, nor in its various applications to atom transfers.[11,13] In the case of collision induced dissociation, it is possible to imagine at least two mechanisms by which the bonding in the molecular ion may disappear. The collision between the target and one of the atoms may excite the molecular ion to a weakly bonded or slightly repulsive electronic state. The two fragments then would separate under negligible forces, and the atom which had not been disturbed would appear with a velocity near that of the primary beam. Such collision-induced electronic transitions are not unprecidented, even at low relative energies.[13] This description of the stripping process produces a mechanism for the dissociation which is very similar to the simple two-step model discussed earlier. The significant

difference between the two pictures is that in the simple two-step model, the complete projectile molecule is imagined to slow down as a result of the electronic transition, whereas in the stripping model, only one atom in the projectile changes its velocity.

A second way in which the stripping phenomenon may occur is as follows. The collision between the target and one of the atoms in the molecule adiabatically produces a short-lived collision complex with electronic properties such that the bonding between the two atoms of the projectile molecule is greatly diminished. As the interaction between the target and the struck atom occurs, the spectator atom moves with nearly constant velocity, while the struck atom is slowed down. The target then leaves the collision scene and the isolated molecular ion is again in its ground electronic state. However, by this time the two atoms of the molecule will have separated due to the difference in velocity induced by the collision. If the separation is great enough, the bonding forces between the fragments will be small, and the spectator atom will continue to move with nearly its original velocity. Thus the essence of this picture is that violent interaction with the target removes the bonding in the molecule long enough for the atoms to separate to a distance at which their interaction is negligible.

Since the two atoms of even a homonuclear diatomic molecule ion are not dynamically equivalent in the critical

stages of a stripping collision, only one peak in the fragment ion velocity spectrum is expected. This is consistent with observations. The stripping peaks found in this work are in general not as sharp as those found in atom transfer reactions.[11] Some of the atomic ion product which appears at nonzero scattering angles and velocities smaller than the projectile velocity may reasonably be attributed to collisions in which the interaction with the target does not completely eliminate attractive forces between the atoms of the projectile. Thus as the spectator atom leaves the collision scene, it may be subjected to residual bonding forces from its original partner, and be slowed and deflected from the original projectile trajectory. This type of attractive interaction on the outgoing leg of the trajectory may be responsible for the triangular shape of the intensity contours which we have determined.

Another source of the product ion found at velocities less than that of the projectile and at the larger barycentric scattering angles might be collisions in which the spectator particle is produced uncharged, and the product ion is scattered by the target particle. To estimate the velocity distribution of atomic ions that have interacted strongly with the target in a stripping type of collision, we proceed as follows. The result of a target-projectile interaction is a free, transient, target-struck atom complex which moves at the ideal stripping velocity.

$$v = v_o m_a/(m_a + m_t),$$

where v_o is the original projectile velocity, m_t is the target mass, and m_a is the mass of the struck atom. The internal excitation energy of this transient atom-target species is equal to the initial kinetic energy of the mass m_a relative to the target, minus the bond dissociation energy of the projectile, or

$$U_{at} = \frac{1}{2} \mu_{at} v_o^2 - D$$

The transient atom-target species will dissociate to give an ion whose final laboratory velocity is the vector sum of the velocity of the atom-target complex and the recoil velocity of the atomic ion relative to the center-of-mass of the atom-target complex. Thus at a laboratory scattering angle of zero degrees, the atomic ion will be found at

$$v' = v_o m_a/(m_a + m_t) \pm \left[v_o^2 - 2D/\mu_{at} \right]^{1/2} m_t/(m_a + m_t)$$

The smaller value of the velocity given by this expression falls in a range where we have not observed any scattered product. However, the larger velocity has a value which in all cases is less than that of the projectile and falls in the regions of the broad, somewhat weak product intensity features shown in Figs. 2-9. If one considers that in the dissociative collision some momentum may be transferred to the spectator, and that interaction with the target may produce electronically excited ions, the diffuse nature of the scattering at velocities less than that of the projectile may be rationalized.

The mechanism which we feel is most consistent with our experimental results is the version of the stripping model just described. In a sense, it is a combination of the primitive knockout model, in that momentum is transferred impulsively to one atom of the projectile, and the two-step model, in that electronic escitation may be the process responsible for dissolution of the bond of the projectile. Unfortunately it is not a simple matter to test this model quantitatively since a calculation of the product distribution would involve knowledge of the complete potential energy surfaces for the three particles in their ground state and several of them excited electronic states. However, it is possible to reach some firm conclusions which are useful in understanding kinetic processes in chemically more complex systems. The cross sections for dissociation of molecules in single collision events are not large, even when the initial relative translational energy is two to three times the bond dissociation energy. Simple impulsive excitation into the vibrational continuum of the ground state is not an important process, and consequently the "strong collision" model often used in discussions of thermal dissociation process is of doubtful validity.

Acknowledgement: This work was supported by the U. S. Atomic Energy Commission. E.A.G. would like to acknowledge a postdoctoral fellowship from the National Center for Air Pollution Control of the Public Health Service.

Table I. Dissociation Energies

Projectile	Fragments	D (eV)
O_2^+	O^+,O	6.78
NO^+	O^+,N	10.9
NO^+	N^+,O	11.9
N_2^+	N^+,N	8.78
N_2O^+	NO^+,N	1.35
N_2O^+	O^+,N_2	2.47

Table II. Total Cross Sections for Dissociation

System	E_{rel} (eV)	σ ($Å^2$)
$O_2^+ \rightarrow O^+$	8.32	0.013
	11.1	0.054
	16.5	0.1
	16.5	0.23
	19.4	0.83
	19.4	0.83
	27.7	1.5
$NO^+ \rightarrow O^+$	23.6	0.12
$NO^+ \rightarrow N^+$	17.7	0.054
$N_2O^+ \rightarrow O^+$	12.5	0.49
$N_2^+ \rightarrow N^+$	18.7	0.056

References

1. R. L. Champion, L. D. Doverspike, and T. L. Bailey, J. Chem. Phys. 45, 4377 (1966).
2. D. K. Gibson and J. Los, Physica 35, 258 (1967).
3. D. K. Gibson, J. Los, and J. Schopman, Physica 40, 385 (1968).
4. M. Vogler and W. Seibt, Zeit. Phys. 210, 337 (1968).
5. R. Caudano and J. M. Defosse, J. Physics B 1, 813 (1968).
6. T. F. Moran and J. R. Roberts, J. Chem. Phys. 49, 3411 (1968).
7. T. F. Moran and D. C. Fullerton, Chem. Phys. Letters 2, 625 (1968).
8. T. F. Moran, F. C. Petty, and A. F. Hedrick, J. Chem. Phys. 51, 2112 (1969).
9. J. M. Peek, Phys. Rev. 134, A877 (1964); 140, A11 (1965).
10. J. M. Peek, T. A. Green, and W. H. Werhofen, Phys. Rev. 160, 117 (1967).
11. W. R. Gentry, E. A. Gislason, B. H. Mahan, and C. W. Tsao, J. Chem. Phys. 49, 3058 (1968).
12. B. R. Turner, J. A. Rutherford, and D. M. J. Compton, J. Chem. Phys. 48, 1602 (1968).
13. B. H. Mahan, Accounts of Chemical Research 1, 217 (1968).

Figure 1. Velocity vector diagrams for dissociative collisions. (a) Diagram appropriate for dissociation via the two-step process of excitation followed by fragment recoil. (b) Diagram appropriate for the impulse model of dissociation. Circles giving the loci of the velocity of the struck atom of the projectile immediately after collision with the target, and of the free atom after dissociation under the bonding force are shown.

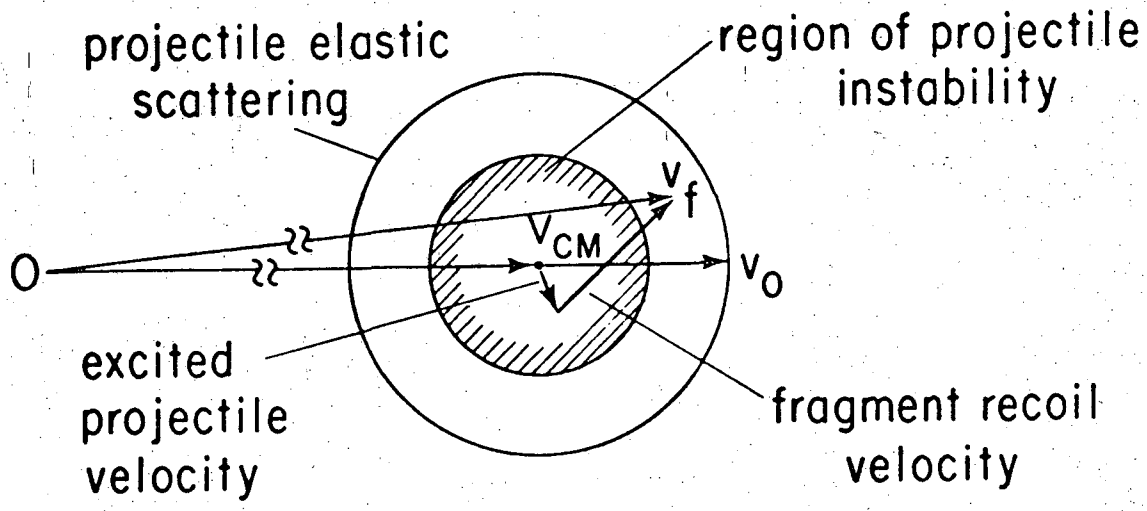

(a)

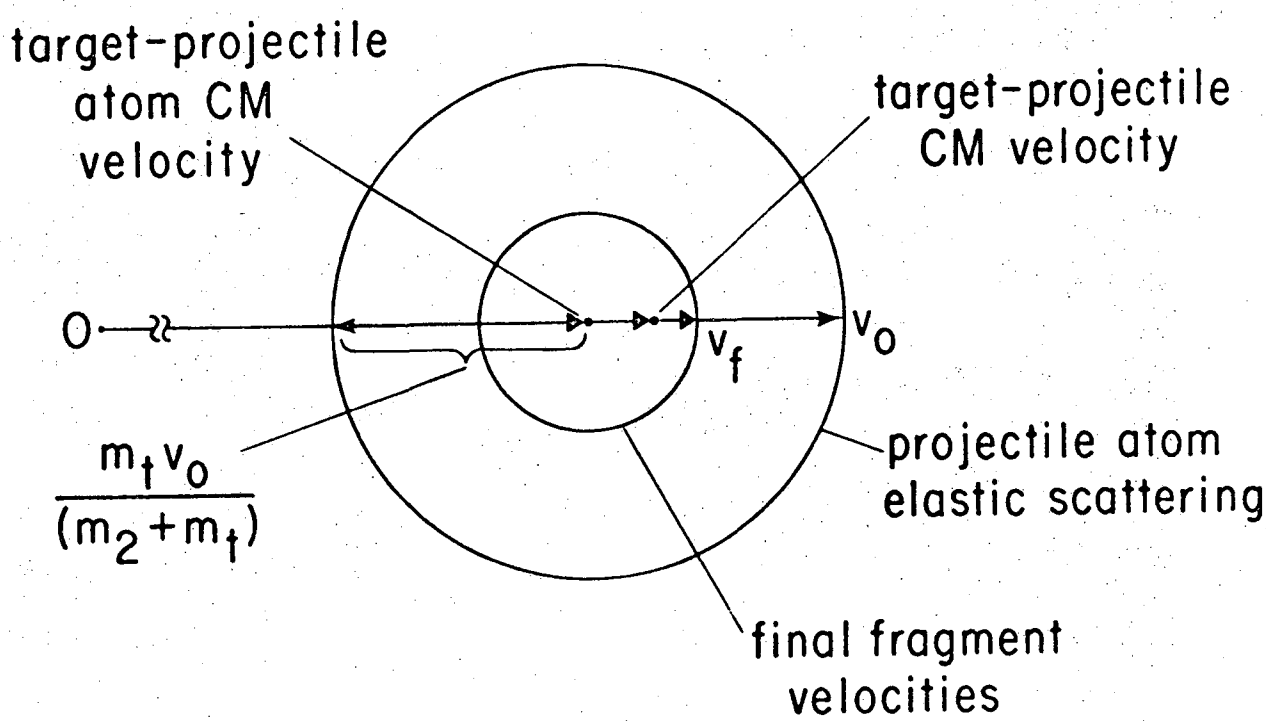

(b)

Figure 2. A contour map of the specific intensity of O^+ in the O_2^+-He center-of-mass coordinate system. The dashed contours are of less certain shape because of the very low counting rate in the peripheral regions of the map.

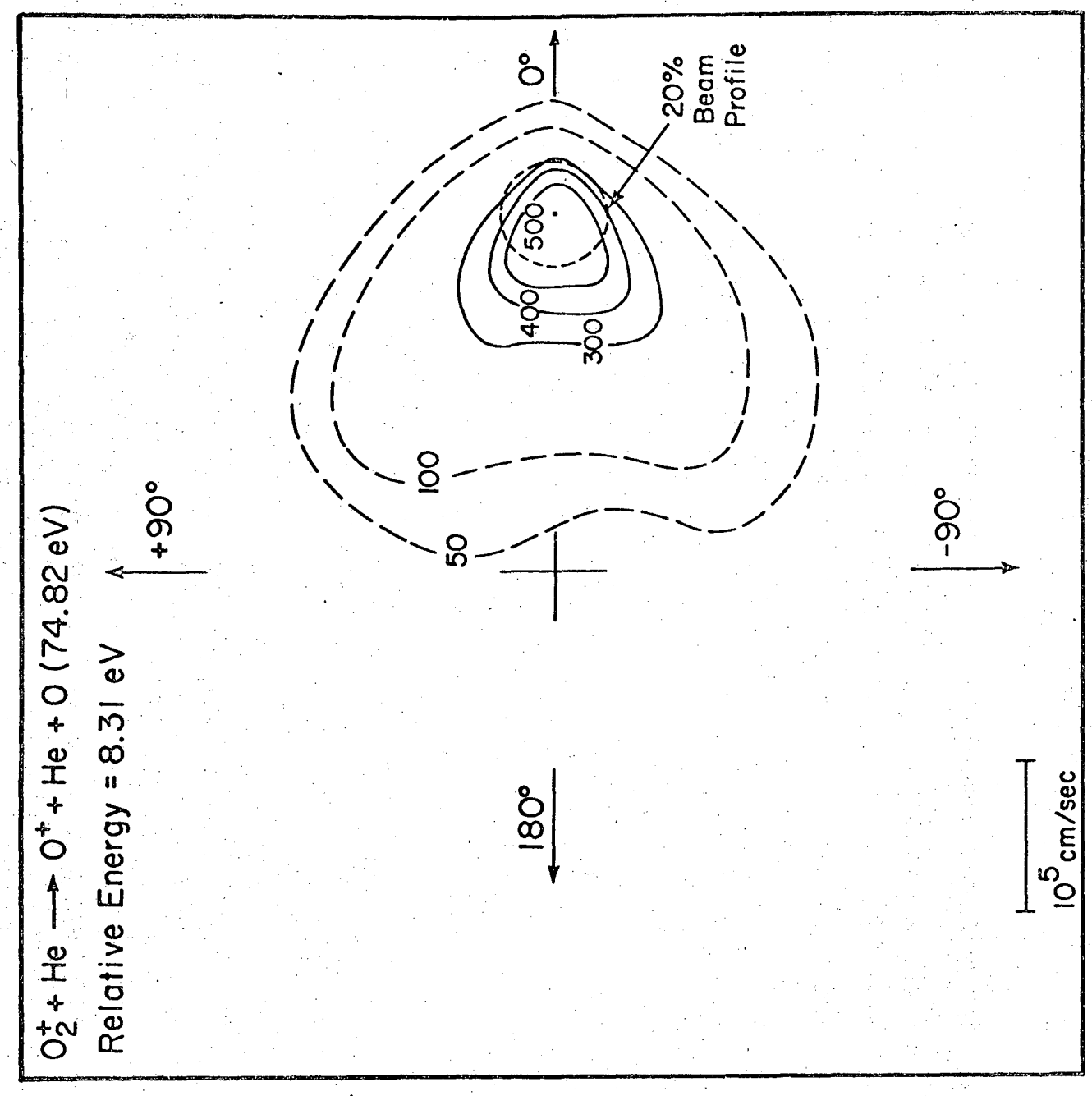

Figure 3. A contour map of the specific intensity of O^+ in the O_2^+-He center-of-mass coordinate system. The circle labelled Q = -25.3 eV represents the change in relative translational energy upon collision under the assumption that the neutral products He and O move from the collision site together, with no kinetic energy relative to each other.

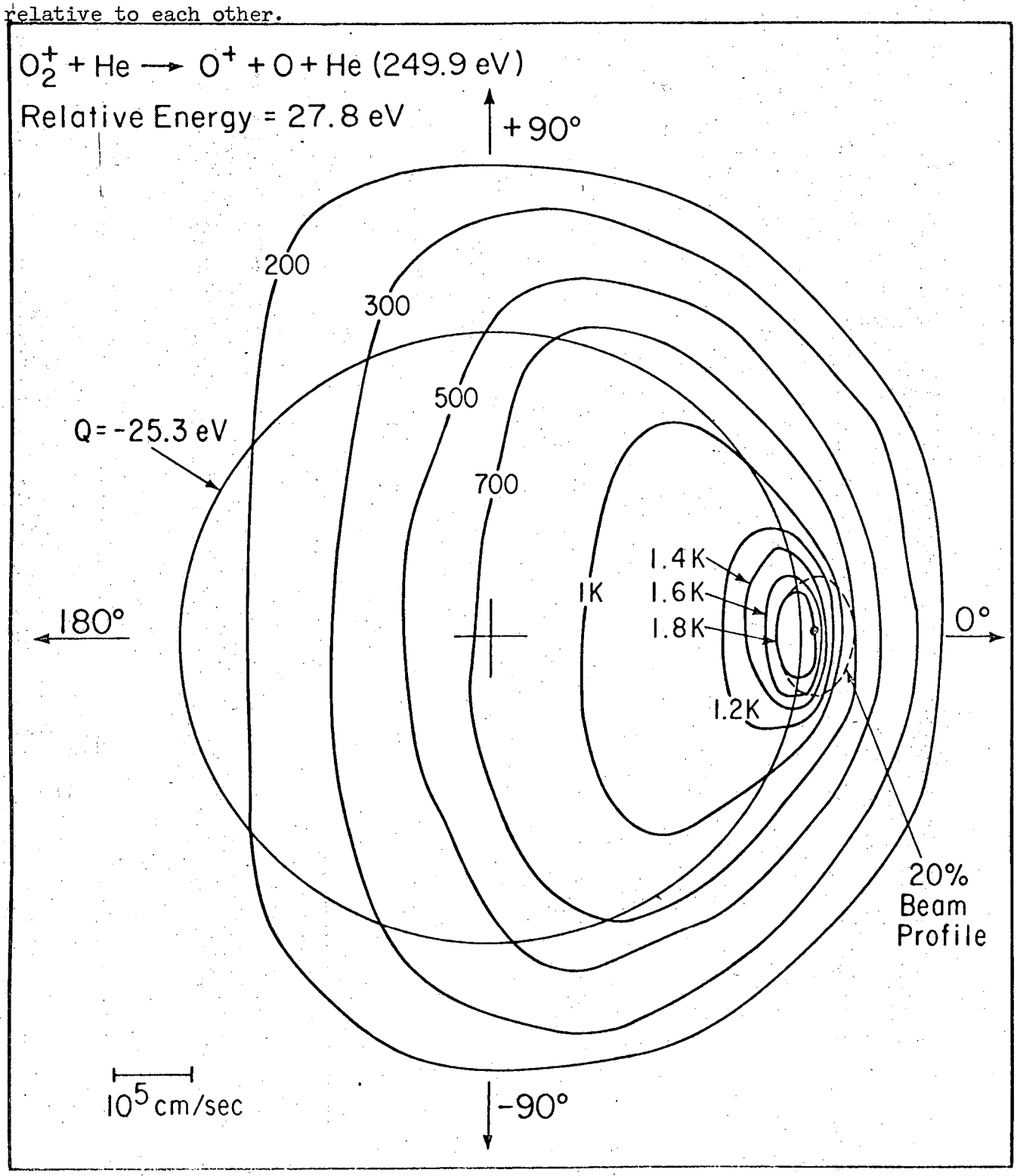

Figure 4. A contour map of the specific intensity of N^+ in the N_2^+-He center-of-mass coordinate system. For an explanation of the circle labelled Q = -16.8, see the caption of Figure 3.

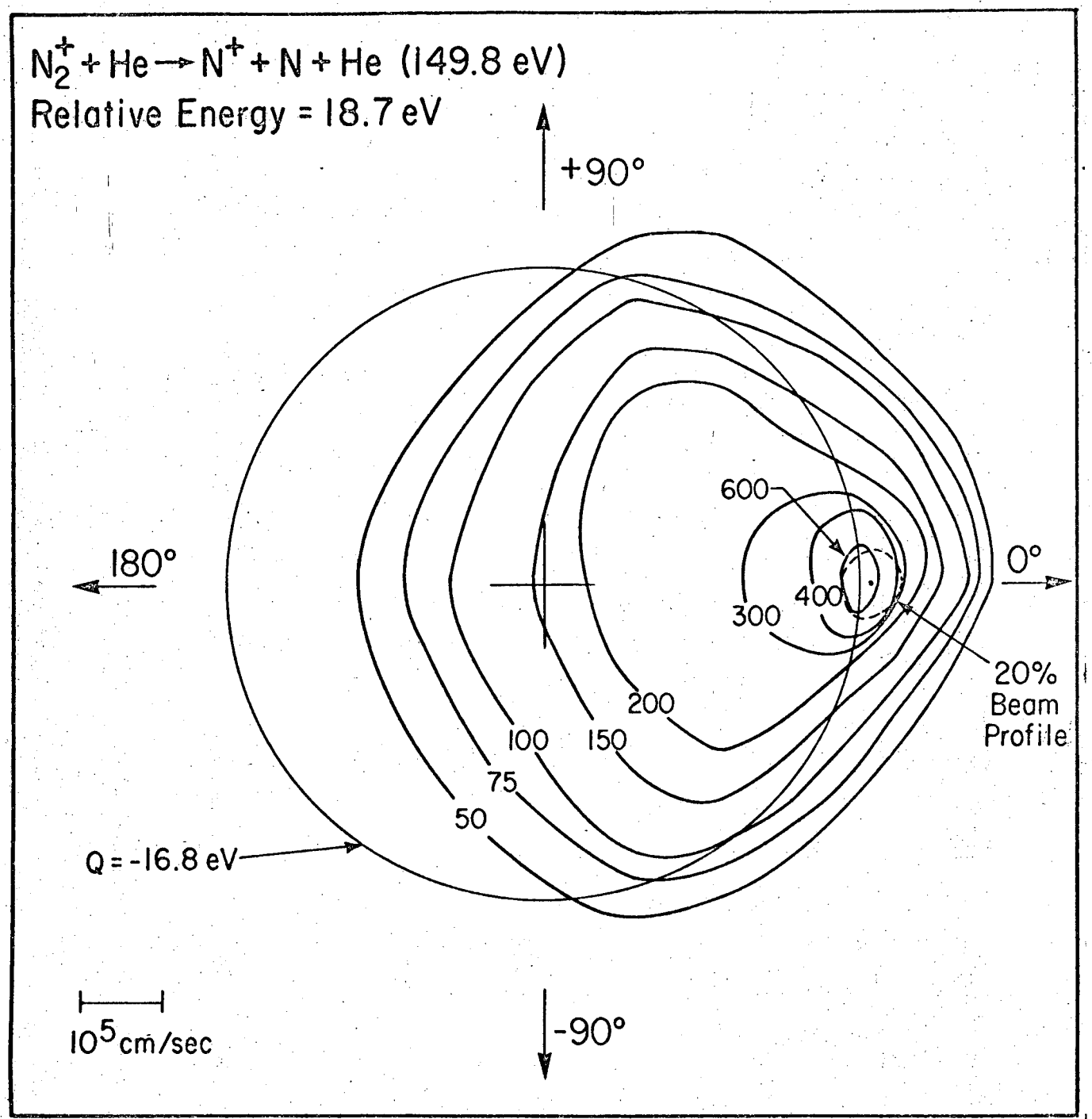

Figure 5. A contour map of the specific intensity of O^+ in the NO^+-He center-of-mass coordinate system. The convention adopted for the label on the circle is explained in the caption of Figure 3. The small crosses locate the peak intensity of the product and the beam.

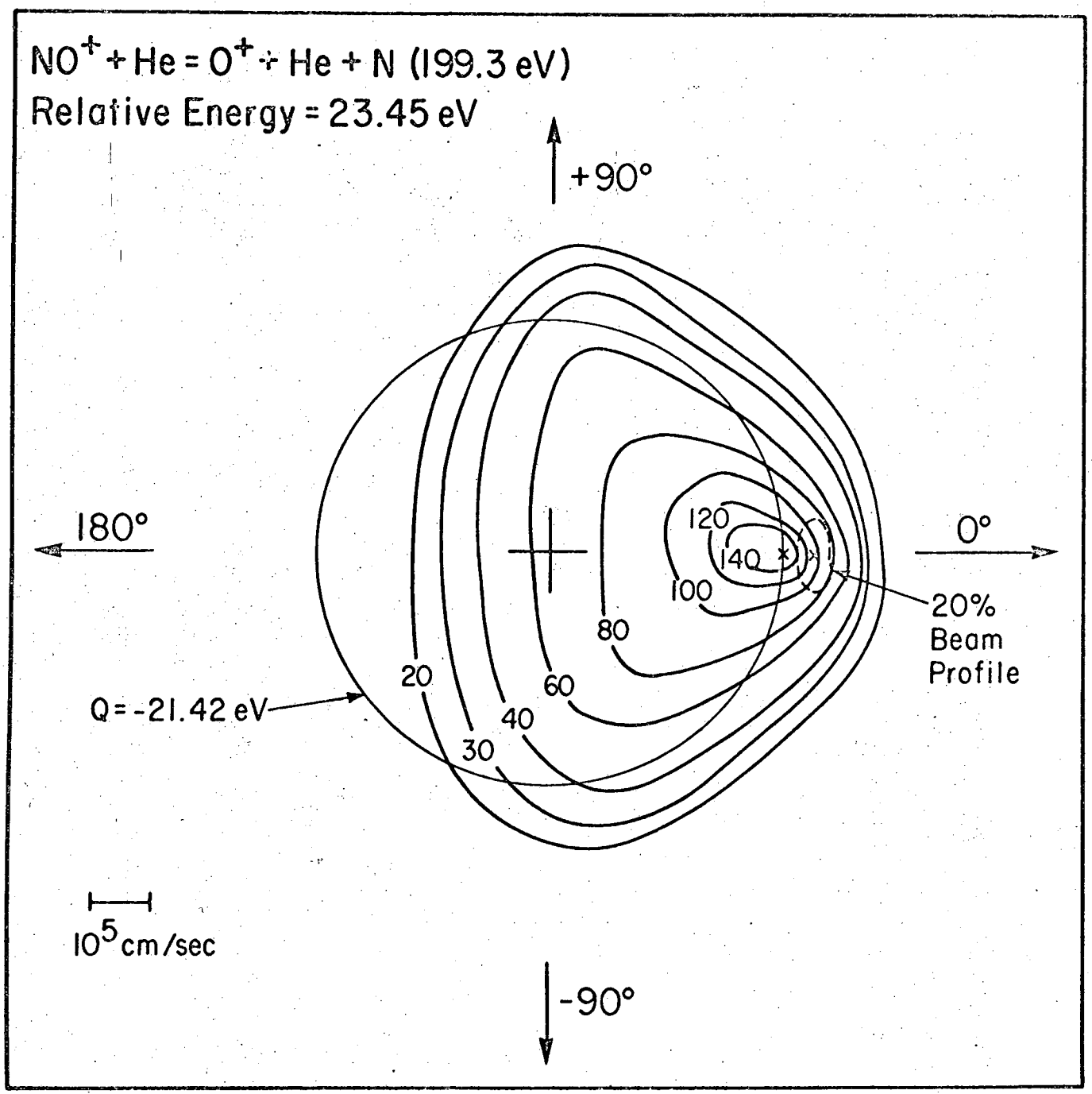

Figure 6. A contour map of the specific intensity of N^+ in the NO^+-He center-of-mass coordinate system. For an explanation of the circle labelled Q = -21.84 see the caption of Figure 3. Note that the intensity of N^+ shown in this map is slightly greater than that of O^+ obtained at the same energy, as shown in Figure 5.

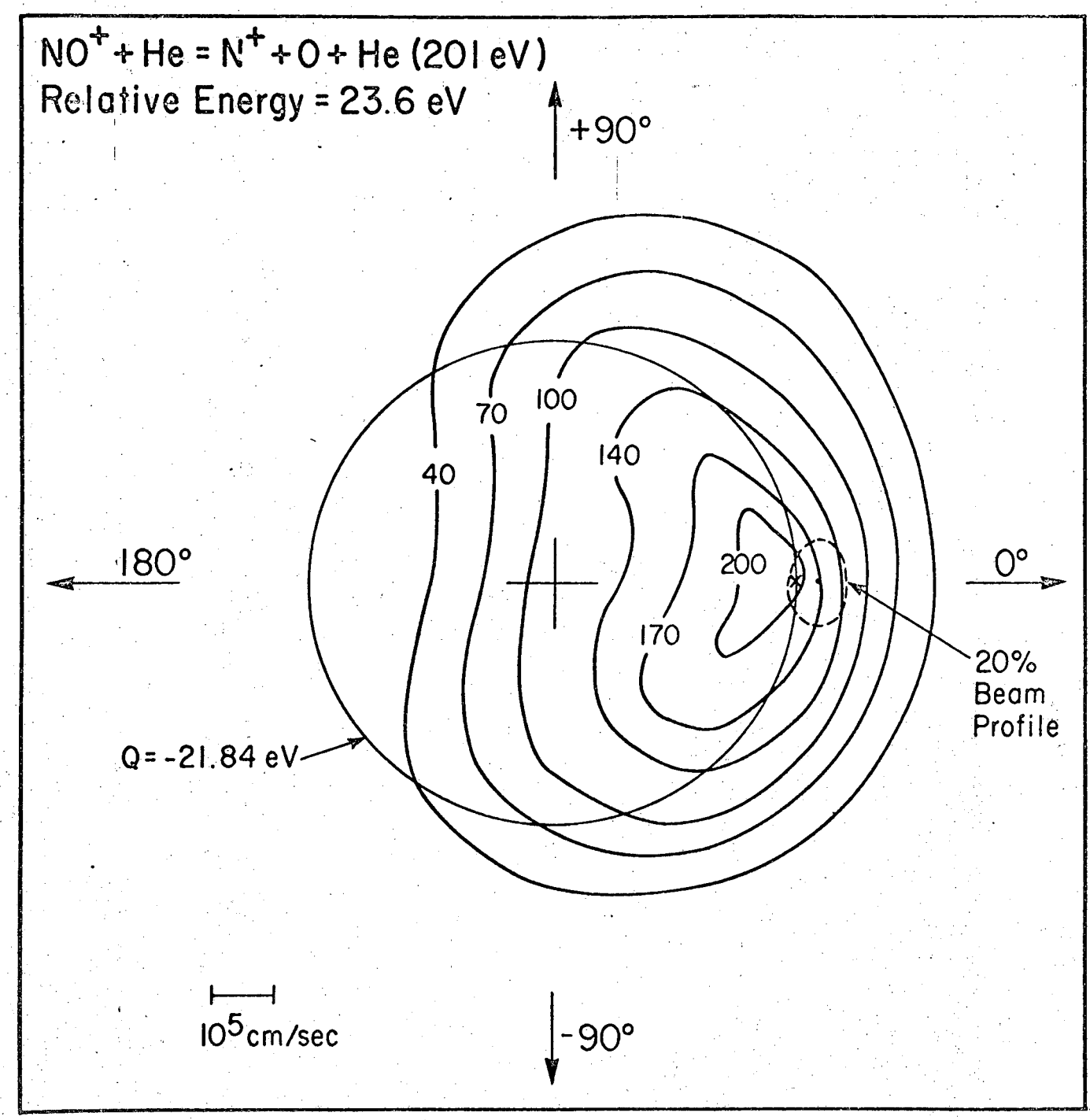

Figure 7. Profiles of the relative values of the specific intensity of N^+ and O^+ from NO^+-He collision, measured along the 0° line in the laboratory coordinate system.

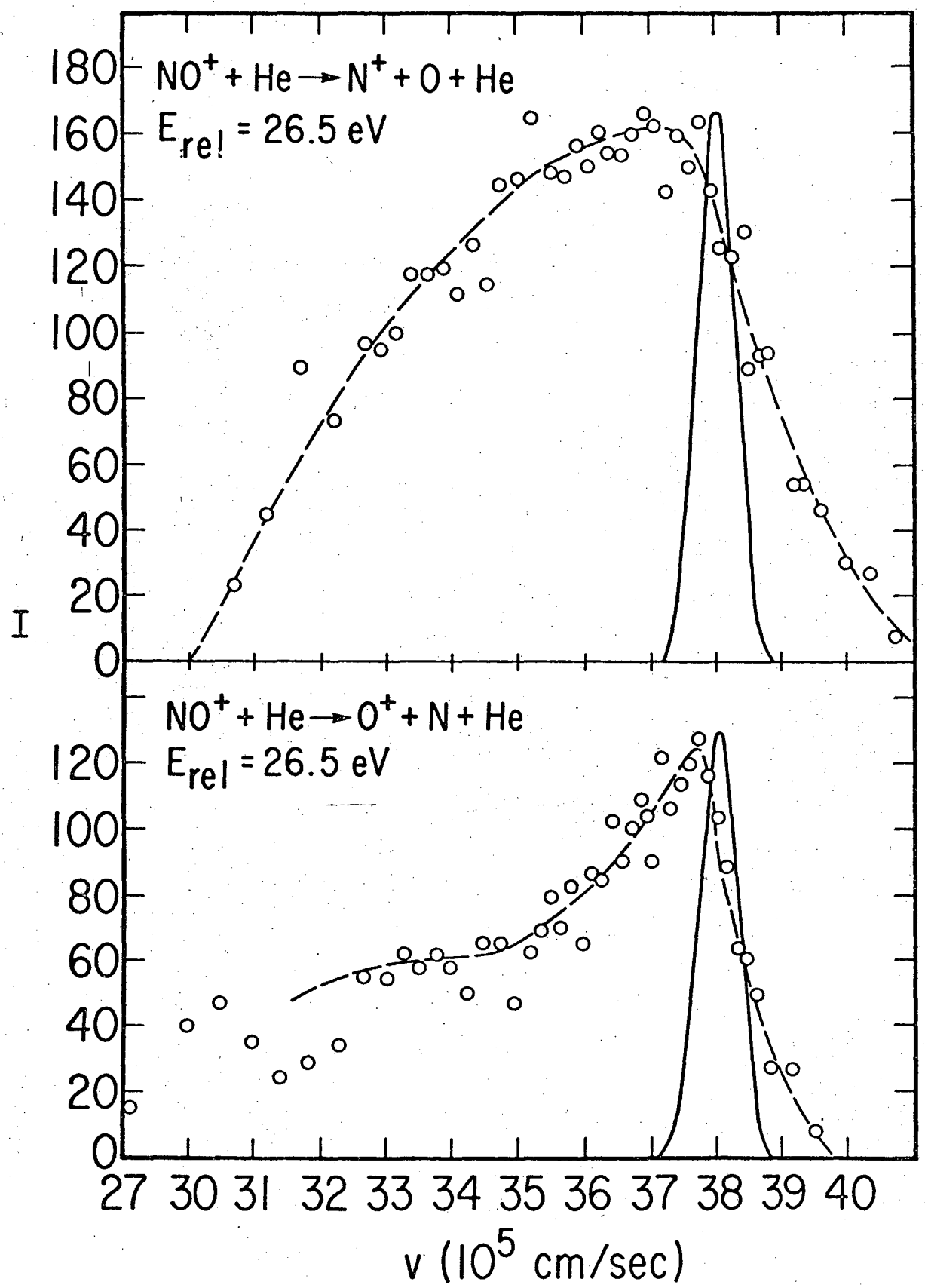

The velocities given are in the laboratory system.

Figure 8. A contour map of the specific intensity of O^+ from N_2O^+-He collisions. See Fig. 3 for an explanation of the circle labelled Q = -12.0 eV. Note that the intensity of O^+ from this system is greater than is observed for fragment ions from any of the other collision partners.

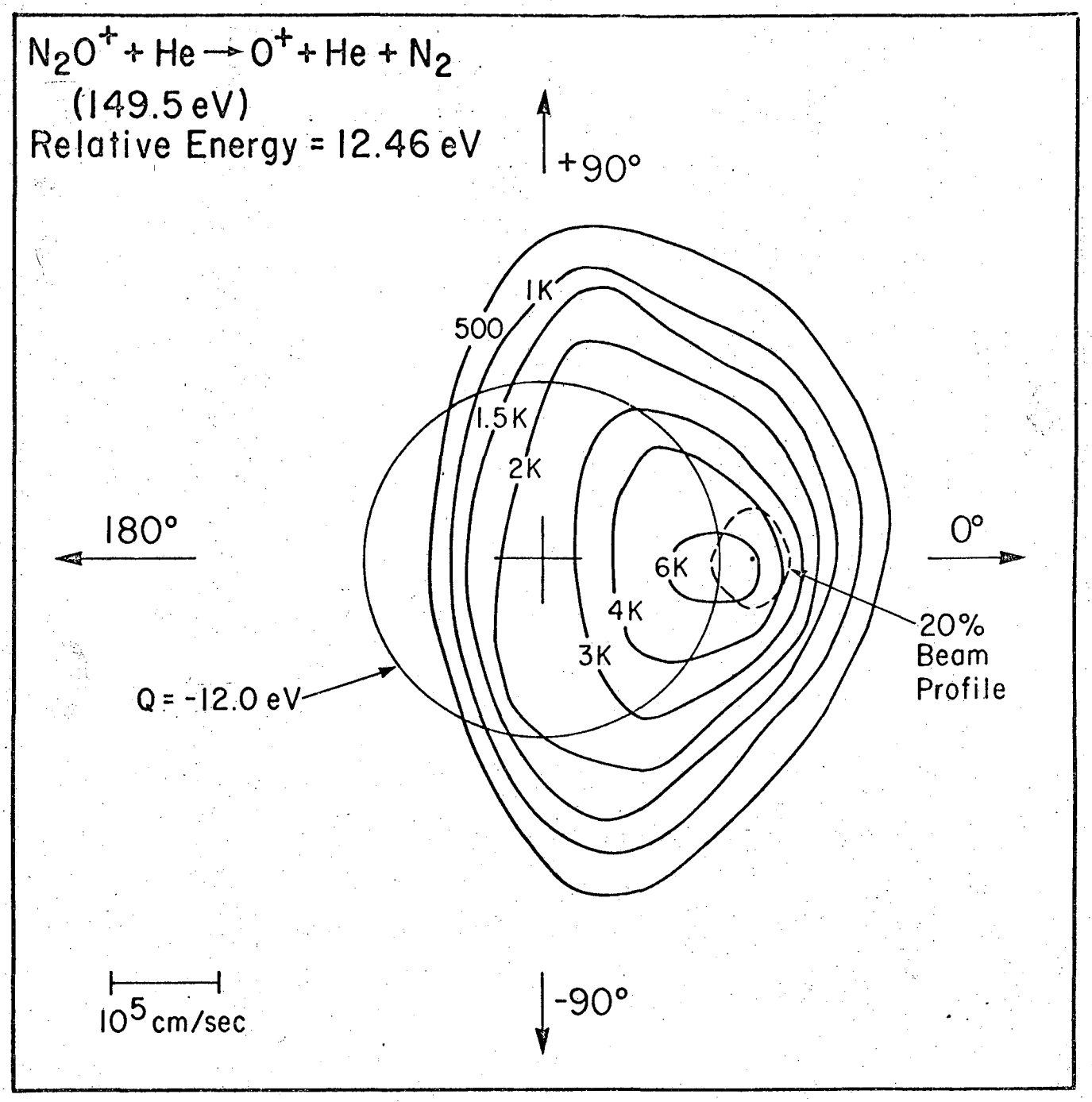

Figure 9. Profiles of the relative values of the specific intensities of O^+ and NO^+ from N_2O^+-He collisions given as functions of the laboratory velocity of the ions and at a scattering angle of zero degrees in the laboratory system. Note that the NO^+ intensity peaks at a velocity which is substantially smaller than the projectile velocity.

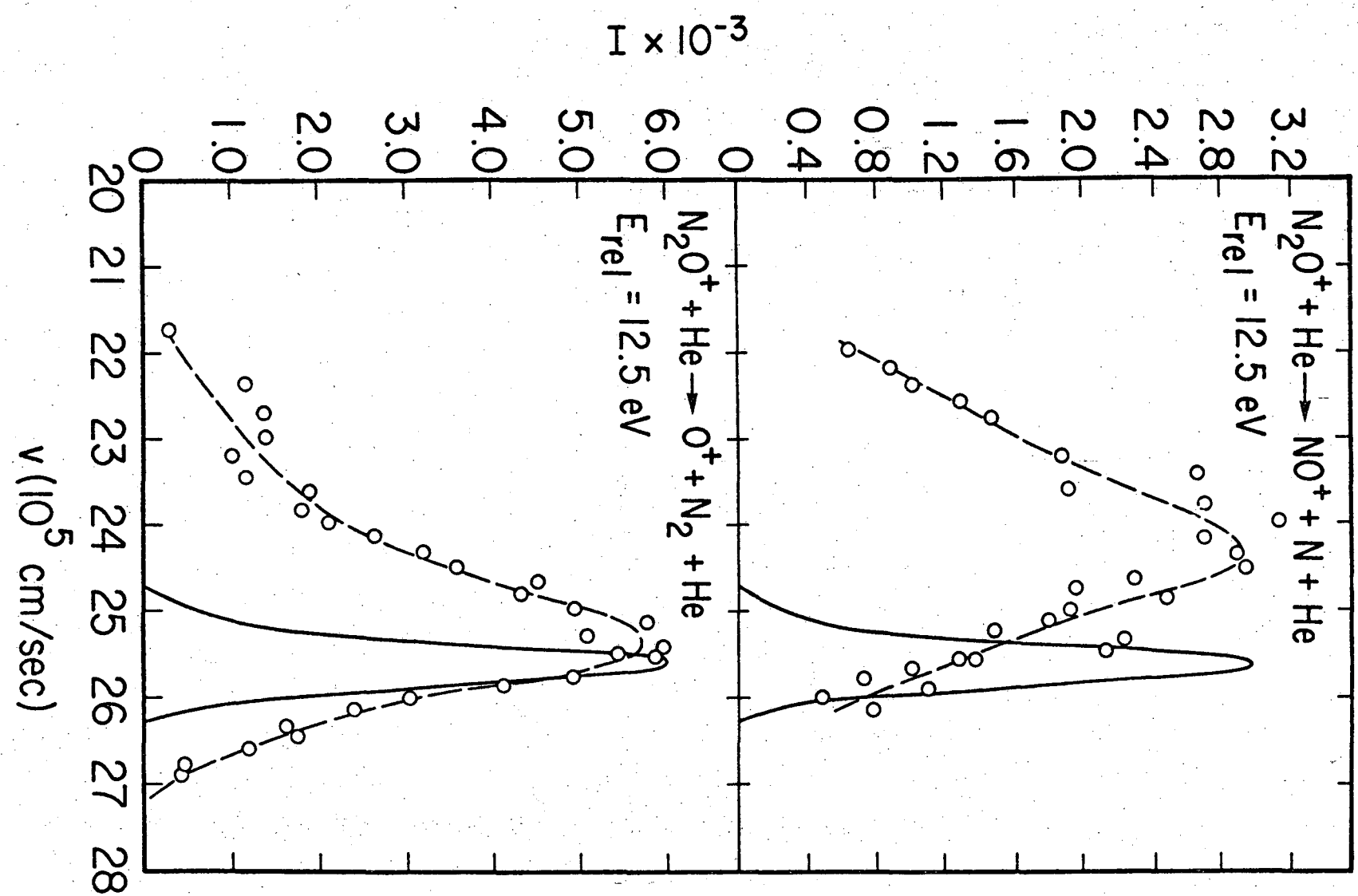

LEGAL NOTICE

This report was prepared as an account of Government sponsored work. Neither the United States, nor the Commission, nor any person acting on behalf of the Commission:

A. Makes any warranty or representation, expressed or implied, with respect to the accuracy, completeness, or usefulness of the information contained in this report, or that the use of any information, apparatus, method, or process disclosed in this report may not infringe privately owned rights; or

B. Assumes any liabilities with respect to the use of, or for damages resulting from the use of any information, apparatus, method, or process disclosed in this report.

As used in the above, "person acting on behalf of the Commission" includes any employee or contractor of the Commission, or employee of such contractor, to the extent that such employee or contractor of the Commission, or employee of such contractor prepares, disseminates, or provides access to, any information pursuant to his employment or contract with the Commission, or his employment with such contractor.

TECHNICAL INFORMATION DIVISION
LAWRENCE RADIATION LABORATORY
UNIVERSITY OF CALIFORNIA
BERKELEY, CALIFORNIA 94720