Submitted to Review of Scientific Instruments

UCRL-19247
Preprint

cy 2

RADIATION LABORATORY
AUG 12 1969
LIBRARY AND
DOCUMENTS SECTION

ULTRACENTRIFUGE DATA ACQUISITION FROM A CENTRAL CONTROL SYSTEM

Alfred A. Windsor, Lin C. Jensen, David A. Hoopes,
and Frank T. Lindgren

June 1969

AEC Contract No. W-7405-eng-48

TWO-WEEK LOAN COPY

This is a Library Circulating Copy which may be borrowed for two weeks. For a personal retention copy, call Tech. Info. Division, Ext. 5545

LAWRENCE RADIATION LABORATORY
UNIVERSITY of CALIFORNIA BERKELEY

UCRL-19247

cy 2

DISCLAIMER

This document was prepared as an account of work sponsored by the United States Government. While this document is believed to contain correct information, neither the United States Government nor any agency thereof, nor the Regents of the University of California, nor any of their employees, makes any warranty, express or implied, or assumes any legal responsibility for the accuracy, completeness, or usefulness of any information, apparatus, product, or process disclosed, or represents that its use would not infringe privately owned rights. Reference herein to any specific commercial product, process, or service by its trade name, trademark, manufacturer, or otherwise, does not necessarily constitute or imply its endorsement, recommendation, or favoring by the United States Government or any agency thereof, or the Regents of the University of California. The views and opinions of authors expressed herein do not necessarily state or reflect those of the United States Government or any agency thereof or the Regents of the University of California.

ULTRACENTRIFUGE DATA ACQUISITION FROM A CENTRAL CONTROL SYSTEM

Alfred A. Windsor, Lin C. Jensen, David A. Hoopes, and Frank T. Lindgren

Lawrence Radiation Laboratory
University of California
Berkeley, California 94720

June 1969

Abstract

Three analytic ultracentrifuges are controlled and useful operating measurements recorded by a central control and data acquisition system. Rotor speed, temperature, picture number of each schlieren photograph, and time of each measurement are recorded on cards by a printing summary punch machine. A Fortran IV computer program processes the data, yielding graphs of rotor speed and temperature versus time and the accumulated value of $\omega_{FS}^{-2}\int\omega^2(t)dt$ for the mean time of each schlieren photograph. These data permitting error detection as well as more accurate schlieren analysis of lipoprotein distributions and flotation rates.

Introduction

In an earlier study[1] automatic acceleration to full speed was provided for an analytic ultracentrifuge using a modified electronic speed control system. However, during an ultracentrifuge run it is useful and frequently necessary to obtain accurate information about the acceleration phase, full-speed stability, rotor temperature, and exact time when schlieren photographs are taken. The present automatic system is designed to provide all such data from one or more analytic ultracentrifuges.

When data are collected from several devices and channeled into one recorder, a method of coding and collating is required. We have chosen to use a master clock to synchronize the start of each machine and to code the data by the time at which measurements are taken. A time sequencer strobes the measurements by switching from machine to machine in a one-two-three sequence. This data collecting system is available for any one or all three ultracentrifuges, which may run on totally independent operation schedules.[2]

A digital clock (Parabam Model DA 24, Hawthorne, California) reading hours, minutes, and seconds on a 24-hour basis controls the timing. An interface coupler (Dymec Model 2526, Hewlett-Packard, Palo Alto, California) operates with an IBM 526 summary punch machine to store and record 12 input characters. The IBM patchboard determines the card format containing the time, machine number, rpm, and rotor temperature. Each card also has the date punched from a master card.[3]

Figure 1 shows the progression of data from the centrifuges to the summary punch machine. Mercury reed relays select signals from

gear tooth counters (Electro Model 3010-A, Chicago, Illinois) for rotor speed information and from radiometers for rotor temperature information. A gear attached to the drive motor has teeth which are counted to give impulses proportional to rotor speed. The radiometer (Beckman Instruments, Palo Alto, California) is the total-radiation heat-balance type used in the Model L2-65B preparative ultracentrifuge. A 0.5-in.-diameter aluminum disk receives the energy, and thermocouple wires support and measure the temperature of the disk. The outer structure defines the area from which the receiving element or disk receives the infrared radiation. This structure (or shield) also has a thermocouple for comparison with the disk thermocouple; a thermoelectric module heats or cools the shield to the same temperature as the disk in a closed loop system.[4]

Reed relays select radiometer outputs to channel the corresponding ultracentrifuge temperature analog voltage to a digital voltmeter (Model 3460B, Hewlett-Packard, Palo Alto, California). The bottom of the analytic rotor is recessed 40 thousandths and painted flat black to optimize radiation exchange between the rotor and the radiometer; the latter is offset 0.75 in. from the axis of the rotor and spaced 0.25 in. from the rotor bottom. Five digits of binary coded decimal (BCD) temperature information are available at the digital voltmeter output. A counter (Model 5246L, Hewlett-Packard, Palo Alto, California) with a preset unit converts rotor speed pulses to BCD revolutions per minute. Six digits are available at the output, and reed relays select between speed and temperature digital output for the interface coupler.

The sequencer chassis converts timing signals from the master clock into instructions to the system. All ultracentrifuges are scanned; if one is not in operation the numbers corresponding to the static condition are recorded by the printing summary punch machine. Each time a picture is taken an indicator is punched just before the temperature as shown in the card format (Fig. 1). Machines are represented by the digits 1, 2, and 4. If pictures are taken by one or by two or three machines simultaneously, it is still possible to know which machines took pictures because the digit punched is the sum and the computer program decodes this number.

Each ultracentrifuge is designed to operate wholly independently of the system (if desired) when the connector leading to the central system is replaced by an appropriate jumper plug. A timed cycle of acceleration and photography is determined by a program card in each centrifuge, and the cycle is initiated by a push button on each centrifuge whether controlled locally or by the central system. The Beckman commutator timer has been replaced by an integrated circuit, giving flexibility of 99 possible picture times. Pictures may be taken at any 2-min interval over a period of 200 min. Figure 2 shows the present program card which consists of three integrated circuit NAND gates providing permissive gates for 10 pictures followed by an end-of-run gate.

Each machine is started at a coded time, with machine Number 1 beginning 10 or 40 sec after the minute, Number 2 at 20 or 50 sec after the minute, and Machine 3 at 0 and 30 sec after the minute. After starting, temperature and speed are measured every 0.5 min for the first 5 min during acceleration and every 2 min during the run. Detailed measurements of rotor speed are required during 5 min of acceleration to full

speed, because within this period two schlieren pictures are taken.

A Fortran IV computer program processes the punched data, yielding graphs of rotor speed and temperature as functions of time, and giving the cumulative value of $\omega_{FS}^{-2}\int\omega^2(t)dt$ for the mean time of each schlieren photograph.

A typical computer evaluation of a successful ultracentrifugal run is shown in Fig. 3. Had there been any failure, an error message or messages would describe the difficulty. An additional feature of the computer analysis is shown in Fig. 4. Here a cathode ray tube (CRT) plot gives a visual profile of acceleration and rotor temperature as well as showing the times at which schlieren photographs were taken.

Discussion

The automatic control and data-acquisition system as described here is a useful application of computer techniques to simple electromechanical devices. Data obtained directly in the form of IBM punched cards allow convenient and direct submission of data for computer analysis. Such data permit quick computer evaluation of each day's runs, machine performance, and error-detection capability. Where needed, the equivalent up-to-speed centrifugation during the acceleration phase of each run is available with great accuracy. Such information is essential in very-low-density lipoprotein analysis where significant migration of molecules occurs during the acceleration phase of the run. Also, the system permits great flexibility in the actual ultracentrifugal run itself, for example, nonlinear acceleration or a run consisting entirely of programed acceleration. The latter capability may be useful in minimizing the effects of adiabatic temperature changes during acceleration to full

speed. Finally, such a system should increase the accuracy of sedimentation and flotation rates, particularly at low rotor speeds.

Acknowledgments

We thank Frank T. Upham, Electronics Department, for his valuable assistance and advice. This work was supported in part by Research Grant 5-R01-HE-01882-15 from the National Heart Institute, U. S. Public Health Service, Maryland, and in part by the U. S. Atomic Energy Commission.

References

1. A. A. Windsor, T. H. Rich, R. E. Doyle, and F. T. Lindgren, Rev. Sci. Instr. 38, 949 (1967).
2. J. V. Maloney, Jr., Computers: The Physical Sciences and Medicine, A. F. I. P. S. Fall Conf. Vol. 27, Part 2 (1965).
3. Recording Digital Measurements, Data-Acquisition System with Clock, Hewlett-Packard Application Note 113, pp. 15-16 (1968).
4. R. K. Richards, Digital Computer Components and Circuits (D. Van Nostrand Co., Inc., Princeton, N. J., 1957), pp. 459-500.

Figure Captions

Fig. 1. Overall block diagram.

Fig. 2. Circuit diagram of program card.

Fig. 3. Computer evaluation of a successful ultracentrifugal run.

Fig. 4. (CRT) plot of acceleration and rotor temp. A photograph is marked by the small square.

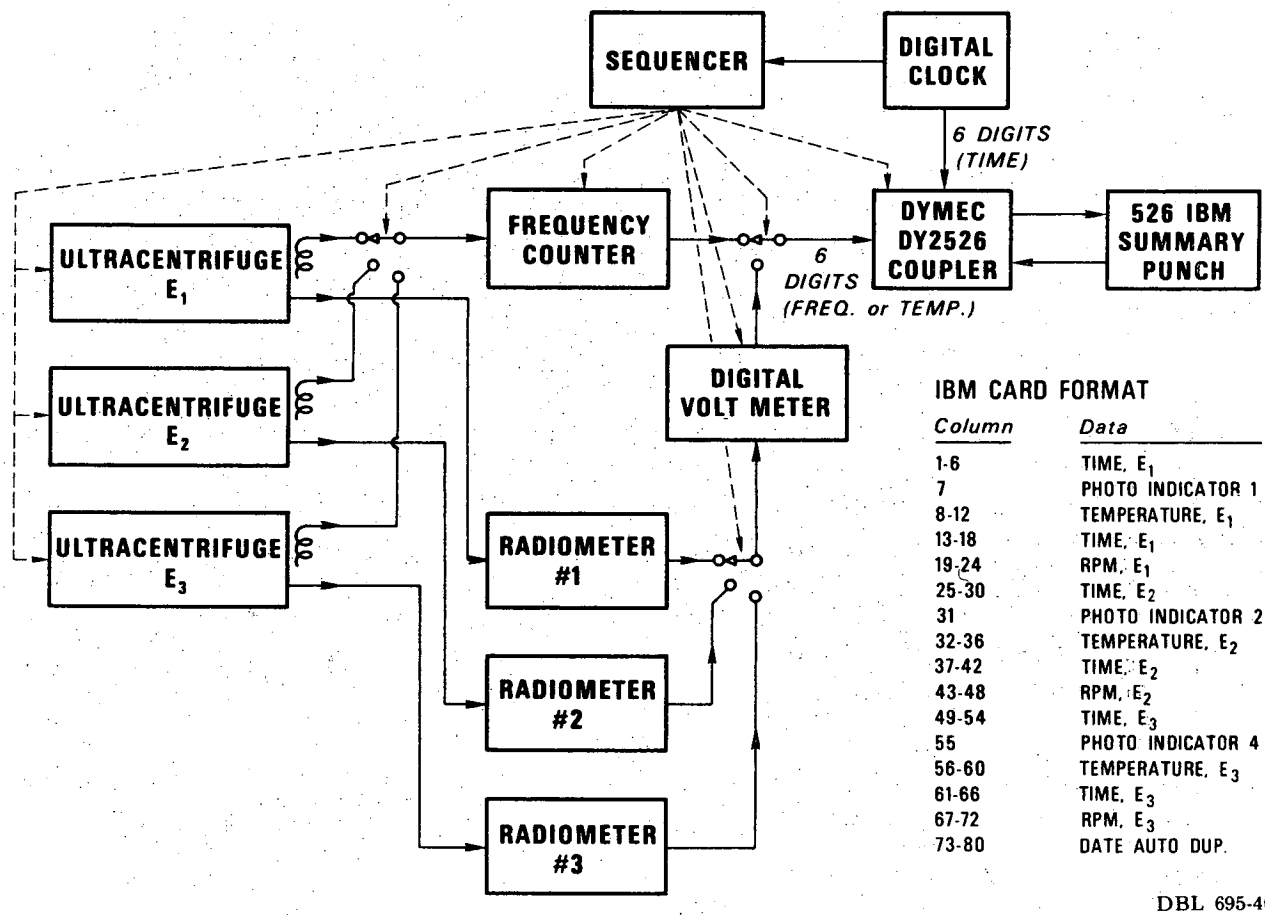

IBM CARD FORMAT

Column	*Data*
1-6	TIME, E_1
7	PHOTO INDICATOR 1
8-12	TEMPERATURE, E_1
13-18	TIME, E_1
19-24	RPM, E_1
25-30	TIME, E_2
31	PHOTO INDICATOR 2
32-36	TEMPERATURE, E_2
37-42	TIME, E_2
43-48	RPM, E_2
49-54	TIME, E_3
55	PHOTO INDICATOR 4
56-60	TEMPERATURE, E_3
61-66	TIME, E_3
67-72	RPM, E_3
73-80	DATE AUTO DUP.

DBL 695-4698

Fig. 1

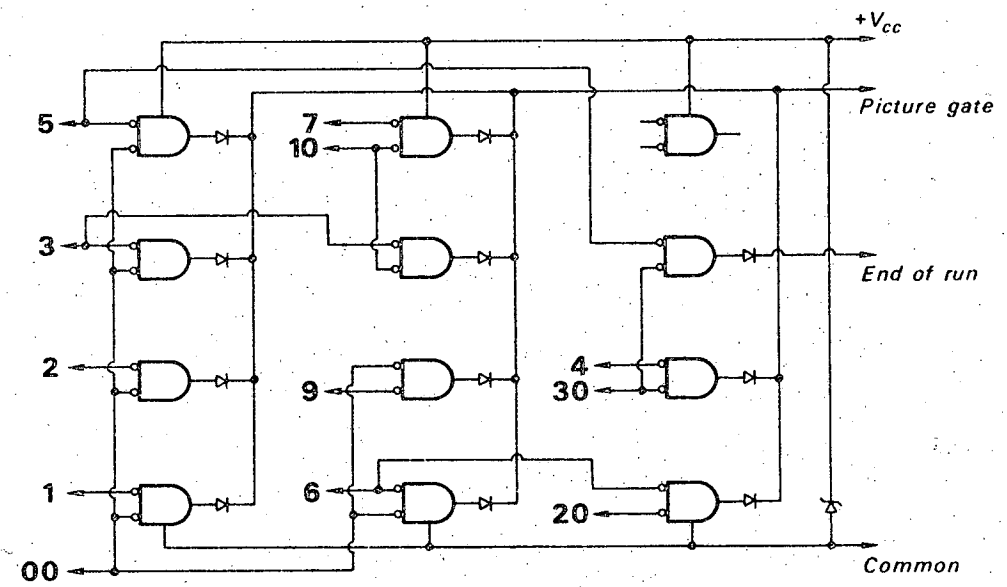

Fig. 2

DBL 695-4699

MACHINE 3, STARTED AT 14H37M 0S 02/11/69

FRAME	CLOCK	TIME	RPM	TEMP	EQV. UTS
1	14H40M30S	-2.00	34731	25.41	.4951
2	14H42M30S	0.	52687	25.00	1.9670
3	14H44M30S	2.00	52639	24.91	3.9674
4	14H48M30S	6.00	52639	24.91	7.9673
5	14H50M30S	8.00	52640	24.93	9.9672
6	14H56M30S	14.00	52640	24.95	15.9671
7	15H 4M30S	22.00	52639	24.99	23.9667
8	15H12M30S	30.00	52639	25.02	31.9664
9	15H30M30S	48.00	52639	25.06	49.9655
10	15H46M30S	64.00	52639	25.13	65.9648

UP-TO-SPEED RPM = 52638.9 (+- .63) N = 32

M-C TEMPERATURE AVERAGES..
D-RUN, FRAMES 5-10 25.04
G-RUN, FRAMES 2- 7 24.95

Fig. 3

DBL 695-4700

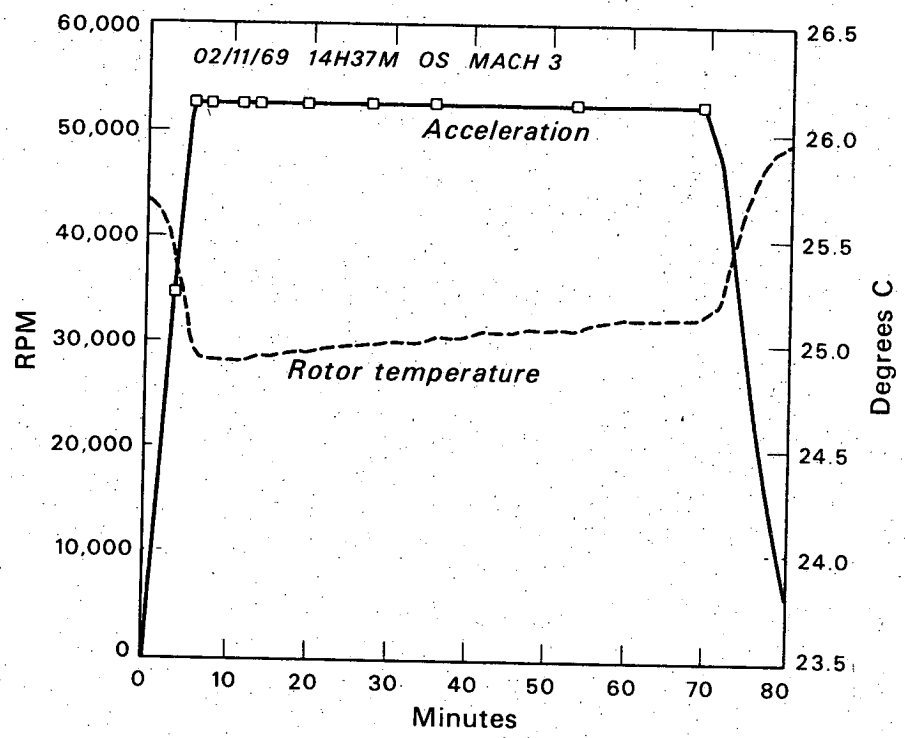

Fig. 4 DBL 695-4701

LEGAL NOTICE

This report was prepared as an account of Government sponsored work. Neither the United States, nor the Commission, nor any person acting on behalf of the Commission:

A. Makes any warranty or representation, expressed or implied, with respect to the accuracy, completeness, or usefulness of the information contained in this report, or that the use of any information, apparatus, method, or process disclosed in this report may not infringe privately owned rights; or

B. Assumes any liabilities with respect to the use of, or for damages resulting from the use of any information, apparatus, method, or process disclosed in this report.

As used in the above, "person acting on behalf of the Commission" includes any employee or contractor of the Commission, or employee of such contractor, to the extent that such employee or contractor of the Commission, or employee of such contractor prepares, disseminates, or provides access to, any information pursuant to his employment or contract with the Commission, or his employment with such contractor.

TECHNICAL INFORMATION DIVISION
LAWRENCE RADIATION LABORATORY
UNIVERSITY OF CALIFORNIA
BERKELEY, CALIFORNIA 94720