Submitted to Instrument Society of America

UCRL-19248
Preprint

cy. 2

RECEIVED
LAWRENCE
RADIATION LABORATORY

OCT 16 1969

LIBRARY AND
DOCUMENTS SECTION

A 2-MHz 8-kV PULSER FOR HIGH-SPEED STROBOSCOPIC PHOTOGRAPHY

C. C. Lo

August 1969

AEC Contract No. W-7405-eng-48

TWO-WEEK LOAN COPY

This is a Library Circulating Copy which may be borrowed for two weeks. For a personal retention copy, call Tech. Info. Division, Ext. 5545

LAWRENCE RADIATION LABORATORY
UNIVERSITY of CALIFORNIA BERKELEY

UCRL-19248

cy. 2

DISCLAIMER

This document was prepared as an account of work sponsored by the United States Government. While this document is believed to contain correct information, neither the United States Government nor any agency thereof, nor the Regents of the University of California, nor any of their employees, makes any warranty, express or implied, or assumes any legal responsibility for the accuracy, completeness, or usefulness of any information, apparatus, product, or process disclosed, or represents that its use would not infringe privately owned rights. Reference herein to any specific commercial product, process, or service by its trade name, trademark, manufacturer, or otherwise, does not necessarily constitute or imply its endorsement, recommendation, or favoring by the United States Government or any agency thereof, or the Regents of the University of California. The views and opinions of authors expressed herein do not necessarily state or reflect those of the United States Government or any agency thereof or the Regents of the University of California.

A 2-MHz 8-kV PULSER FOR HIGH-SPEED STROBOSCOPIC PHOTOGRAPHY

C. C. Lo

Lawrence Radiation Laboratory
University of California
Berkeley, California

August 1969

Abstract

A pulse generator has been developed to operate at a maximum burst rate of 2×10^6 pulses per second driving a Pockels cell which modulates a laser for high speed photographing purposes. With this pulser, a maximum of 250 frames can be taken in one burst, with consecutive frames spaced at a minimum of 500×10^{-9} sec apart. The leading edge of the voltage waveform across the Pockels cell is approximately 13×10^{-9} sec.

Introduction

In the experimental setup, a pulsed solid-state laser is used to produce a coherent light pulse. A biased Pockels cell is inserted into the laser cavity (see Fig. 1) to spoil the Q of the cavity[1] and hence stop the laser's normal operation. When the bias voltage is removed from the cell, the laser starts to operate again, producing a beam of coherent light for as long as the appropriate bias voltage is absent from the cell; the light pulse is directed to the test area by proper lens and reflectors. Through a schlieren system,[1] the events at the test area are recorded on films.

General Description

Figure 2 is a block diagram of the complete pulse generator. Figures 3, 4, and 5 are schematics of the pulser. Table I is a tabulation of all chokes and transformers used in this pulser.

With no external trigger input to the gate delay circuit, the pulser is off; the Pockels cell has a 7.5-kV positive bias across it. The shaper feeds a continuous pulse train to the gating circuit. However, the pulse train is gated on only after a command pulse is fed to the gate delay circuit. The frequency of the pulse train is controlled by either an external pulse generator or a sine-wave generator through the built-in pulse shaper. The shaper accepts a sine-wave signal, which could be supplied from a crystal-controlled oscillator to provide accurate timing, and converts it into a train of pulses with the rise time and pulse width independent of the input signal frequency. After a time delay of

approximately 500 μsec, a gating signal of approximately 100 μsec is fed to the gating circuit. Hence, in one burst, 200 output pulses are available. The gated pulse train is then used to trigger the two avalanche transistors that drive the planar triode #ML7815. Through a step-down inverting transformer, the driving pulses are fed to the final stage by a 125-ohm coaxial cable which is terminated in 125 ohms at the grid of the final tube. The Pockels cell is connected in parallel with the anode of the final planar triode. A voltage of 7.5 kV is normally applied across the triode as the bias voltage for the cell.

Shaper Stage

The operating frequency range of the shaper is from 200 Hz to 4 MHz; the amplitude of the sine-wave input signal required is from 5 to 7 V peak. Q_1 and Q_2 convert the sine-wave signal into a square wave. Q_3 amplifies the square wave before it is differentiated by C_3 and R_9. Q_4 serves as an emitter-follower buffer. The output pulse of this stage has a rise time of about 15 nsec and a base width of 100 nsec. The rise time stays essentially the same for an input frequency range from 200 Hz to 4 MHz, and the output pulse amplitude is 5 V.

Timing Circuit

The time delay is obtained by Q_5 and Q_6, which form a one-shot multivibrator, the pulse width of which is adjusted by R_{20} through a range of 100 μsec to 1 msec. Q_7 amplifies the output pulse from the multivibrator. C_8 and R_{28} differentiate the amplified pulse; D_6 clips

off the negative-going spike from the differentiated signal. Q_8 and Q_9 form another one-shot multivibrator, which controls the width of the gate. The gate width is adjustable from 5 to 500 μsec by R_{31} and S_1. Provision is made for monitoring both the gate delay and the gate width.

The Gate

Q_{10}, Q_{11}, and Q_{12} form the gate. Q_{10} is normally off, hence Q_{11} is normally on, acting as the low leg of a voltage divider with R_{12}. D_3 further blocks the low-level output signal voltage of the divider. Q_{12} serves as a buffer. R_{13} feeds a negative bias to the base of Q_{12}, helping it to recover faster, after each time it conducts. An attenuation factor of greater than 50 db is achieved with this circuit. The output pulse has a rise time of about 15 nsec, and an amplitude of 2 V that is used to trigger the avalanche transistors in the driver stage. The input signal to the gate can also be fed from an external pulse generator as long as the input pulse has a rise time of less than 20 nsec and the base width is between 30 and 100 nsec.

Driver Stage

Q_{13} and Q_{14} are specially selected transistors which operate in the avalanche mode.[2] The type used in this pulser is Motorola 2N2222. The time delay of these transistors is less than 2 nsec and the rise time is less than 1 nsec. Since Q_{13} and Q_{14} are connected in series, an isolation transformer is used at the intput. The bias current

of Q_{13} and Q_{14} is approximately 200 μA. The emitter of Q_{13} is connected directly to the gird of V_1. C_{15} normally is charged up to +120 V, when Q_{13} and Q_{14} turn on, C_{15} is switched right across the grid of V_1, turning it on. T_2 transforms the negative-going pulse to a positive-going pulse. At the same time, it steps down the 2500-V pulse to a 450-V pulse. A RG 213U cable is used to send the 450-V pulse to the final stage. The rise time of the output pulse is 5 nsec, with a half-maximum width of approximately 25 nsec.

Final Stage

The final stage of the pulser is a separate unit from the main chassis. It is designed to mount in the laser cavity (Figure 6). The tube used in the final stage is a planar triode, Machlett type ML8538. A negative 140 V is applied to the grid of the ML8538 to bias it off normally. This bias voltage was chosen after measurement of the leakage current against the bias voltage of 5 tubes. Because of the high bias voltage required by the Pockels cell and the requirement of a fast-fall switching pulse, the mounting of the switching tube right next to the Pockels cell ofers a reasonable solution to a low-inductance, high- operating-frequency driver for the cell. A 1.4-ohm current shunt is connected in series with the cell; this serves as an output monitor. The fall time of the voltage pulse is approximately 13 nsec, and the half-maximum width of the voltage pulse is approximately 50 nsec. Figure 7 shows the voltage waveform across the Pockels cell.

Power Supplies

The line voltage is rectified directly off the line. A 20-ohm resistor is connected in series with the full-wave bridge rectifier to reduce the surge current to 2 A. A triac is turned on approximately 100 msec after the main switch is activated, bypassing the current-limiting resistor. Because of the numerous voltage needed by various parts of the circuit, a 90-kHz chopper[3] is used. This approach reduces the size of the power supply section to a minimum. A 90-kHz oscillator is used to drive two transistors, which chop up a 100-V dc supply provided by the dc regulator. Through the chopper transformer, T_4, the 200-V peak-to-peak rectangular wave is stepped up to 800 V peak to peak for driving the Cockcroft-Walton voltage multiplier.[3] Other voltages are obtained similarly. A one-turn winding on the chopper transformer supplies the driving signal to the triac, which as previously mentioned, is turned on approximately 100 msec after the main switch is activated. The delay is accomplished by the time constant of R_{65} and C_{39}. The dc regulator is short-circuit protected; the tripping current is approximately 1 A.

Acknowledgement

The pulser has been developed for Professor Antoni K. Oppenheim of the Department of Aeronautical Sciences of the University of California in Berkeley, under Contract No. USAF AFOSR-I29-67.

The author tanks Dr. George J. Hecht for the various discussions during development of the pulser, and Mr. Kenneth Hom for

his cooperation in the final testing of the pulser and his assistance for preparing the photographs in this report.

References

1. George J. Hecht, Gerald B. Stell and Antoni K. Oppehnheim, High Speed Stroboscopic Photography Using a Kerr Cell modulated Laser Source, Instrument Society of America, 5, [2] 133 (April 1966).
2. Harold W. Miller and Q. A. Kerns, Transistors for Avalanche-Mode Operation, Rev. Sci. Intr. 33, 887 (1962).
3. C. C. Lo, 1-kHz Spark Gap Trigger Amplifier, Lawrence Radiation Laboratory-Berkeley, Engineering Note EET-1303, March 1969.

Table I. Chokes and transformers used in the pulser.

Item	Type	Winding Description
T_1	Indiana General CF101, Q-2 toroid	Primary: 4 turns evenly distributed. Secondary: 3 turns on one half of the core, another 3 turns on the other half of the core.
T_2	Indiana General CF122, H toroid (2 toroids)	Primary: 10 turns evenly distributed. Secondary: 4 turns on one half of the core, another 4 turns on the other half, connected in parallel.
T_3	Triad F16X	
T_4	Indiana General CF123 0-5 toroid (2 toroids)	Primary: 14 turns twisted pair evenly distributed, connected in series. Secondary: 19 turns twisted pair evenly distributed, connected in series; 25 turns twisted pair evenly distributed connected in series.
T_5	Ferroxcube 846T250 3E2A toroid	Primary: 12 turns evenly distributed. Secondary: 4 turns C. T.
L_1	Indiana General CF123, 0-5 toroid (2 toroids)	15 turns twisted pair evenly distributed. #16 plastic insulated.
L_2 L_3 L_4	Ferroxcube 846T250 3E2A toroid	20 turns evenly distributed.
		NOTE: All wire #20 extruded Teflon. Round off edges of all toroids.

Figure Captions

Fig. 1. Arrangement of laser cavity.

Fig. 2. Block diagram of the 2-MHz 8-kV pulse generator.

Fig. 3. 2-MHz 8-kV pulser timing circuit and driver.

Fig. 4. 2-MHz 8-kV pulser final stage (mounted in laser cavity).

Fig. 5. 2-MHz 8-kV pulser power supplies circuit.

Fig. 6. Laser cavity, showing the mounting of the final stage of the 8-kV pulse generator.

Fig. 7. Voltage waveform across Pockels cell.

Fig. 8. Main chassis components layout.

Fig. 9. Main chassis and final stage.

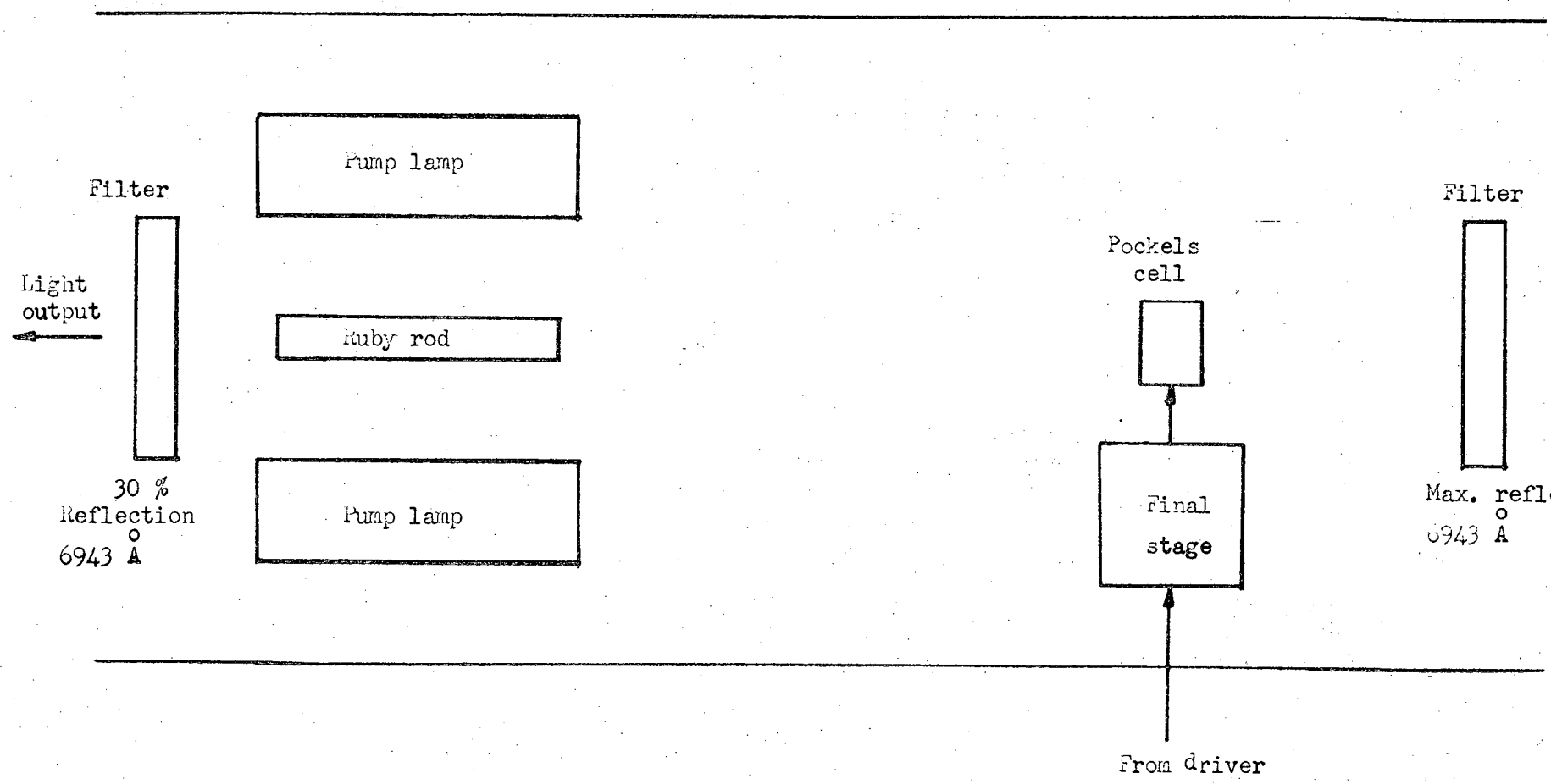

XBL 699-1392

Fig. 1

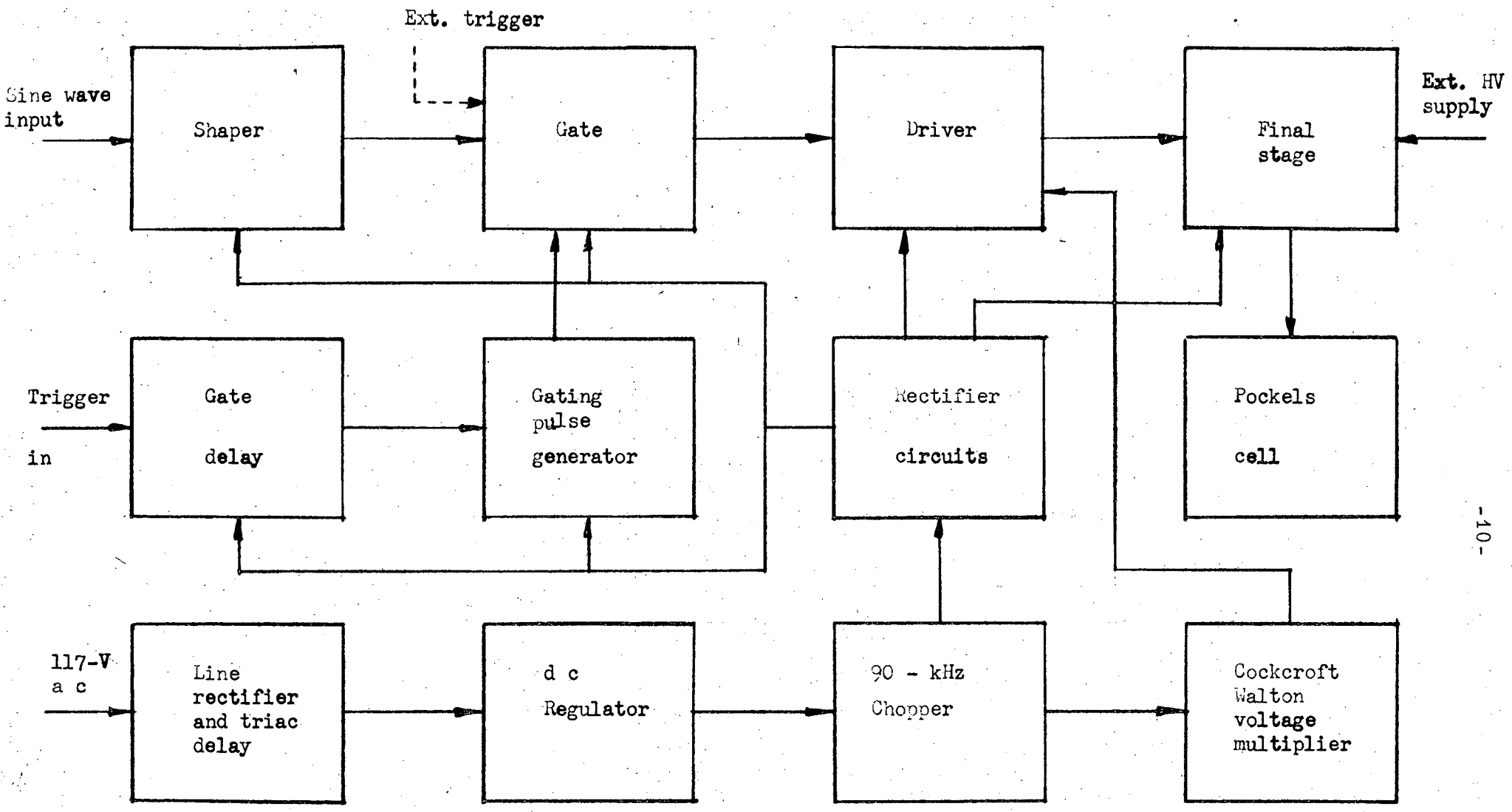

XBL 699-1393

Fig. 2

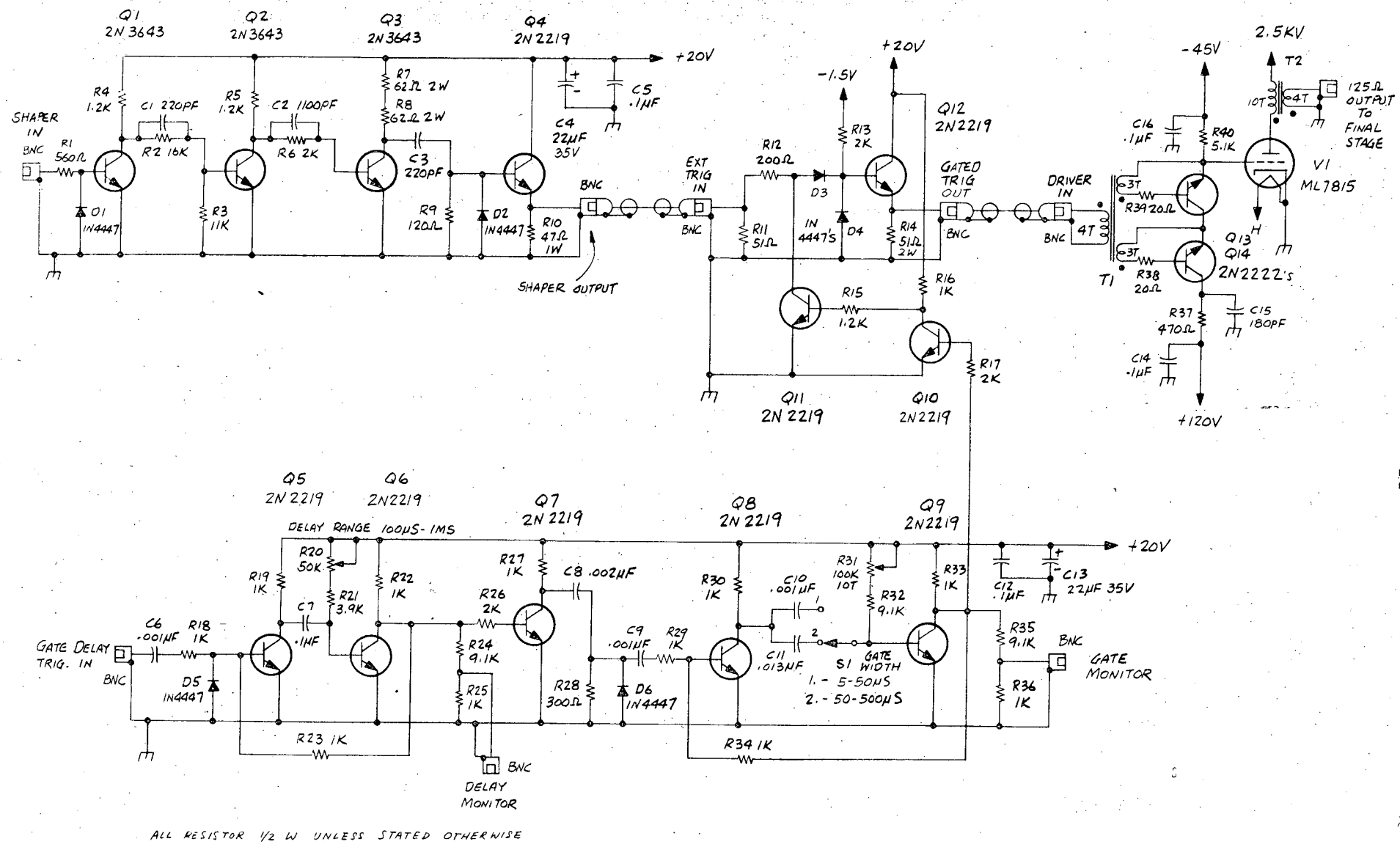

ALL RESISTOR 1/2 W UNLESS STATED OTHERWISE

Fig. 3

XBL 698-1195

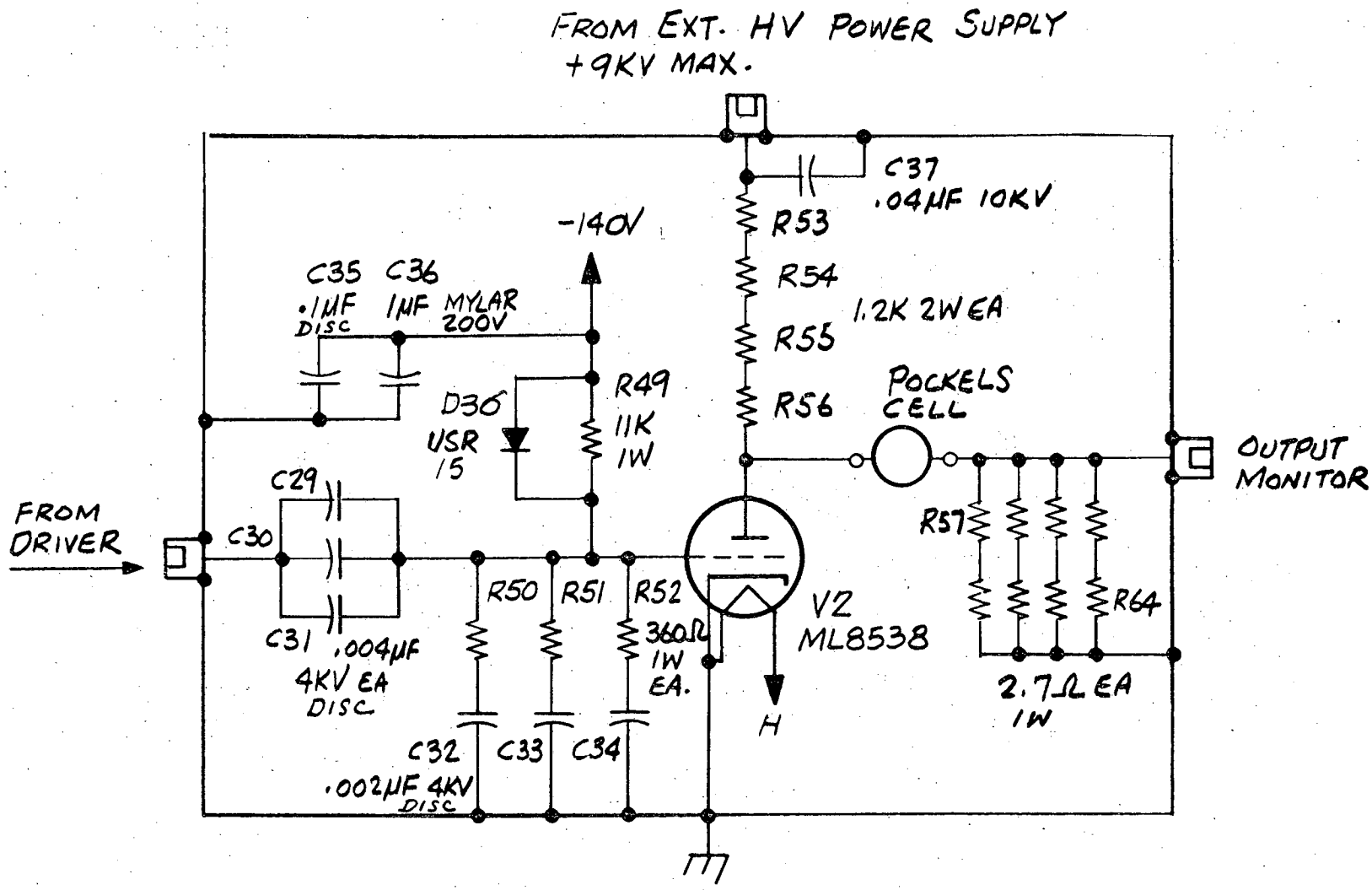

Fig. 4

XBL 698-1193

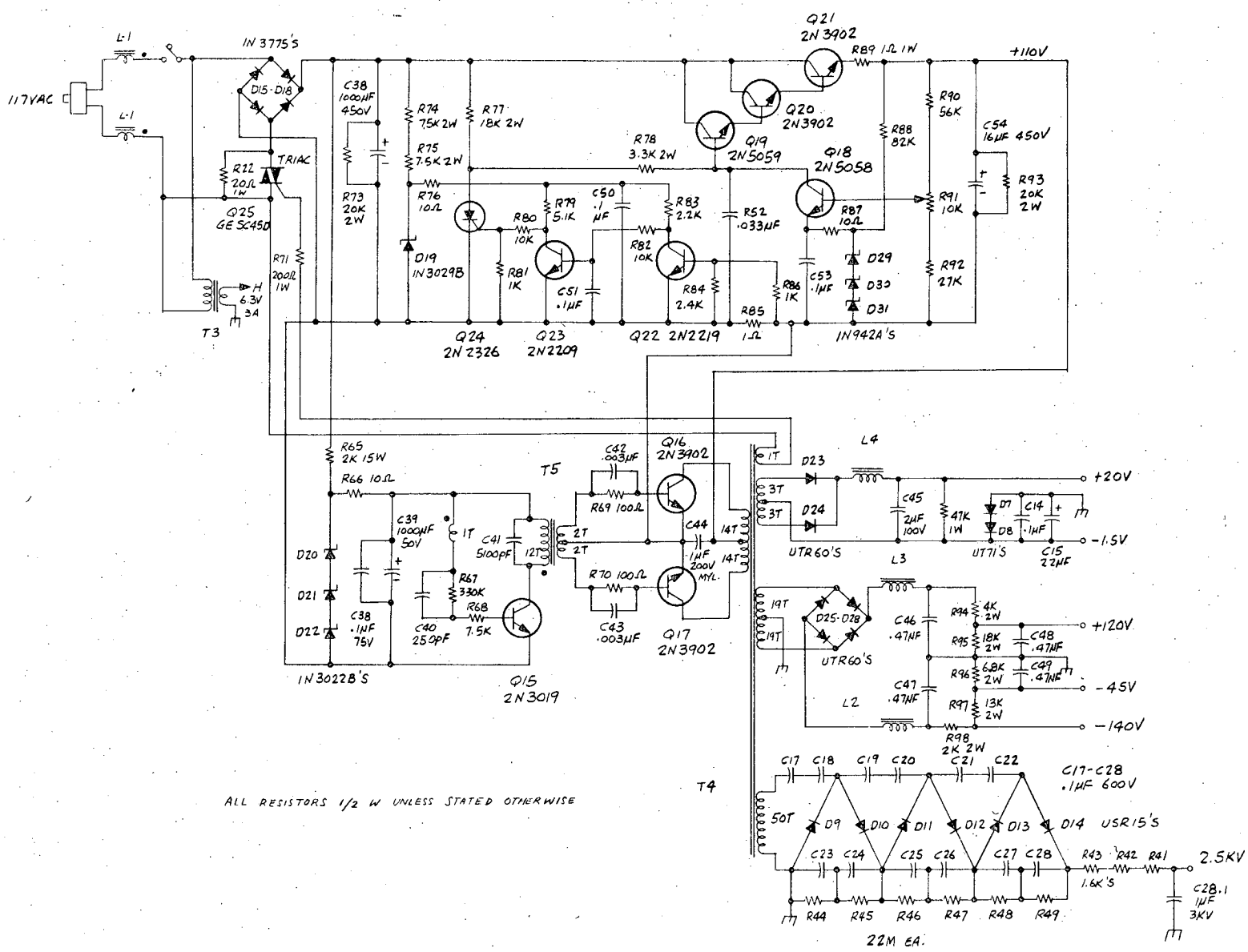

Fig. 5

XBL 698-1194

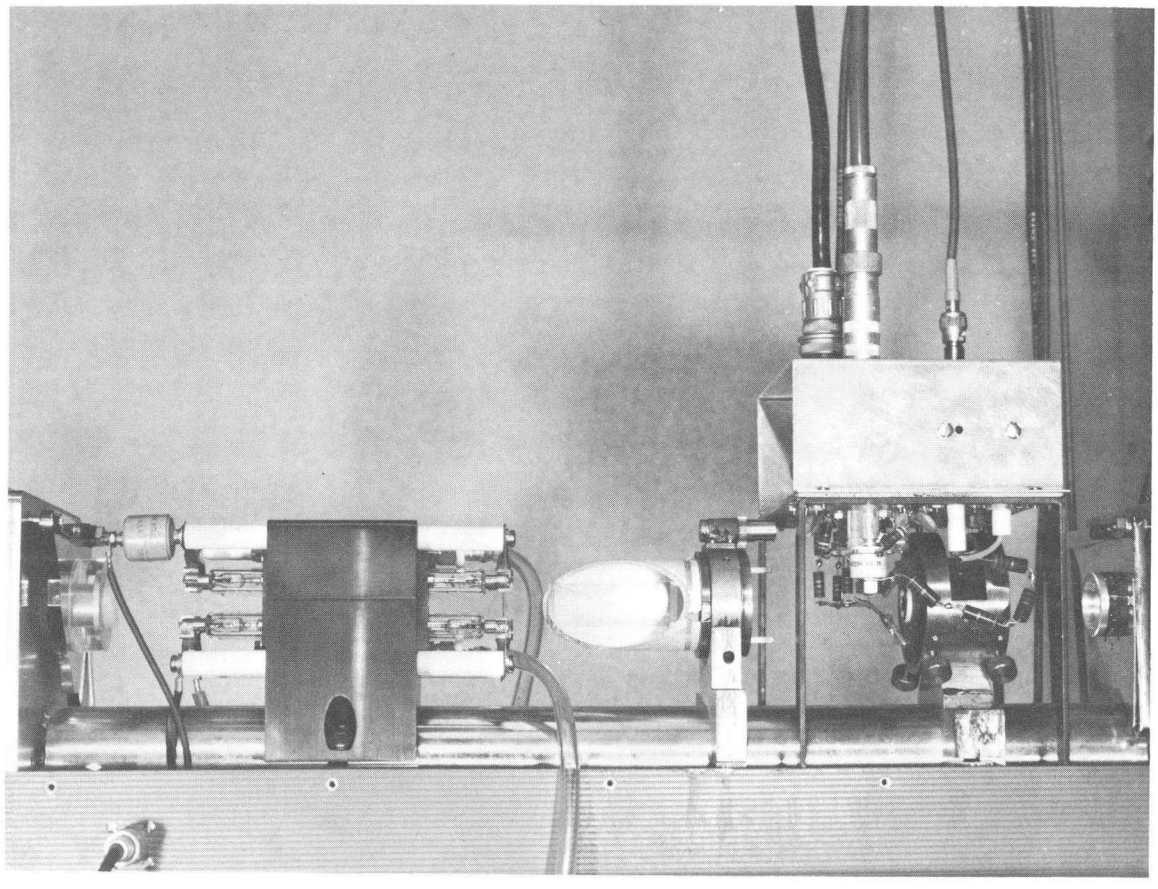

XBB 698-5652

Fig. 6

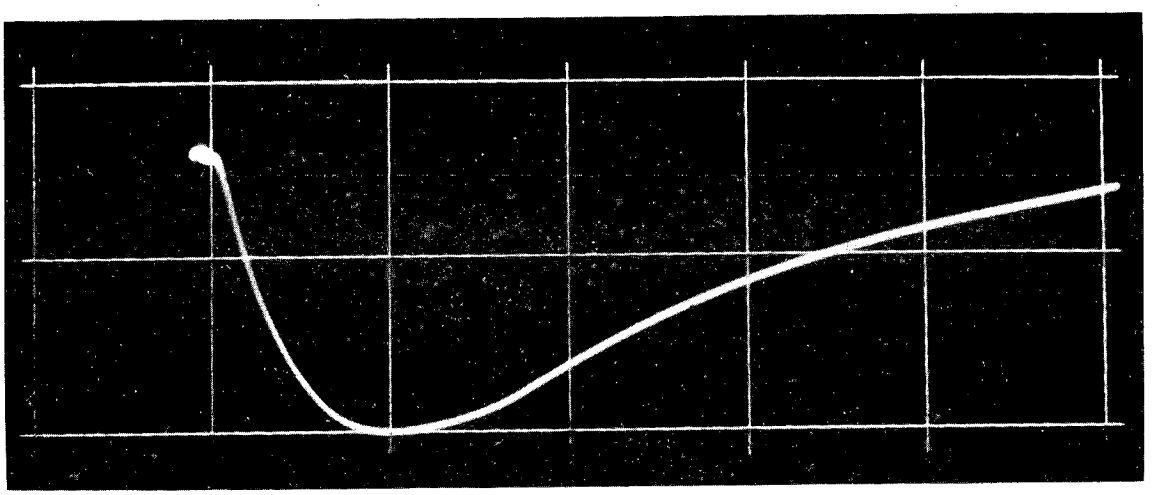

XBB 698-5688

Fig. 7

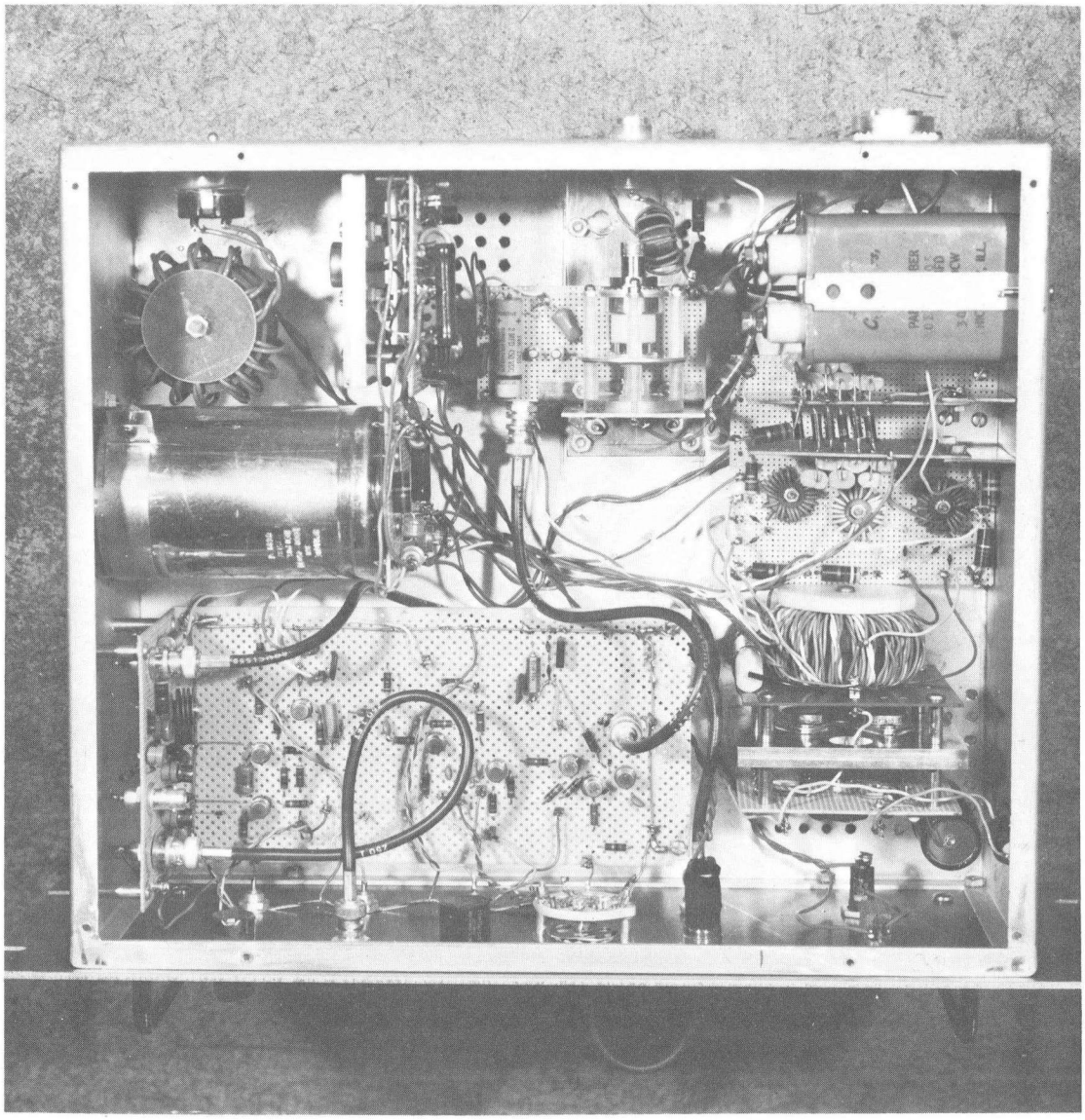

XBB 698-5654

Fig. 8

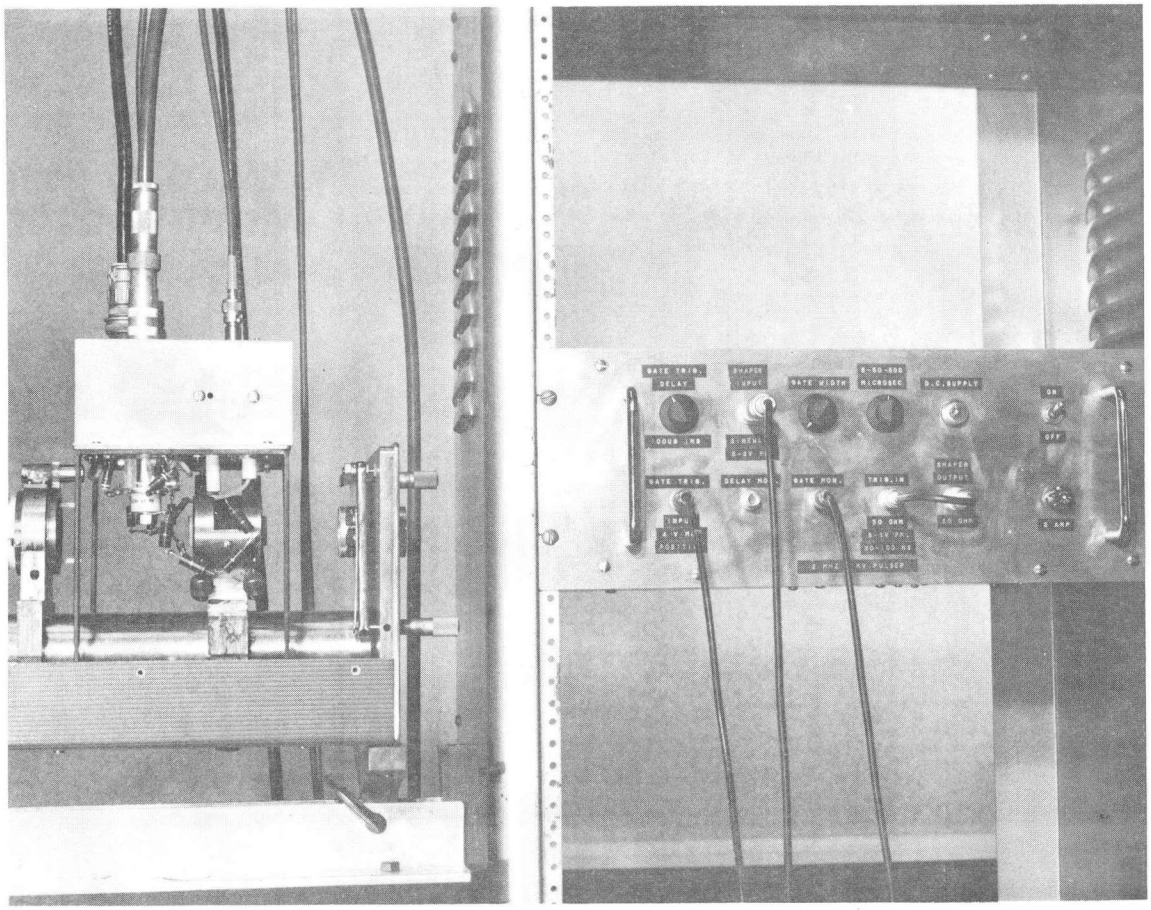

XBB 698-5653

Fig. 9

LEGAL NOTICE

This report was prepared as an account of Government sponsored work. Neither the United States, nor the Commission, nor any person acting on behalf of the Commission:

A. Makes any warranty or representation, expressed or implied, with respect to the accuracy, completeness, or usefulness of the information contained in this report, or that the use of any information, apparatus, method, or process disclosed in this report may not infringe privately owned rights; or

B. Assumes any liabilities with respect to the use of, or for damages resulting from the use of any information, apparatus, method, or process disclosed in this report.

As used in the above, "person acting on behalf of the Commission" includes any employee or contractor of the Commission, or employee of such contractor, to the extent that such employee or contractor of the Commission, or employee of such contractor prepares, disseminates, or provides access to, any information pursuant to his employment or contract with the Commission, or his employment with such contractor.

TECHNICAL INFORMATION DIVISION
LAWRENCE RADIATION LABORATORY
UNIVERSITY OF CALIFORNIA
BERKELEY, CALIFORNIA 94720