Submitted to Physical Review

UCRL-19277
Preprint

cy. 2

RECEIVED
LAWRENCE
RADIATION LABORATORY

DEC 18 1969

LIBRARY AND
DOCUMENTS SECTION

MEASUREMENTS OF THE LIFETIMES OF POSITIVE AND NEGATIVE PIONS

David S. Ayres, Allan M. Cormack, Arthur J. Greenberg,
Robert W. Kenney, David O. Caldwell, Virgil B. Elings,
William P. Hesse, and Rollin J. Morrison

September 30, 1969

AEC Contract No. W-7405-eng-48

TWO-WEEK LOAN COPY

This is a Library Circulating Copy which may be borrowed for two weeks. For a personal retention copy, call Tech. Info. Division, Ext. 5545

LAWRENCE RADIATION LABORATORY
UNIVERSITY of CALIFORNIA BERKELEY

UCRL-19277

cy. 2

DISCLAIMER

This document was prepared as an account of work sponsored by the United States Government. While this document is believed to contain correct information, neither the United States Government nor any agency thereof, nor the Regents of the University of California, nor any of their employees, makes any warranty, express or implied, or assumes any legal responsibility for the accuracy, completeness, or usefulness of any information, apparatus, product, or process disclosed, or represents that its use would not infringe privately owned rights. Reference herein to any specific commercial product, process, or service by its trade name, trademark, manufacturer, or otherwise, does not necessarily constitute or imply its endorsement, recommendation, or favoring by the United States Government or any agency thereof, or the Regents of the University of California. The views and opinions of authors expressed herein do not necessarily state or reflect those of the United States Government or any agency thereof or the Regents of the University of California.

MEASUREMENTS OF THE LIFETIMES OF POSITIVE AND NEGATIVE PIONS*

David S. Ayres,† Allan M. Cormack,‡ Arthur J. Greenberg,§ and Robert W. Kenney

Lawrence Radiation Laboratory, University of California
Berkeley, California 94720

and

David O. Caldwell, Virgil B. Elings, William P. Hesse, and Rollin J. Morrison

Department of Physics, University of California
Santa Barbara, California

September 30, 1969

ABSTRACT

The experiment described here compares the lifetimes of π^+ and π^- by measuring the fraction of surviving pions at several positions along a 35-ft (one-half lifetime) decay path. The result of the measurement, $\tau(\pi^+)/\tau(\pi^-) = 1.00055 \pm 0.00071$, is consistent with the CPT theorem, which predicts that a particle and its antiparticle have equal lifetimes. The beam polarity was alternated frequently between positive and negative particles, and many precautions were taken to insure that the π^+ and π^- beams were identical in their spatial and momentum distributions. Most of the running time was spent investigating possible sources of systematic bias which might make the lifetimes appear to be different, and a number of these systematic errors were found and eliminated. Using a time-of-flight determination of the pion velocity, we obtain a value of the charged pion lifetime, $\tau = 26.02 \pm 0.04$ nsec. The good agreement between this value for pions in flight and the result

of independent measurements with pions at rest provides the most precise verification of time dilation. In the model of Lundberg and Rédei this comparison sets an upper limit on a fundamental length of 3×10^{-15} cm. The velocities of the π^+ and π^- beams were compared by time of flight and the momenta by use of a magnetic spectrometer. Together the measurements determine $m(\pi^+)/m(\pi^-) = 1.0002 \pm 0.0005$.

I. INTRODUCTION

The CPT theorem states that all interaction Hamiltonians are invariant under the combined operations of C, P, and T applied in any order. One consequence of this invariance is the prediction that the total lifetimes of particle and antiparticle must be equal.[1] The experiment described here is a comparison of the lifetimes of π^+ and its antiparticle π^-, performed at the Lawrence Radiation Laboratory's 184-inch cyclotron.[2] Since CPT invariance is a sufficient but not necessary condition for the equality of lifetimes, CPT might not be conserved in this non-strangeness-changing decay, and equality could result from CP invariance.

The CPT theorem puts CPT symmetry on a very different foundation from the operations C, P, T, and CP. The theorem is tied intimately to the ideas of field theory, although not to any one form of field theory, and if CPT is found to be violated anywhere, a complete reworking of the basis of field theory will be required. The observed CP violation in the decay of the neutral kaon implied a violation of either T or CPT (or both) in that decay. Although recent work suggests that the decay is not invariant under T,[3] there is no evidence that the CP and T violations occur in such a way as to preserve CPT symmetry.

Because previous lifetime measurements have been performed on pions at rest, our measurements in flight serve also as a check of the predictions of special relativity and can be used in the model of Lundberg and Rédei to set an upper limit on a fundamental length.[4]

Alternatively, the comparison provides a valuable check on systematic errors.

Prior to this work there was disagreement among various determinations of the absolute lifetime, and in addition three lifetime-difference experiments all suggested that π^+ might be longer-lived than π^-.[5-7] The experiment of Ref. 7 used a method similar to that of the present experiment.

Because the π^- lifetime cannot be measured at rest, we determined the lifetimes of both π^+ and π^- in flight. A nearly parallel beam of pions was alternated between π^+ and π^- by reversing the polarity of the secondary-beam magnets. The system of upstream counters that monitored the intensity of the beam included a focusing Cerenkov counter which identified pions. The fraction of beam pions that had not decayed was measured at different positions along the beam path by a similar, movable Cerenkov counter. The pion beam was well confined within this counter at all positions along the 35-ft (one-half lifetime) decay path.

The variation of the pion fraction with distance determined the lifetime in the laboratory system. Deriving the <u>difference</u> between the proper lifetimes of π^+ and π^- requires measuring the difference between the velocities of the positive and negative beams; the absolute beam velocity does not have to be known very accurately. A precise measurement of the <u>absolute</u> lifetime, however, requires corresponding precision in the velocity. Hence, our ratio of the pion lifetimes is considerably more precise than the absolute lifetime.

The most significant improvements in the present experiment over the work of Ref. 7 were (1) a 100-fold increase in the pion flux, (2) the use of either liquid deuterium or liquid hydrogen as the radiating medium in the movable Cerenkov counter, (3) the use of a second Cerenkov counter to provide positive identification of pions in the intensity monitor, (4) greatly improved designs for the two Cerenkov counters, (5) more critical treatment of systematic errors, and (6) completely new counter and electronic systems. Liquid deuterium was used for the ratio measurement; charge independence insured that the effect of interactions in the Cerenkov counters was the same for π^+ and π^-.

II. EXPERIMENTAL METHOD

A. The Beam

The beam layout is shown in Fig. 1. To avoid bias in the lifetime-ratio measurement, we tried to make the π^+ and π^- beams identical in all respects. Except for the cyclotron fringe field, the magnetic field along the entire pion beam line reversed when changing from π^+ to π^-. The fringe field along the secondary beam was small, and was further reduced by wrapping the beam vacuum pipe, from the beryllium target to the movable Cerenkov counter (C_D), with transformer steel. The proton beam intensity was measured by a secondary-emission monitor, and its steering was monitored by a split ion chamber. The π^+ and π^- rates were made equal by adjusting the filament current of the cyclotron ion source, and hence no changes in the beam-spill characteristics resulted.

Pions produced at 15 deg were momentum-analyzed and brought to an image at the 2-in.-thick lead collimator which defined the beam momentum and the momentum acceptance (±0.5%). The pion beam was symmetric about the collimator, so that a second, dispersionless image of the production target was formed at counter M_4. Finally, the 12-in.-diam quadrupole triplet brought the particles diverging from M_4 to a focus near the end of the 35-ft decay path.

The pion beam traveled in vacuum except for the scintillation counters (M_1, M_2, M_3, and M_4), the electron veto counter (A_e), and the monitor Cerenkov counter (C_M). These counters were made as thin as possible to minimize the effect of the different π^+ and π^- scattering cross sections. There was continuous vacuum from M_4 to C_D. Particles scattered by M_4 and C_M were vetoed by the anticoincidence counters A_2 to A_6, each consisting of an 8-in.-square sheet of scintillator, with the beam passing through a central hole. These counters were mounted inside the vacuum system and had no wrappings around the hole edges, so that any particle which scattered significantly in them produced enough light to veto itself. They also served to define the unscattered beam entering the quadrupole triplet, insuring that the beam was contained within a 5.5-in.-diam envelope along the decay path.

The differential Cerenkov counters, C_M and C_D, responded only to pions, and used either liquid hydrogen or liquid deuterium as radiating media.[8] These detectors were designed to count only particles with velocity $\beta = 0.920 \pm 0.009$, traveling parallel to the axis. They had efficiencies of 0.04% and 1%, respectively, for the momentum-analyzed beam muons ($\beta = 0.95$). These muons constituted 8% of the particles in

the negative beam which were not electrons; in the positive beam the corresponding fraction was 10%.

The relatively low scattering and nuclear-interaction cross sections of hydrogen and deuterium made them far superior to other radiators in spite of cryogenic problems. Nuclear interactions were of particular concern because the pion momentum was near the peak of the first $J = 3/2$, $I = 3/2$ pion-nucleon resonance. Liquid deuterium was used for the lifetime-ratio determination to avoid bias from the very different cross sections of π^+ and π^- on hydrogen (200 mb for π^+p and 80 mb for π^-p). The π^+d and π^-d cross sections, although larger than for π^+p, are equal because of charge independence. Liquid hydrogen was used for the absolute lifetime measurements, however, because of the lower cross sections. The slightly lower refractive index of hydrogen required a change in the pion beam momentum from 285 MeV/c with liquid deuterium to 312 MeV/c with liquid hydrogen.[9]

The electron anticoincidence counter A_e was a 36-in.-long, 45-psia, CO_2 Cerenkov counter which responded only to electrons in the beam, all other particles having velocities well below threshold. Because electrons accounted for 35% of the negative beam, but only 7% of the positive beam, they were a potential source of systematic bias. It was important that they were vetoed with high efficiency by the monitor counters. By identifying electrons independently by time of flight, we found the efficiency of A_e to be 99.3%±0.1%. Since C_M detected electrons with only 1% efficiency, the overall efficiency of the pion monitor for counting electrons was 0.007%.

Protons could have been a troublesome component of the positive beam, since they had no counterpart in the negative beam. These particles were stopped in C_M, however, and failed to count.

B. The Pion Detectors

The construction, operation, and performance of the two differential Cerenkov counters have been described elsewhere,[8] and will be treated only briefly here. The monitor Cerenkov counter C_M is shown schematically in Fig. 2, and the movable counter C_D in Fig. 3. To provide uniform efficiency over the entire aperture the radiating liquid was surrounded by a cylindrical mirror having a diameter of 4-in. for C_M and 7-in. for C_D. Cerenkov light was focused at the ring diaphragm by the quartz lenses. Paraxial particles produced a ring image of radius $f \tan\theta$, where f is the focal length of the lens system and θ is the Cerenkov angle. Light from pions of the central momentum passed through the annular aperture in the diaphragm which was viewed by the central phototube, while light from higher-velocity particles fell outside the ring aperture and was detected by the anticoincidence photomultipliers.

Particles that had the proper velocity but were traveling at small angles to the axis produced light which was focused to a nearly circular image whose center was shifted with respect to the center of the ring diaphragm. Although some light from such particles reached the central phototube, much of their light fell outside the aperture and was detected by the anticoincidence photomultipliers. This property was particularly important in C_D, since decay muons produced at 7

deg in the laboratory had the same velocity as beam pions and otherwise would have counted as pions.

The light from pions admitted by the ring aperture was reflected into the central phototube by a conical mirror. Ultraviolet-transmitting Lucite light pipes brought the light from the two halves of the anticoincidence ring to the two anticoincidence phototubes. In each counter, the output pulses of these two phototubes were added before pulse-height discrimination.

It was important that the movable counter have uniform efficiency across its entire entrance aperture. Because of correlation between the entrance position of a pion and the position of its Cerenkov light on the photomultiplier face, it was necessary to select a phototube with an exceptionally uniform efficiency across its face. In addition, a more acute reflecting cone was installed so that only the central 3.5-in. diameter of the 5-in. tube face was used. The pion efficiency gradients were then less than 0.2%/in. The new reflecting cone reduced the effective aperture of C_D to a 5.5-in.-diam circle, however. Particles entering the flask outside this region counted with several percent lower efficiency than those within the central circle.

A large fraction of the running time was devoted to studying the properties of C_M and C_D. The pulse-height distributions from their central phototubes were particularly valuable. The distributions for C_D shown in Fig. 4 illustrate the effect of pion interactions in the liquid-hydrogen radiator. Each curve is the spectrum of C_D pulses which were in coincidence with a count in the upstream pion monitor and exceeded the C_D discriminator threshold. Most small pulses

resulted from pions that entered the counter and penetrated only a short distance before undergoing a nuclear interaction. The pulse height for such particles was proportional to the distance traveled before interaction. The π^+ and π^- distributions in Fig. 4 correspond to the same number of monitor counts. Because more interactions occurred for π^+, the π^+ distribution has more small-amplitude pulses and fewer large-amplitude pulses than the π^- distribution. The corresponding spectrum when liquid deuterium was used in the counter had even more small-amplitude pulses. With this radiating medium, however, the plus and minus spectra were identical, as expected from charged independence.

The number of interacting pions counted by C_M or C_D could be greatly reduced by requiring pions to traverse the entire radiator and count in a downstream scintillator, e.g., M_4 after C_M. The movable counter C_D could not be operated in this manner, however, because of the requirement that the Cerenkov counter efficiency be independent of small changes in beam position. A downstream coincidence counter improved the pulse-height distribution because it failed to intercept most of the pions that scattered in the radiator, and this fact made the efficiency sensitive to beam position within the counter.

C. Electronics and Data-Taking Procedure

The electronic logic employed conventional 100-MHz transistorized modules. The "monitor" coincidence M identified as pions those particles that counted in M_1, M_2, M_3, M_4, and C_M (the central photomultiplier), but not in A_1 to A_6, A_e, or A_M (the C_M anti-

coincidence ring). The "data" coincidence D, identifying particles which counted in M and C_D (the central photomultiplier) but not in A_D (the C_D anticoincidence ring), recorded the number of pions that had not decayed before reaching the movable Cerenkov counter. Because D and M were used to calculate the lifetime and lifetime ratio, each of these coincidences was scaled on two independent 100-MHz scalers.

Many other coincidences (some of which are listed in Table I) were used to monitor the beam composition and the performance of various counters. For example, the ratio $B\overline{\Sigma A}/B$ was sensitive to any malfunction in the veto counters A_2 through A_6, while $S/B\overline{\Sigma A}$ measured the electron contamination and the performance of A_e. The effect of the Cerenkov-counter anticoincidence rings was monitored by comparing coincidences with $\overline{A}_M$ and $\overline{A}_D$ to results without these veto requirements. Since pions counted with nearly 100% efficiency in the $_M$ central photomultiplier and there were no electrons in the T coincidence, $T\overline{C}_M$ identified muons in the beam. The ratios V/L and X/S, the fractions of beam muons and electrons counted by C_D, were extremely sensitive to the C_D discriminator level. They provided not only a criterion for setting this threshold but also served as good indicators of gain changes in the C_D photomultiplier.

The DM_5 coincidence recorded particles that counted both in C_D and in M_5, a 12-in.-square scintillator behind C_D. Since most particles undergoing a large deflection in the Cerenkov medium were excluded, the ratio DM_5/M was relatively insensitive to fluctuations of the C_D photomultiplier gain. Such gain variations could thus be inferred when the data showed normal values of DM_5/M, but deviations

in D/M greatly exceeding expected statistical fluctuations.

A single data run took about one week and could achieve a statistical accuracy of better than 0.1% for the lifetime ratio. Operating conditions often were changed significantly between the several data runs; for example, the C_D photomultiplier and conical mirror were sometimes replaced to achieve greater gain stability, more uniform response across the face of the counter, and a wider effective aperture. For this reason each run was treated as an independent determination of the lifetime and the lifetime ratio.

Data were taken along the decay path at seven positions of C_D roughly 6 ft apart and labeled DP1 through DP7 in order of increasing distance downstream. Frequent polarity reversals, which took only 10 min, minimized the effects of any slow changes in counter efficiencies. The movable counter was kept at one position for 6 to 12 hours, during which the beam polarity was changed at 1-hour intervals and the contents of all the scalers read out every 15 min. The scalers were simultaneously recorded by a typewriter and a magnetic tape unit. Computer analysis of the data on magnetic tape, completed within a few hours of acquisition, was used to detect subtle systematic errors while a run was in progress.

The same statistical accuracy in D/M was obtained at each position; for example, twice as much time was spent at DP7 as at DP1. Eight measurements of D/M, the ratios used to calculate the lifetime and the lifetime difference, were made on each polarity at every position. Although there was a great statistical advantage to taking data only at DP1 and DP7, a large fraction of the time was spent at the

intermediate positions. In this way we could detect apparent deviations from exponential attenuation of the beam with distance, which would indicate serious systematic errors. We returned to each position several times during a run to check reproducibility of the data.

D. Time-of-Flight Measurement

The attenuation of the pion beam with distance depended on the product of the proper lifetime and $\eta = \beta(1-\beta^2)^{-1/2} = p/m$. (See Sec. IV-A.) The most precise measurement of η used the time-of-flight method to find the mean pion velocity. The measurement used two additional scintillation counters, T_1 and T_2, each 2.5-in.-square and 0.5-in.-thick. The upstream counter T_1 was located between C_M and M_4 and intercepted all particles in the monitor coincidence. For increased resolution, C_D was removed and the decay path was extended beyond DP7. The downstream counter T_2 was mounted 87 ft from T_1, about 1.1 mean decay lengths from DP1. A continuous, magnetically shielded, vacuum pipe extended from M_4 to T_2.

The difference t between the times of flight of momentum-analyzed electrons and pions was measured. By using this difference and the fact that $\beta = 1$ for the electrons, we found the momentum more precisely than was possible using the pion total flight time T. If d is the flight distance, the pion velocity is related to the two time intervals by $\beta = d/cT$ and $\beta = 1/(1+ct/d)$. The uncertainty in β caused by a given relative error in T or d in the first case is larger than that caused by t or d in the second by a factor $\gamma^2(1+\beta)$, about 11 in this experiment. Uncertainty in the flight distance caused negligible error since

momentum was derived from the pion-electron time difference: A 0.1% momentum measurement required an accuracy of only 5 cm. Another advantage of the approach was that the effects of drifts in the electronics was minimized. For example, although a change in the secondary-electron transit time of the T_1 or T_2 phototube changes the apparent pion time of flight, the difference in flight times between pions and electrons is not affected.

Discriminated signals from T_1 and T_2 were used as START and STOP inputs to a time-to-amplitude converter (TAC). The TAC output was recorded by a pulse-height analyzer (PHA) gated so that data were stored only for particles counting in T_1 and T_2 and satisfying either the M coincidence (particles identified as pions at C_M) or the $B\overline{\Sigma A}\ A_e$ coincidence (electrons identified by A_e). Because of pion decay between C_M and T_2, the "pion" peak in the time-of-flight distribution included a background of decay muons which might have biased the apparent pion time of flight; however, calculations show that the background was small enough and sufficiently symmetric about the true pion mean so that negligible error was introduced.

The measurement was made by alternately accumulating particle data and calibrating the TAC-PHA system against the time delays of two calibration cables. The procedure was repeated 18 times so that the effect of systematic drifts could be estimated from the internal consistency among the data. The mean for each electron and pion time-of-flight peak was found by a least-squares fit to a Gaussian plus constant background. Chi square per degree of freedom (χ^2/d) averaged 1.3 for electrons and 0.8 for pions. The fit to a peak typically used 14 channels.

Varying this number or fitting to a Gaussian without background changed the mean pion-electron difference only a few hundredths of a channel. The number of PHA channels between electrons and pions was 107.54 ± 0.11, the uncertainty being the standard deviation of the mean of the 18 runs.

The precision in the derived beam momentum depended critically on the calibration of the TAC-PHA system, i.e., the number of channels per nanosecond. The calibration procedure, carried out between each data run, used the dual outputs of a pulser as START and STOP inputs to the TAC. Internal delays were chosen so that the resulting peak in the PHA spectrum occurred approximately at the position of the pion peak. One of the calibration cables was then added between the pulser and the START input so that the generated peak fell below the position of the electron peak. (The pion and electron flight times differed by about 9 nsec; the two cables had delays of about 10 and 20 nsec.) The number of channels the generated peak changed when the cable was added corresponded to the known cable delay. Because it was necessary to measure this change to better than one channel, additional time jitter was introduced in one of the TAC inputs. The signal from one output of the pulse generator triggered a light pulser (a gallium phosphide diode) viewed by a phototube whose output then went to the TAC. Without the phototube the calibration peaks fell in a single PHA channel. With the added jitter the peaks were similar to those produced by beam particles; means for these peaks were found by a curve-fitting procedure like that used for particle data.

Much effort was devoted to finding the time delay of the two calibration cables. The technique which was developed compared the shift in arrival time of pulses delayed by the cable with a shift resulting from a known change in the period of a pulse generator. An arrangement of fast-logic modules extracted a pair of sequential pulses from the wave train of a high-frequency pulser, then routed the first to the START input of a TAC, and the second to STOP. At the TAC these pulses were separated in time by $1/\nu_1 + C$, where ν_1 is the frequency of the pulse generator and C is the inherent time difference between the paths from the pulser to the two inputs of the TAC. Pulse pairs generated in this way produced a peak in the pulse-height distribution of the output of the TAC.

The generator frequency was then changed to ν_2. A new peak corresponding to $1/\nu_2 + C$, where C was unchanged, was produced. The time scale of the system (channels/nsec) was thus determined, since the number of channels between the peaks corresponded to a known time difference: $1/\nu_1 - 1/\nu_2$. If, instead of changing the frequency, we added a cable delay to one of the TAC inputs, the number of channels the peak changed determined the time delay.

Because of attentuation and dispersion in the cable, the effective delay depended on the initial rise time of the transmitted pulse and on the threshold of the subsequent discrimination. For this reason the modules preceding and following the cable in the cable measurement setup were the same ones used during the time-of-flight calibrations.

The measurement of the reference cables and the reduction of the time-of-flight data both depended on the linearity of the TAC and PHA. The differential linearity of the combined system was measured by generating START and STOP pulses having a random time separation. The integral linearity was deduced from the accumulated spectrum. The relative error in the pion-electron transit-time difference from this nonlinearity was less than 0.10%.

The other major source of error in the derived time difference was random timing fluctuations in the electronics during the acquisition of the particle data, the calibration of the system, and the measurement of the cable delays. The total relative error in the time difference was 0.16%; in η or the momentum, 0.09%. Since the lifetime data were taken without T_1 in the beam, the momentum was corrected for the pion energy loss in the scintillator. This loss was calculated from the stopping powers of hydrogen and carbon to be 3.13 MeV with an estimated uncertainty of 5%. From the results of the time-of-flight measurement the beam momentum during the runs with liquid hydrogen in the Cerenkov counters was 311.89 ± 0.32 MeV/c.

III. SYSTEMATIC ERRORS

A. Equality of the Velocities of the Positive and Negative Beams

To derive the difference between the π^+ and π^- lifetimes, any difference between the velocities of the positive and negative beams had to be measured. Precautions were taken to minimize the difference in the momenta of the two beams. Magnetic shielding reduced

the nonreversing cyclotron fringe field to less than 0.2 gauss along the beam line. Nuclear-magnetic-resonance devices in the two bending magnets guaranteed long-term stability and equality of the central fields for π^+ and π^- to 0.005%. Three types of measurements verified that the π^+ and π^- beams had the same velocity or the same momentum.

The first technique was to measure the efficiency of C_M or C_D for both π^+ and π^- as a function of momentum in the region of the pion peak. Because the Cerenkov-counter efficiency depended on the pion velocity, the steep sides of the peaks (a 1% change in momentum gave a 30% change in efficiency) permitted a precise comparison of the π^+ and π^- velocities. The results of six different determinations made under a variety of conditions are shown in Table II. Note that if the plus and minus velocities are assumed to be equal, the measurements demonstrate the similarity of counter response to π^+ and π^-.

The time-of-flight measurement previously discussed provided another accurate comparison of the π^+ and π^- velocities. Many of the systematic errors which limit the precision of the absolute-velocity determination have little effect on the measurement of the velocity difference. In particular, an accurate value of nanoseconds per PHA channel is not needed. Six measurements of the time-of-flight difference between pions and electrons, alternating in polarity, gave $(\eta_+ - \eta_-)/\eta$ values ($\times 10^{-4}$) of 0.5, 0.5, and -5.0.

The third technique used an auxiliary bending magnet at a point along the decay path and four wire spark chambers with magnetostrictive readout. Systematic problems affected the measurement of the plus-minus momentum difference much less than the absolute momentum. Four

measurements of $(p_+ - p_-)/p$ yielded values ($\times 10^{-4}$) of -0.4, -3.4, 2.5, and 4.8.

Mean values of the time-of-flight and magnetic-spectrometer measurements are given in Table II. Together the measurements place a limit on the $\pi^+ - \pi^-$ mass difference: $(m_+ - m_-)/m = (2 \pm 5) \times 10^{-4}$. The precision is comparable to previous measurements.[10]

The three types of measurements gave no indication of any difference in the widths of the plus and minus momentum distributions. Actually only the mean of the distribution was of importance. If the momentum width of the beam were ten times greater, the observed pion attenuation would be changed only 0.02%.

B. Difficulties Caused by Pion Interactions

Because pions interacted in the radiator of C_D, the movable Cerenkov counter, pulses from the central photomultiplier had a pulse-height spectrum which extended below the discrimination level. The counter efficiency was thus sensitive to the precise gain of the tube. Four systematic errors associated with this problem will be discussed.

The need for a phototube with uniform efficiency across its face has been mentioned. The lateral variation in C_D efficiency caused by lack of uniformity in the phototube was serious because of the gradually increasing horizontal separation of the positive and negative beams along the decay path. The effect caused π^+ and π^- to appear to have different lifetimes because, as C_D was moved downstream, one sign was counted with gradually increasing efficiency, and the other with decreasing efficiency. For the data runs used in the final analysis,

corrections to the lifetime ratio for this systematic error were less than 0.03%.

The slight rate dependence of the gain of the C_D central photomultiplier was a second systematic difficulty. The gain of the tube decreased as C_D was moved downstream, where the counting rate was lower. For a given change in gain, the change in efficiency for counting pions depended on the relative depth of the valley of the pulse-height spectrum. Thus, with liquid hydrogen in the Cerenkov counter, the decrease in efficiency (a few tenths of a percent) was greater for π^+ than for π^-, because of the difference in the pulse-height distributions (Fig. 4). The analysis used to derive the absolute lifetime used this fact to correct for the rate dependence. The lifetime ratio was derived from runs with liquid deuterium, however. By using this radiating medium and by keeping the π^+ and π^- rates equal (to within 10%), the pulse-height spectra for the two polarities were identical, and the measured lifetime ratio was free from this source of bias.

The third systematic effect was of special interest because it was also present during the earlier experiment, Ref. 7. When C_D was moved to a new data position, the change in pion flight time required that cable delay be changed for the C_D and A_D photomultiplier pulses so that the $C_D\bar{A}_D$ pulses still arrived at the D coincidence module at the same time as the M-coincidence pulse. During the first experiment and the first part of this experiment, as C_D was moved downstream, cable delay was removed from a signal before pulse-height discrimination. Because of attenuation in the cable delay, a larger fraction of the C_D pulses exceeded the discrimination level (the

detection efficiency was greater) when the counter was at DP7 than when it was at DP1. With liquid hydrogen as the radiating medium, the effect was greater for π^+ than for π^-, with the result that π^+ had an apparently longer lifetime.

When the existence of the effect was recognized, the variable cable delays in C_D and A_D were placed <u>after</u> the discriminators, so that the length of cable between the photomultipliers and the discriminators was constant. Even without this change, however, with liquid deuterium in the Cerenkov counter the variation in efficiency with distance was the same for π^+ and π^-, and the lifetime-ratio measurement was unaffected.

The results of the earlier experiment can now be understood. The anomalously long π^+ lifetime and the lifetime difference with π^+ longer-lived than π^- presumably resulted from the mistake in placement of the variable delay coupled with the use of liquid hydrogen.

Lastly, the nature of the pulse-height distribution made the C_D efficiency sensitive to gain fluctuations in the central phototube. Over time periods shorter than one-half hour particular phototubes exhibited significant variations which could affect π^+ and π^- differently, since polarity was changed only once an hour on the average. Although over long periods there should have been little effect on the measurement, data taken with unstable photomultipliers were not used in the final average. Fast data analysis made it possible to detect gain variations during the course of a run. If such variations were found, the C_D phototube was exchanged for a more stable one.

C. Containment of the Pion Beam and Counting of Decay Muons in C_D

Two other problems were beam pions missing C_D and decay muons spuriously counting in C_D. Investigations of these effects were related, because tests of confinement of the pion beam required that pions and decay muons be distinguished. These two systematic errors affected the measurement of the absolute lifetime more than the lifetime ratio, since they were the same for both charges of pion.

The most direct test of beam confinement used a 12-in.-square wire spark chamber to determine the spatial distribution of the beam at each data position. The presence of undesired tracks prevented this technique from precisely determining the maximum lateral extent of the pions in the monitor coincidence M. Although the chamber was pulsed following an M coincidence, a pion in the monitor could decay and the chamber could record the muon. In addition, pions which were physically in the beam but had not satisfied the M coincidence contributed to the background.

In another test of the beam, C_D and a thin, one-in.-square scintillation counter immediately in front were moved as a unit laterally with respect to the beam line. The scintillator localized the position of the particles detected, and C_D was to distinguish pions from decay muons. The counting rate decreased rapidly with distance from beam center but did not go to zero. A range measurement indicated that the background particles at large radii were muons. Thus C_D had imperfect rejection of decay muons. The measurement with C_D and the scintillator indicated an efficiency of $(11 \pm 5)\%$; the measurement

was imprecise because the counting rate was very low.

The spurious counting of decay muons was probably caused by poor imaging of Cerenkov light, a result of dispersion in the radiating medium. About 1% of the momentum-analyzed muons and 7% of the electrons in the beam produced counts in C_D. The corresponding efficiencies for C_M were smaller, because C_M could be operated in coincidence with a downstream counter, M_4. Also, because the C_D photomultiplier responded to shorter wavelengths than did the C_M tube, the effect of dispersion was greater in C_D. It should be emphasized that the beam muons and electrons which counted in C_D caused negligible error because only particles in the monitor coincidence could satisfy the D coincidence. Because of the efficient operation of C_M and A_e, the monitor coincidence contained less than 0.01% electrons and less than 0.04% beam muons.

Another systematic check was to measure D/M, the fraction of monitor particles counting in C_D, when the counter was off center. The technique determined the correct centering of C_D with respect to the beam and measured the uniformity of its response across its entrance aperture. In addition, the data reflected both the size of the effective aperture of C_D and the size of the beam. Wherever the beam dimensions were smaller than the effective aperture of C_D, the counter could be displaced laterally with no change in D/M. Beam dimensions determined by the spark chamber at one position, together with the data with C_D displaced, measured the effective aperture. The spark-chamber data for the other positions showed that the beam was well confined

within the counter at all positions except DP7.

Corroborating evidence came from absolute lifetime fits to different combinations of data positions. With DP7 data omitted, lifetimes derived from the upstream four or five positions, the downstream four or five positions, and all six positions agreed within statistical error. (If an increasing fraction of the beam had been lost at downstream positions, the "downstream lifetime" would have appeared shorter than the "upstream lifetime.") The data from the first six positions indicated that about 0.2% of the beam was lost at DP7. This position was not used in the absolute-lifetime computation, although it was included in the ratio fit.

Goodness of fit (the χ^2 test) was not a useful indication of systematic errors such as beam loss. Fits determining the absolute lifetime with and without DP7 were both satisfactory, because the decay path was only a fraction of a lifetime. For the same reason, if at every position there had been some loss increasing with distance downstream, the true error could far exceed the statistical error, although the fit might still be good. The spark-chamber profiles of the beam along the decay path were valuable in showing that loss of beam was likely only at the most downstream positions. The data were consistent with the prediction of beam-optics calculations, indicating that near the middle of the decay path the beam envelope was smallest and was well contained within the counter. At positions upstream of this point, the beam was larger, but was sharply limited by counter A_6. In the downstream direction the beam size also increased. Thus, only at the end of the decay path was the beam size likely to exceed the counter aperture.

D. Changes in the Experimental Method

Two variations in the normal experimental arrangement checked possible systematic bias in the lifetime ratio measurement One of these modifications was to remove C_M physically from the beam. This change could reveal systematic bias from the scattering of pions in the radiator of C_M or from the presence in the monitor of particles other than pions. The result of that measurement was

$$\tau(\pi^+)/\tau(\pi^-) = 0.99961 \pm 0.00071,$$

where the error is statistical. Unfortunately, χ^2/d was 1.4 for the lifetime-ratio fit, and the real uncertainty in the result was probably at least 0.001.

A second and more drastic modification of the experimental method was to replace the movable Cerenkov counter with another type of pion detector shown schematically in Fig. 5. This detector selected pions by their strong interactions in an aluminum block. The scintillation counter R identified particles entering the absorber. About 20% of the beam pions stopped in the aluminum, while electrons and muons continued through and were vetoed by the large scintillator A_R. The absorber was considerably thinner than the range of any of the beam particles, and the only pions that stopped in the block (or were scattered at wide enough angles not to count in A_R) did so because of their strong interactions. The greatest disadvantage was the low efficiency of the absorption device, approximately 20% of the C_D efficiency, which meant that runs had to be five times as long as those

with C_D to achieve the same statistical accuracy.

Several systematic checks were made of the performance of the absorption detector before it was used to measure the lifetime ratio. The efficiencies for counting electrons and beam muons were continuously monitored, and were about 5% and 0.08% respectively. Counting of the slow decay muons emitted backwards in the pion rest frame was checked by lowering the beam momentum until beam muons had $\beta = 0.92$ and counted in C_M, making the M coincidence a muon monitor. These muons, degraded so that their velocity was that of backward decay muons, counted in the absorption device with only 0.4% efficiency.

One disturbing feature of the detector's performance was that the efficiency for counting π^- was 20% larger than that for counting π^+. This difference arose because π^- reactions could produce neutral final states which would not be vetoed by A_R, while π^+ reaction products could never be neutral. In addition, χ^2/d for the absolute lifetime fit was about 1.5, with most of the contribution coming from the central data positions where the beam was smallest. The effect was consistent with a higher vetoing efficiency for the smaller beam, showing that a considerable fraction of the "stopping" pions actually were scattered at large angles, missing A_R.

These difficulties seemed to be the same for π^+ and π^-, and there was no reason to doubt the validity of the lifetime comparison. The result of that analysis was

$$\tau(\pi^+)/\tau(\pi^-) = 1.0006 \pm 0.0011,$$

where the uncertainty is purely statistical. The fit involved 106 $\pi^+ - \pi^-$ groups at six different positions along the decay path and gave $\chi^2/d = 0.90$. Both this absorption-device measurement and the C_D measurement with C_M moved out of the beam were regarded as tests of possible systematic bias. The results were not used in the calculation of the final quoted lifetime ratio.

IV. DATA ANALYSIS

A. Lifetime-Ratio Calculation

The lifetime ratio and absolute lifetime were determined from the ratio of M and D coincidences measured as a function of x, the distance from the start of the decay path. If the efficiency of the movable counter is independent of x, the ratio of these coincidences obeys

$$R = D/M = A \exp(-Bx). \qquad (1)$$

The parameter B is the inverse of the mean decay length: $B = 1/\eta c\tau$, where τ is the lifetime in the rest frame and $\eta = \beta(1 - \beta^2)^{-1/2}$. The parameter A can be interpreted as the fraction of pions in the beam at the start of the decay path times the efficiency of C_D for detecting pions; neither of these factors has to be known. Taking the logarithm of Eq. (1) and subtracting the equations for each sign of pion, one finds $\ln(R_+/R_-) = \ln(A_+/A_-) - (B_+ - B_-)x$. A linear, least-squares fit of the quantities $\ln(R_+/R_-)$ as a function of x determines the lifetime difference since

$$B_+ - B_- \approx \left(\frac{\tau_+ - \tau_-}{\tau} + \frac{\eta_+ - \eta_-}{\eta}\right) \frac{1}{\eta c\tau} .$$

The efficiency of C_D for each sign of pion is not required--the lifetime difference depends on the slope of the fitted curve, not its intercept. The efficiencies do not even have to remain constant--the calculation assumes only that the ratio of the π^+ and π^- efficiencies is constant.

The ratio did change slightly with distance along the decay path. The effect was the result of the dependence of C_D efficiency on the lateral position of the beam and the separation of the positive and negative beams which gradually increased with distance. It was possible to make a correction for the effect using measurements of the separation of the two beams and the change in efficiency as C_D was moved across the beam.

Our value of the lifetime ratio is calculated from three runs that were not seriously affected by known systematic errors. No data were omitted from any of these runs, and χ^2 for each fit was consistent with statistical fluctuations. These three runs used liquid deuterium as the Cerenkov medium. Two other runs with deuterium (one without C_M and one for which $\chi^2/d = 1.7$ because of photomultiplier gain changes) were not used in the calculation.

Table III summarizes the data used in the weighted average. The relative lifetime differences labeled "raw data" involve no corrections, and the uncertainties are purely statistical. The last entry gives the lifetime differences including a correction for the lateral variation of the C_D efficiency. Only one of the runs involved a significant correction for the effect. In all three runs, however, the limited precision of the measurements of the efficiency variation contributed

uncertainty in the calculated ratio. The uncertainty of the "corrected" lifetime differences is a combination of (1) statistical error, multiplied by $(\chi^2/d)^{1/2}$ to account for the fact that fluctuations were slightly larger than expected on the basis of statistics alone, (2) a 0.03% upper limit to a possible momentum difference between the positive and negative beams, and (3) the uncertainty of the correction for the lateral efficiency variation (the entry in Table III labeled "lat. slope uncert.").

Our value for the lifetime ratio is the weighted average of the three corrected results:

$$\tau(\pi^+)/\tau(\pi^-) = 1.00055 \pm 0.00071.$$

An indication of the self-consistency of the three results is that $\chi^2/d = 0.8$ for the average. The ratio quoted above differs from that published in Ref. 2, 1.00064 ± 0.00069, which used a less accurate estimate of the C_D efficiency variation correction.

B. Absolute-Lifetime Calculation

The absolute lifetime was determined from one of the runs using liquid hydrogen in the Cerenkov counters. Because fewer pions interact in hydrogen than in deuterium, the effects of nonuniform efficiency across the central C_D phototube and of gain fluctuations in the tube were smaller with hydrogen than with deuterium. The lifetime measurement required that the counter efficiency for each sign of pion—not just the ratio of efficiencies as in the ratio measurement—be constant during the entire run. In one of the three runs with liquid hydrogen the efficiency was especially constant. Measurements were

made at two different times at all seven data positions, and the results were in good agreement in every case.

Because of the rate dependence of the gain of the C_D phototube, the lifetime could not be determined from a fit of the data to Eq. (1). The D/M ratios obeyed $R = A \exp(-Bx)[1 - Cf(x)]$. The term $Cf(x)$, a positive, monotonically increasing function of x, accounts for the rate dependence of the counter efficiency. Because the magnitude of the rate effect was not known precisely, C could not be specified. If it was a free parameter like A and B, however, the data could not determine the lifetime well. With liquid hydrogen as the Cerenkov medium, the rate dependence affected the π^+ efficiency more than the π^-. We greatly reduced the uncertainty in the lifetime by making a single fit which used both the π^+ and π^- data and assumed that π^+ and π^- have the same lifetime. The D/M ratio for π^- was expressed as

$$R_- = A_- \exp(-Bx)[1 - Cf(x)] \tag{2}$$

and for π^+ as

$$R_+ = A_+ \exp(-B\,x)[1 - rCf(x)]. \tag{3}$$

A single, least-squares fit to Eqs. (2) and (3) determined the four free parameters A_-, A_+, B, and C; parameter B is related to the lifetime in the same way as in Eq. (1). If the rate dependence were ignored by making separate fits of the π^+ and π^- data to Eq. (1), the resulting lifetimes would be shorter by 0.13 and 0.05 nsec, respectively.

The constant r is the ratio of the relative changes in π^+ and π^- efficiences for a given change in rate. Its value, 2.4, was deduced from the pulse-height spectra shown in Fig. 4. The efficiency

of the counter was proportional to the integral of the spectrum for pions satisfying the D coincidence (counting in the monitor and producing a pulse in C_D above the discrimination level). A decrease in gain corresponded to an increase in discrimination level and a smaller value for the integral. As can be seen in the figure, for a given increase in discrimination level, the relative change in π^+ efficiency was greater than that for π^-. The above expressions assume the relative change in gain varied with distance as $f(x)$. The form $1 - \exp(-Bx)$ was used, because the change in D/M from its value at $x = 0$ had this behavior. The form used for $f(x)$ was not critical because the rate varied by only a factor of two over the decay path and the effect of the variation was small. If $f(x) = x$ was used instead, the calculated lifetime changed by a negligible amount.

The only other important systematic error besides the rate effect was the counting of decay muons in C_D. Note that if a <u>constant fraction</u> of the C_D counts were due to decay muons there would be no error in the lifetime: The fitted values of $A_\pm$ would change, but not B. The number of pions which decayed a given distance upstream of the counter was proportional to the number of pions at that point. Thus, the fraction of counts due to muons would have been constant except for two factors. First, because of the finite distance between the monitor counters and the decay path, at upstream data positions fewer distant pion decays could send muons into C_D. Secondly, at upstream positions the anticoincidence counters were more effective in vetoing muons that entered C_D and could have counted. The variation along the decay path of the ratio of muons to pions entering C_D was

calculated from kinematics and counter geometry. The correction for decay muons reduced the calculated lifetime by 0.03 nsec.

Accidental coincidences were not significant in the measurement of the lifetime ratio or the absolute lifetime. The largest accidental rate was only 0.1%. Because the rate of accidental D or M coincidences was proportional to the true coincidence rate, D/M changed by some constant factor. As in the case of decay-muon counting, such a change does not affect the lifetime.

The D/M values for each scaler readout were corrected for decay muons and then fit to Eq. (2) or Eq. (3). After omitting data from DP7 and two individual points with unreasonably large deviations, there remained 331 points (a total of 130×10^6 M coincidences). The fit had a χ^2 of 316. The final result is $\tau = 26.02 \pm 0.04$ nsec. The statistical error was 0.031 nsec; systematic uncertainties in the velocity and in the correction for decay muons gave errors in τ of 0.023 and 0.015 nsec, respectively.

V. CONCLUSIONS

Table IV summarizes the most accurate recent determinations of the $\pi^+ - \pi^-$ lifetime ratio and of the lifetime itself. Our value for the ratio is the most precise and is consistent with other measurements. It is in agreement with the prediction of the CPT theorem or CP invariance. We conclude that earlier indications of a ratio different from unity are not significant.

If the strong interaction is invariant under CPT, then a particle and its antiparticle will have equal masses. Similarly, equality

of charges and gyromagnetic ratios checks CPT invariance of the electromagnetic interaction, and equality of lifetimes tests the decay interaction (usually weak). Some recent experimental tests of these predicted equalities are summarized in Table V. The various tests of CPT invariance are not equivalent, and their relative effectiveness depends upon the way in which CPT is broken. For example, Wolfenstein has shown that if the CPT-violating interaction conserves strangeness, the $K_1^0 - K_2^0$ mass difference is the most effective test, provided either C (and not T or P) or T (and not C or P) is also violated. The $\pi^+ - \pi^-$ lifetime difference is most effective if P(and not C or T) is violated.[11]

Our measurement of the lifetime of pions in flight is in good agreement with the two accurate measurements on stopping pions (the William and Mary and second Rochester experiments in Table IV). The expected time dilation of the observed lifetime agrees with the predicted value to 0.4% and provides the most precise verification of this aspect of special relativity. In the theory of Lundberg and Rédei a deviation from the expected velocity dependence of the lifetime measured in the laboratory system is interpreted as a violation of microcausality for distances less than some fundamental length. In their model the observed lifetime has the form $\gamma\tau[1 + (\alpha p/\hbar)^2/5]$, where τ is the proper lifetime, p is the pion momentum, and α is the fundamental length. Our value of the lifetime for pions in flight and the William and Mary measurement with stopping pions place an upper limit on α of 3×10^{-15} cm.

ACKNOWLEDGMENTS

We would like to express our appreciation to Professors A. Carl Helmholz and Burton J. Moyer for their support and encouragement throughout this work. We thank James Vale and the entire cyclotron staff for trouble-free machine operation. Particular thanks go to Lloyd B. Houser, Donald F. Rothfuss, and Louis A. Sylvia for their help with the design, installation, and smooth operation of the experimental equipment. We appreciate the assistance of Cordon R. Kerns with photomultiplier problems. The liquid-deuterium Cerenkov counters owe their success to Albert H. Kleid who assembled the flasks, Edwin F. McLaughlin and Richard V. Schafer who were responsible for the cryogenic design and operation of the counters, and Rene Bollaert, Russell F. Ellis, and Allan R. Susoeff of the hydrogen-target group, whose hard work kept both counters working properly. We are grateful to Dr. Richard J. Kurz for his help in the early stages of the design.

FOOTNOTES AND REFERENCES

*Work done under the auspices of the U. S. Atomic Energy Commission.

†Present address: Argonne National Laboratory, Argonne, Illinois.

‡On leave from the Physics Department, Tufts University, Medford, Mass.

§Present address: Department of Physics, University of California, Santa Barbara, California.

1. G. Lüders and B. Zumino, Phys. Rev. 106, 385 (1957).

2. Brief descriptions of this experiment are given by D. S. Ayres, A. M. Cormack, A. J. Greenberg, R. W. Kenney, D. O. Caldwell, V. B. Elings, W. P. Hesse, and R. J. Morrison, Phys. Rev. Letters 21, 261 (1968) and The Charged Pion Lifetime and a Limit on a Fundamental Length, Lawrence Radiation Laboratory Report UCRL-19276, Oct. 1969, submitted to Phys. Rev. Letters. More detailed accounts are provided by David S. Ayres, Comparison of π^+ and π^- Lifetimes as a Test of CPT Invariance (Ph. D. Thesis), Lawrence Radiation Laboratory Report UCRL-18369, Oct. 1968 (unpublished) and Arthur J. Greenberg, The Charged Pion Lifetime Measured in Flight (Ph. D. Thesis), Lawrence Radiation Laboratory Report UCRL-19300, August 1969 (unpublished).

3. R. C. Casella, Phys. Rev. Letters 21, 1128 (1968) and Phys. Rev. Letters 22, 554 (1969).

4. L-E. Lundberg and L. B. Rédei, Phys. Rev. 169, 1012 (1968).

5. M. Bardon, U. Dore, D. Dorfan, M. Krieger, L. Lederman, and E. Schwarz, Phys. Rev. Letters 16, 775 (1966).

6. F. Lobkowicz, A. C. Melissinos, Y. Nagashima, S. Tewksbury, H. von Briesen, Jr., and J. D. Fox, Phys. Rev. Letters 17, 548 (1966), and Precise Measurement of the K^+/K^- Lifetime Ratio, University of Rochester Report UR-875-272, April 1969, submitted to Phys. Rev. The earlier report of the experiment by Lobkowicz et al. included an additional value for $\tau(\pi^+)/\tau(\pi^-)$ of 1.0040±0.0018, obtained by a different weighting of the data.

7. D. S. Ayres, D. O. Caldwell, A. J. Greenberg, R. W. Kenney, R. J. Kurz, and B. F. Stearns, Phys. Letters 24B, 483 (1967) and Phys. Rev. 157, 1288 (1967).

8. D. S. Ayres, A. M. Cormack, A. J. Greenberg, R. W. Kenney, E. F. McLaughlin, R. V. Schafer, D. O. Caldwell, V. B. Elings, W. P. Hesse, and R. J. Morrison, Nucl. Instr. Methods 70, 13 (1969).

9. D. S. Ayres, A. M. Cormack, A. J. Greenberg, R. W. Kenney, D. O. Caldwell, V. B. Elings, W. P. Hesse, and R. J. Morrison, Physica 43, 105 (1969).

10. Robert E. Shafer, Phys. Rev. 163, 1451 (1967).

11. L. Wolfenstein, Nuovo Cimento 63A, 269 (1969).

Table I. Some of the coincidences scaled during data taking.

Coincidence[a]	Significance
$M_1M_2M_3M_4\bar{A}_1 \equiv B$	beam particles
$B\overline{\Sigma A}$	particles in B coincidence passing through holes in A_2 to A_6
$B\overline{\Sigma A}\,\bar{A}_e \equiv T$	particles in $B\overline{\Sigma A}$ which are not electrons
$T\,C_M\bar{A}_M \equiv M$	pion monitor
$M\,C_D\bar{A}_D \equiv D$	surviving pions
$B\overline{\Sigma A}\,A_e \equiv S$	beam electrons
$B\overline{\Sigma A}\,A_e\,C_D\bar{A}_D \equiv X$	electrons counted by C_D
$T\,\bar{C}_M \equiv L$	beam muons
$T\,\bar{C}_M C_D\bar{A}_D \equiv V$	beam muons counted by C_D
$T\,C_D\bar{A}_D$	D coincidence without $C_M\bar{A}_M$
DM_5	D coincidence with M_5

[a] A bar over a symbol means anticoincidence. $\overline{\Sigma A} \equiv \bar{A}_2\bar{A}_3\bar{A}_4\bar{A}_5\bar{A}_6$.

Table II. $\pi^+ - \pi^-$ comparisons of $\eta = \beta(1-\beta^2)^{-1/2}$ and of the momentum p.

$(\eta_+ - \eta_-)/\eta$ from momentum-response curves	
$(-1 \pm 2) \times 10^{-4}$	hydrogen in C_M
$(-2 \pm 2) \times 10^{-4}$	hydrogen in C_D
$(2 \pm 4) \times 10^{-4}$	deuterium in C_D; measured during data runs
$(-2 \pm 1) \times 10^{-4}$	deuterium in C_D; measured during data runs
$(-2 \pm 1) \times 10^{-4}$	deuterium in C_D; measured during data runs
$(-4 \pm 1) \times 10^{-4}$	deuterium in C_D; C_M out of beam
$(\eta_+ - \eta_-)/\eta$ measured by time of flight	
$(-1 \pm 3) \times 10^{-4}$	
$(p_+ - p_-)/p$ measured with magnetic spectrometer	
$(1 \pm 4) \times 10^{-4}$	

Table III. Data used in the weighted average for the lifetime ratio.

Run	No. points fitted	$(\tau_+ - \tau_-)/\tau$ (raw data) (10^{-3})	χ^2/d for fit	Lat. slope uncert. (10^{-3})	$(\tau_+ - \tau_-)/\tau$ (corrected) (10^{-3})
1	78	2.45 ± 1.40	1.04	0.33	2.16 ± 1.50
2	88	-0.11 ± 0.86	1.09	0.28	-0.11 ± 0.99
3	62	0.48 ± 1.18	1.18	0.41	0.48 ± 1.39

Table IV. Recent measurements of the charged pion lifetime and the π^+/π^- lifetime ratio.

Experiment	τ (nsec)	$\tau(\pi^+)/\tau(\pi^-)$
William and Mary (1965)[a]	26.02 ±0.04	---
Rochester I (1966)[b]	26.40 ±0.08	---
Rochester II (1967)[c]	26.04 ±0.05	---
Serpukhov (1966)[d]	25.9 ±0.3	---
Columbia (1966)[e]	25.6 ±0.3	1.004 ±0.007
Rochester-Brookhaven (1966)[c]	26.67 ±0.24	1.0023 ±0.0040
Dubna (1968)[g]	24.8 ±0.4	0.9986 ±0.0029
Berkeley-Santa Barbara I (1967)[h]	26.6 ±0.2	1.0056 ±0.0028
Berkeley-Santa Barbara II (1968)[i]	26.02 ±0.04	1.00055±0.00071

a. M. Eckhause, R. J. Harris, Jr., W. B. Shuler, R. T. Siegel, and R. E. Welsh, Phys. Letters 19, 348 (1965). The value quoted above differs from the published value in accordance with a communication to A. H. Rosenfeld.

b. K. F. Kinsey, F. Lobkowicz, and M. E. Nordberg, Jr., Phys. Rev. 144, 1132 (1966).

c. M. E. Nordberg Jr., F. Lobkowicz, and R. L. Burman, Phys. Letters 24B, 594 (1967). This result supersedes that of the earlier experiment.

d. A. F. Dunaitsev, V. M. Kutyin, Yu. D. Prokoshkin, E. A. Rasuvaev, and Yu. N. Simonov, Phys. Letters 23, 283 (1966).

e. See Ref. 5.

f. See Ref. 6.

g. V. I. Petrukhin, V. I. Rykalin, D. M. Khazins, and Z. Cisek, Comparison of the Life-Times of the Charged Pions, Joint Institute for Nuclear Research, Dubna, USSR, Report JINR-P1-3862 (1968); submitted to Yad. Fiz. [Sov. J. Nucl. Phys.].

h. See Ref. 7.

i. This experiment.

Table V. Experimental checks of CPT invariance.

Quantity measured	Result	Footnote
	Equality of Masses	
$m(\pi^+)/m(\pi^-)$	1.0002 ± 0.0004	a
	1.0002 ± 0.0005	b
$m(\bar{p})/m(p)$	1.008 ± 0.005	c
$m(e^-)/m(e^+)$	1.000101 ± 0.000185	d
$1 - m(\bar{K}^0)/m(K^0)$	$\leq 2 \times 10^{-16}$	e
	Equality of Gyromagnetic Ratios	
$1/2(g_{e^+} - g_{e^-})$	$(1.5 \pm 2)\alpha^2/\pi^2$	f
$1/2(g_{\mu^+} - g_{\mu^-})$	$(-0.09 \pm 0.14)\alpha^2/\pi^2$	g
	Equality of Total Lifetimes	
$\tau(\mu^+)/\tau(\mu^-)$	1.000 ± 0.001	h
$\tau(K^+)/\tau(K^-)$	0.99910 ± 0.00078	i
$\tau(\pi^+)/\tau(\pi^-)$	1.00055 ± 0.00071	b

a. See Ref. 10.

b. This experiment.

c. V. T. Cocconi, T. Fazzini, G. Fidecaro, M. Legros, N. H. Lipman, and A. W. Merrison, Phys. Rev. Letters 5, 19 (1960).

d. D. E. Muller, H. C. Hoyt, D. J. Klein, and J. W. M. DuMond, Phys. Rev. 88, 775 (1952).

e. V. L. Fitch, in Proceedings of the XIIIth International Conference on High Energy Physics (University of California Press, Berkeley and Los Angeles, 1967), p. 63.

f. A. Rich and H. R. Crane, Phys. Rev. Letters 17, 271 (1966).

g. J. Bailey, W. Bartl, G. Von Bochmann, R. C. A. Brown, F. J. M. Farley, H. Jöstlein, E. Picasso, and R. W. Williams, Phys. Letters 28B, 287 (1968). These authors give the result : $1/2(g_{\mu^+} - g_{\mu^-}) = (-5.0 \pm 7.5) \times 10^{-7}$, which is equivalent to the number quoted above. The stated uncertainty is statistical, and has not been increased to allow for possible systematic errors.

h. S. L. Meyer, E. W. Anderson, E. Bleser, L. M. Lederman, J. L. Rosen, J. Rothberg, and I-T. Wang, Phys. Rev. 132, 2693 (1963).

i. See Ref. 6.

FIGURE CAPTIONS

Fig. 1. Beam layout. EPB: 732-MeV external proton beam of the 184-inch cyclotron. SIC: split ion chamber. SEM: secondary-emission monitor. NMR probes: nuclear-magnetic-resonance probes. M_1 to M_4: 0.07-in.-thick scintillation counters. A_1 to A_6: scintillation anticoincidence counters. A_e: electron veto counter. C_M and C_D: focusing Cerenkov counters.

Fig. 2. Monitor Cerenkov counter C_M (plan view).

Fig. 3. Movable Cerenkov counter C_D (side view). This counter is basically a larger version of C_M.

Fig. 4. Pulse-height distributions for the central photomultiplier of C_D when the counter was filled with liquid hydrogen. For each sign of pion the solid curve is the spectrum for those C_D pulses in coincidence with a count in the monitor and above the C_D discrimination level. The dotted lines show the spectrum obtained if the second requirement is omitted. The two distributions are normalized to the same number of monitor counts.

Fig. 5. Schematic diagram of the absorption detector. The absorber was a 2.8-in.-thick block of aluminum.

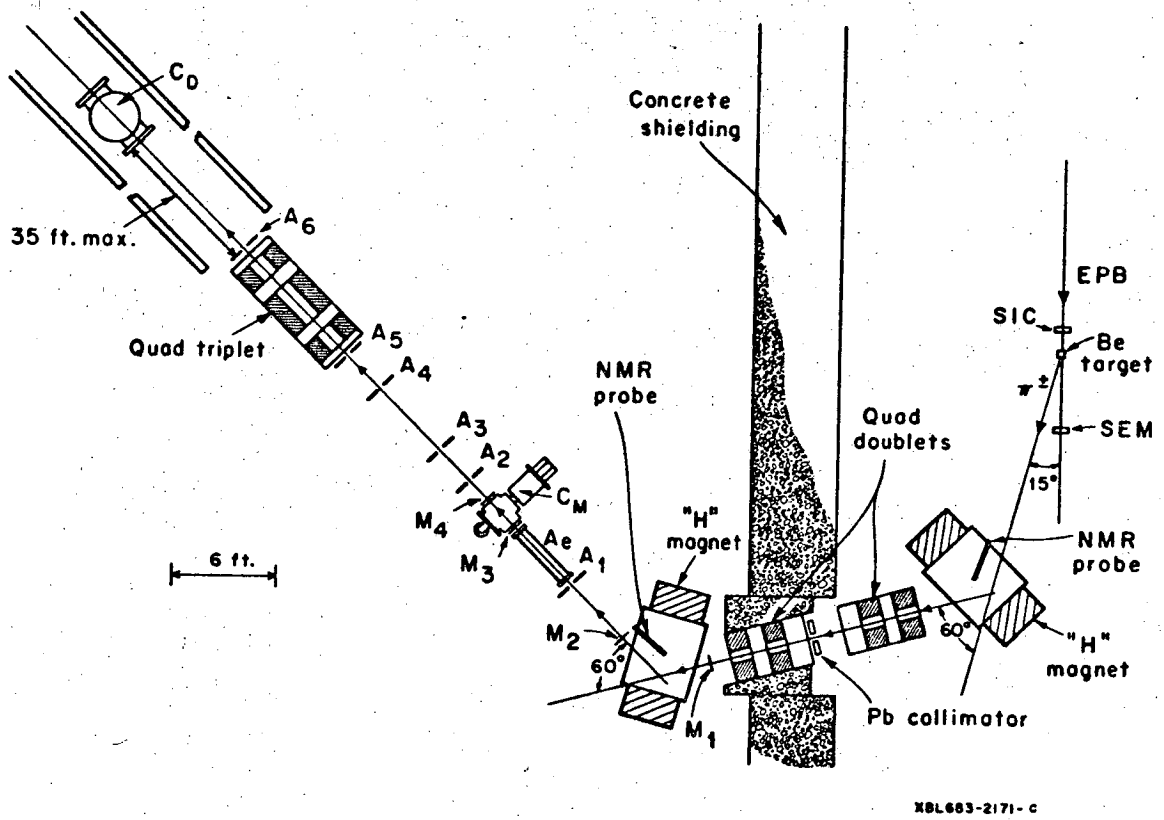
C_D
35 ft. max.
A_6
Quad triplet
A_5
A_4
A_3
A_2
C_M
M_4
A_e
A_1
M_3
6 ft.
M_2
60°
M_1
NMR probe
"H" magnet
Concrete shielding
Quad doublets
Pb collimator
EPB
SIC
Be target
$\pi^{\pm}$
SEM
15°
NMR probe
60°
"H" magnet
XBL683-2171-C

Fig. 1

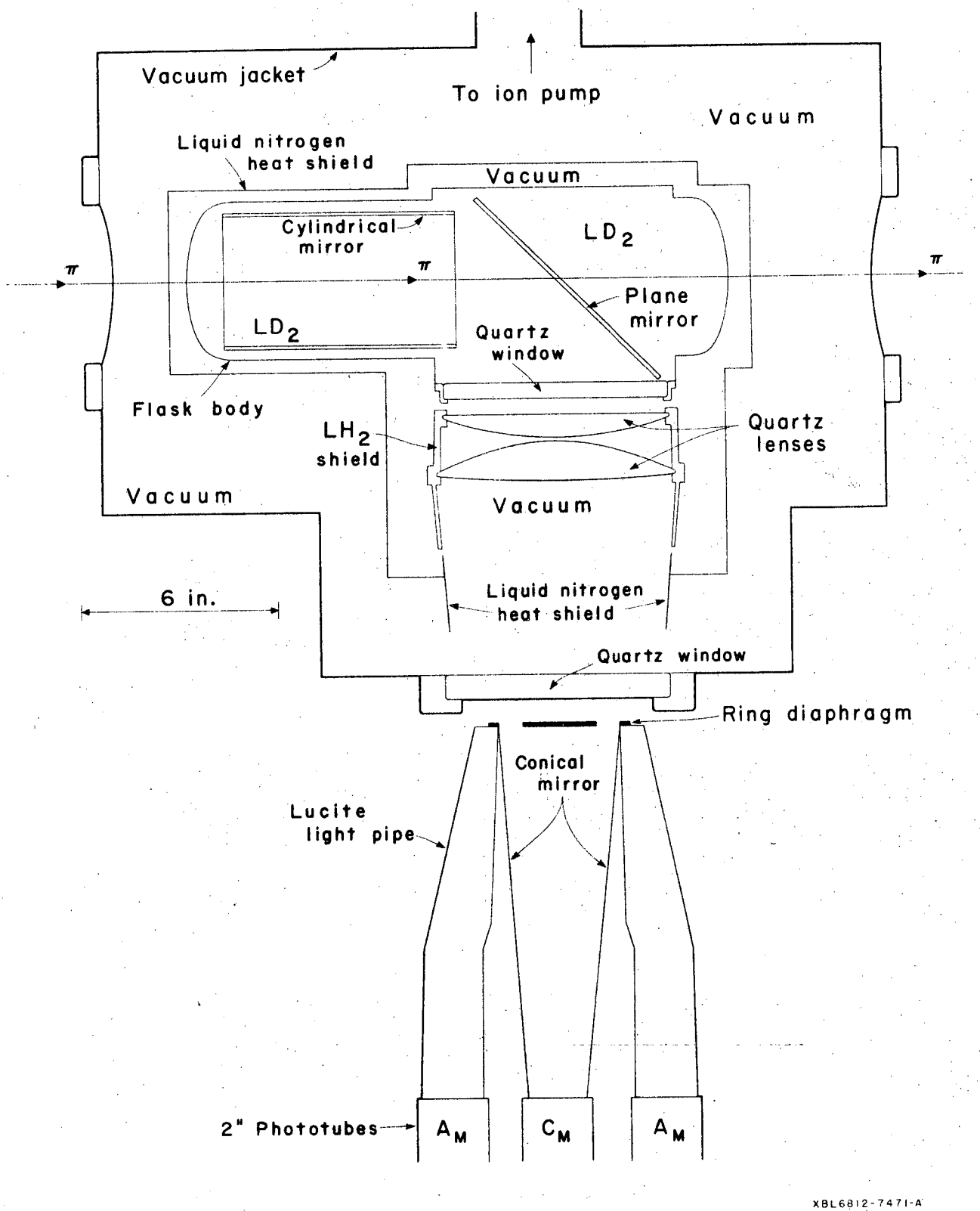
Vacuum jacket
To ion pump
Vacuum
Liquid nitrogen heat shield
Vacuum
Cylindrical mirror
LD2
π
π
π
Plane mirror
LD2
Quartz window
Flask body
LH2 shield
Quartz lenses
Vacuum
Vacuum
6 in.
Liquid nitrogen heat shield
Quartz window
Ring diaphragm
Conical mirror
Lucite light pipe
2" Phototubes
AM
CM
AM
XBL6812-7471-A

Fig. 2

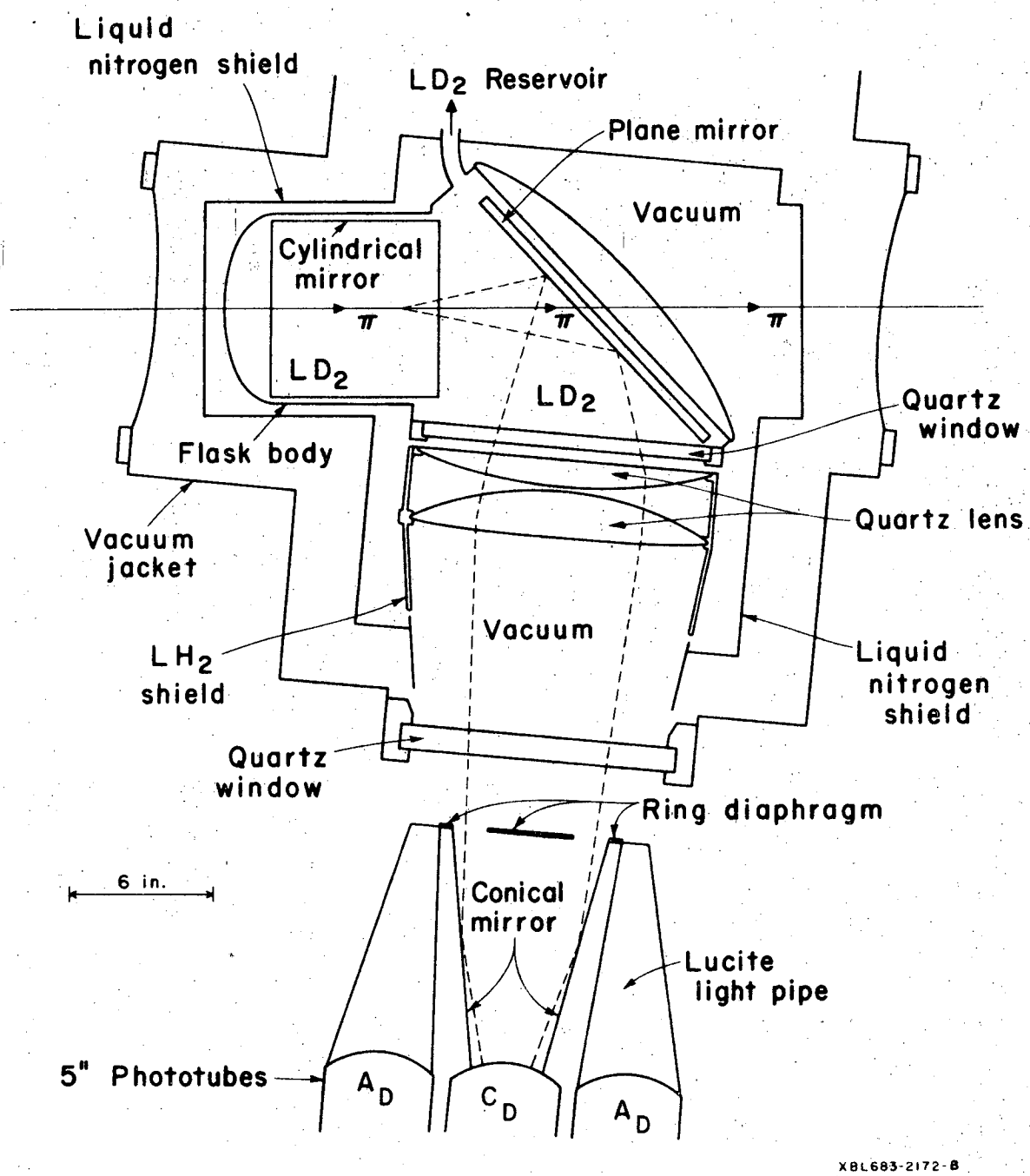
Liquid
nitrogen shield
LD2 Reservoir
Plane mirror
Vacuum
Cylindrical
mirror
π
π
π
LD2
LD2
Quartz
window
Flask body
Quartz lens
Vacuum
jacket
Vacuum
LH2
shield
Liquid
nitrogen
shield
Quartz
window
Ring diaphragm
6 in.
Conical
mirror
Lucite
light pipe
5" Phototubes
AD
CD
AD
XBL683-2172-B

Fig. 3

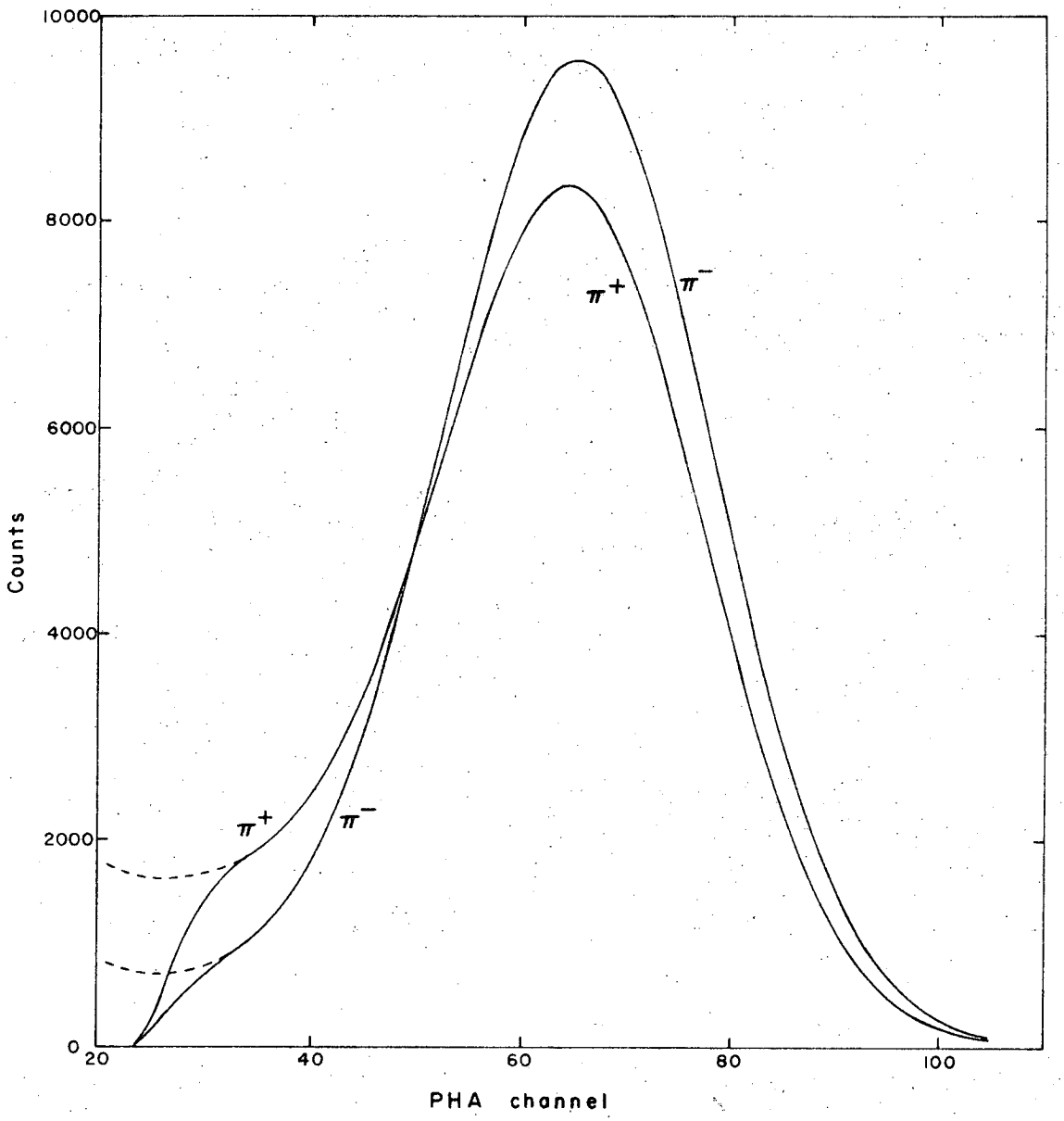

XBL 694-374

Fig. 4

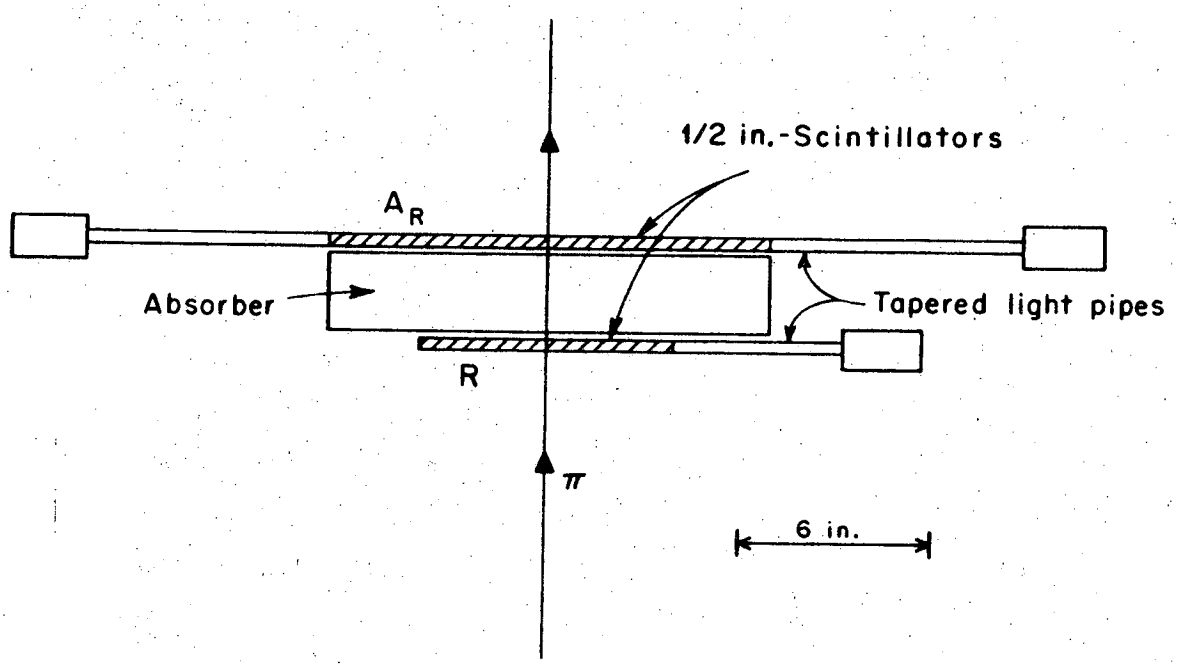

XBL687-3446-A

Fig. 5

LEGAL NOTICE

This report was prepared as an account of Government sponsored work. Neither the United States, nor the Commission, nor any person acting on behalf of the Commission:

A. Makes any warranty or representation, expressed or implied, with respect to the accuracy, completeness, or usefulness of the information contained in this report, or that the use of any information, apparatus, method, or process disclosed in this report may not infringe privately owned rights; or

B. Assumes any liabilities with respect to the use of, or for damages resulting from the use of any information, apparatus, method, or process disclosed in this report.

As used in the above, "person acting on behalf of the Commission" includes any employee or contractor of the Commission, or employee of such contractor, to the extent that such employee or contractor of the Commission, or employee of such contractor prepares, disseminates, or provides access to, any information pursuant to his employment or contract with the Commission, or his employment with such contractor.

TECHNICAL INFORMATION DIVISION
LAWRENCE RADIATION LABORATORY
UNIVERSITY OF CALIFORNIA
BERKELEY, CALIFORNIA 94720