UCRL-1[illegible]

UNIVERSITY OF CALIFORNIA — BERKELEY

TWO-WEEK LOAN COPY

*This is a Library Circulating Copy which may be borrowed for two weeks. For a personal retention copy, call Tech. Info. Division, Ext. 5545*

# RADIATION LABORATORY

## DISCLAIMER

This document was prepared as an account of work sponsored by the United States Government. While this document is believed to contain correct information, neither the United States Government nor any agency thereof, nor the Regents of the University of California, nor any of their employees, makes any warranty, express or implied, or assumes any legal responsibility for the accuracy, completeness, or usefulness of any information, apparatus, product, or process disclosed, or represents that its use would not infringe privately owned rights. Reference herein to any specific commercial product, process, or service by its trade name, trademark, manufacturer, or otherwise, does not necessarily constitute or imply its endorsement, recommendation, or favoring by the United States Government or any agency thereof, or the Regents of the University of California. The views and opinions of authors expressed herein do not necessarily state or reflect those of the United States Government or any agency thereof or the Regents of the University of California.

UCRL-1929
Unclassified-Instrumentation
Distribution

UNIVERSITY OF CALIFORNIA

Radiation Laboratory

Contract No. W-7405-eng-48

# DESIGN OF RADIATION HEATED CATHODES FOR ION PUMPS

W. E. Bush

October 9, 1952

Berkeley, California

UCRL-1929
Unclassified-Instrumentation
Distribution

# DESIGN OF RADIATION HEATED CATHODES FOR ION PUMPS

W. E. Bush

Radiation Laboratory, Department of Physics,
University of California, Berkeley, California

October 9, 1952

## ABSTRACT

The systematic development of radiation heated cathodes for ion pumps is presented.

The cathode described consists of a tantalum or tungsten disk, which acts as an emitter, heated by a suitable filament contained in a heat shielding can of appropriate design.

UCRL-1929
Unclassified-Instrumentation
Distribution

# DESIGN OF RADIATION HEATED CATHODES FOR ION PUMPS

W. E. Bush

Radiation Laboratory, Department of Physics,
University of California, Berkeley, California

October 9, 1952

## Introduction

With the development of ion pumps[1] at the University of California Radiation Laboratory has arisen the usual problems involved with the production of electron emitting cathodes which will have reasonable long life despite heavy positive ion bombardment. The first approaches made to the problem consisted of the use of heavy filaments which could be run in the positive ion stream. These were made large enough (1/4" dia.) to make the running time feasibly long. While operating times of sixty or seventy hours are sometimes obtained by such means, the time is still too short to make the use of such devices feasible in a high vacuum pump.

The present ion pumps call for a cathode which will produce an electron current in excess of twenty amperes and present an emitting surface of 2-1/2 to 3 inches in diameter. Since large spiral filaments soon develop hot spots due to erosion, it was early felt that a radiantly heated emitting disk would probably produce a less fragile system. This was tried and while other problems existed, the feasibility was demonstrated.[2]

The systematic development of such cathodes is the subject of this report.

The cathodes herein described consist of a tantalum or tungsten disk about three inches in diameter which acts as an emitter. This is heated by a suitable filament which is contained in a heat shielding can of design appropriate to the geometry of the pump (Figs. 1 and 2).

Power Requirements

Power is dissipated in the cathode in the following ways.

1. Radiation from the Front Surfaces of the Emitting Plate. This power can be estimated upon the basis of the working temperature of the plate. Fig. 3 shows temperature versus the emission for tungsten and tantalum.

Since the working area is about 45 $cm^2$ (three inch dia.) and at least 20 amperes is required, it would appear that the temperatures required would be 2325° K. for tantalum, and 2550° K. for tungsten.

While tantalum appears to have considerable advantage over tungsten it is well known that poisoning seriously effects this value and the chances of low contamination in a cathode operating in an arc discharge at gas pressures of near half a micron are not good. Hence the initial design was based upon an operating temperature of 2500° K., even though tantalum was used.

Assuming an emissivity of 0.35 the power required to maintain this temperature on the front surface is

$$P_1 = A\epsilon\sigma T^4 \quad \text{(approx.)}$$
$$= \underline{3.53 \times 10^3 \text{ watts}}.$$

2. The Heat Shields. The effect of heat shields can be calculated by suitable application of the Steffan-Boltzman law. It is well to briefly consider the mechanism of the shields since it dictates the nature of

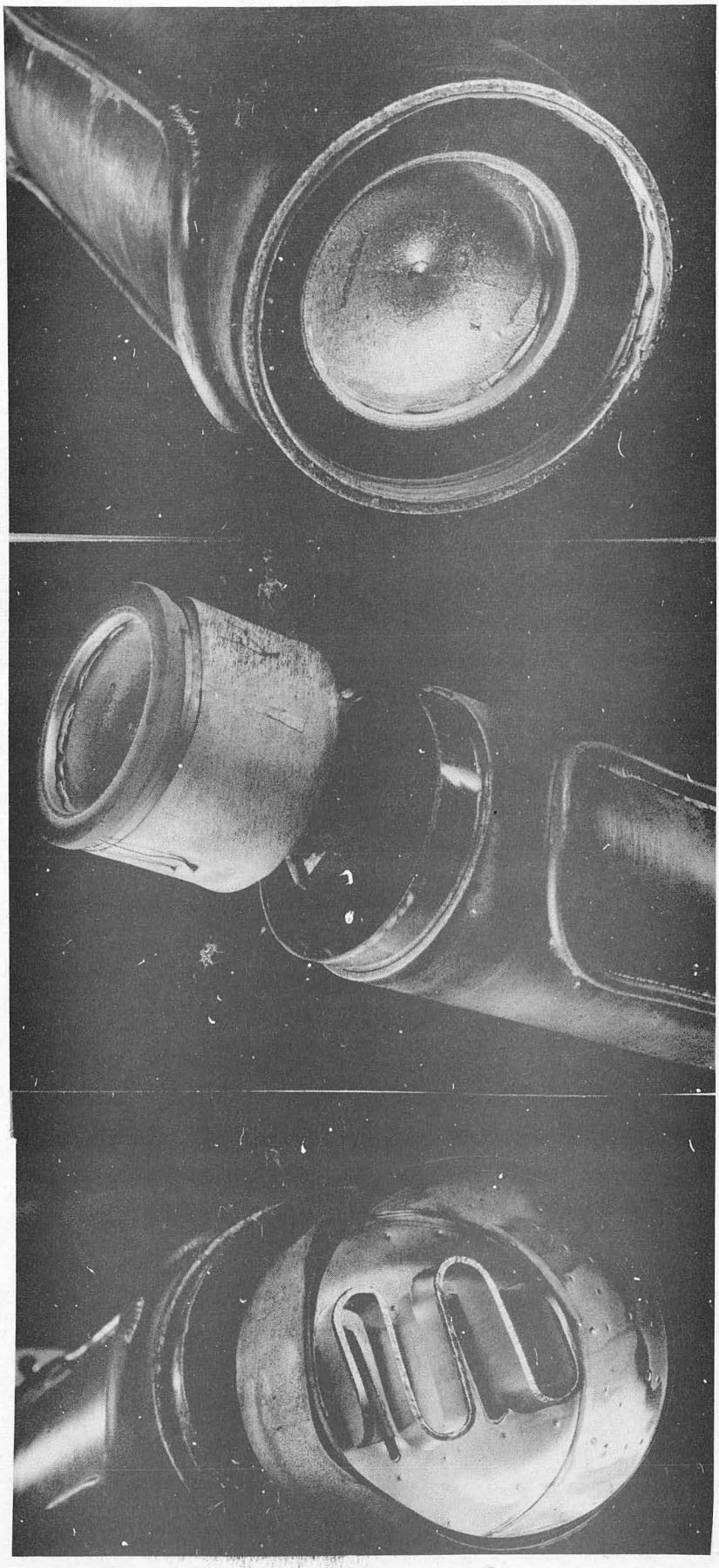

ZN-426

Fig. 1

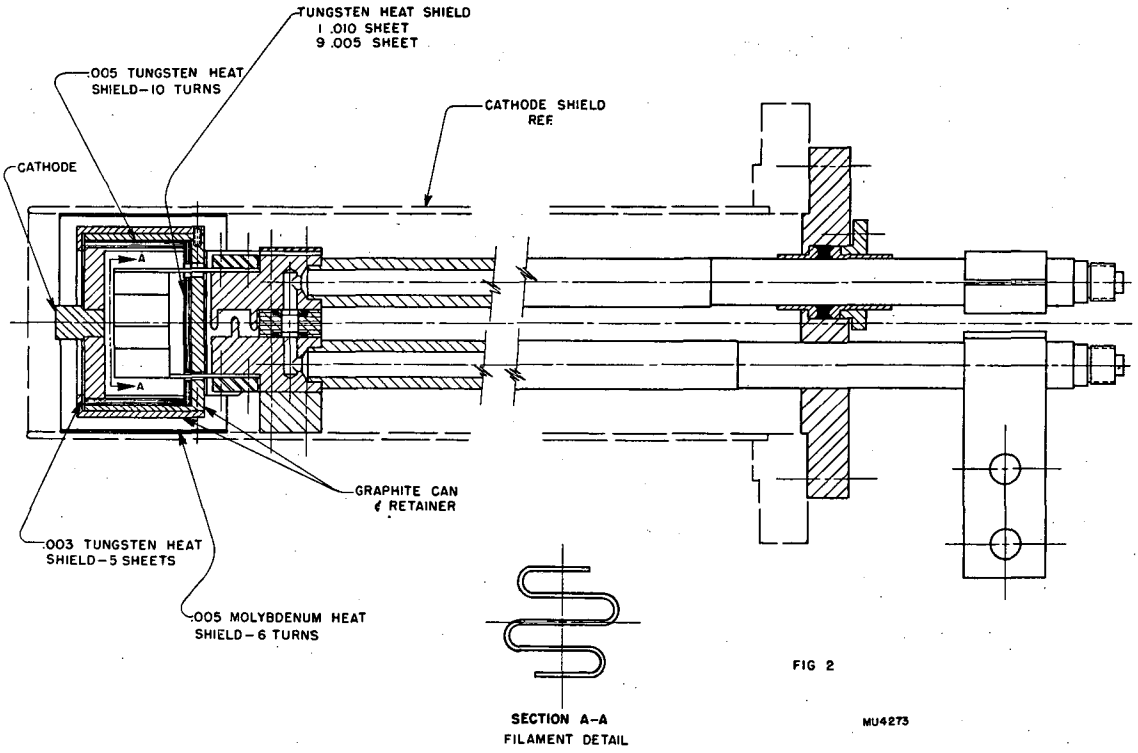
TUNGSTEN HEAT SHIELD
1 .010 SHEET
9 .005 SHEET
.005 TUNGSTEN HEAT SHIELD-10 TURNS
CATHODE SHIELD REF
CATHODE
A
A
GRAPHITE CAN & RETAINER
.003 TUNGSTEN HEAT SHIELD-5 SHEETS
.005 MOLYBDENUM HEAT SHIELD-6 TURNS
SECTION A-A
FILAMENT DETAIL
MU4273

FIG 2

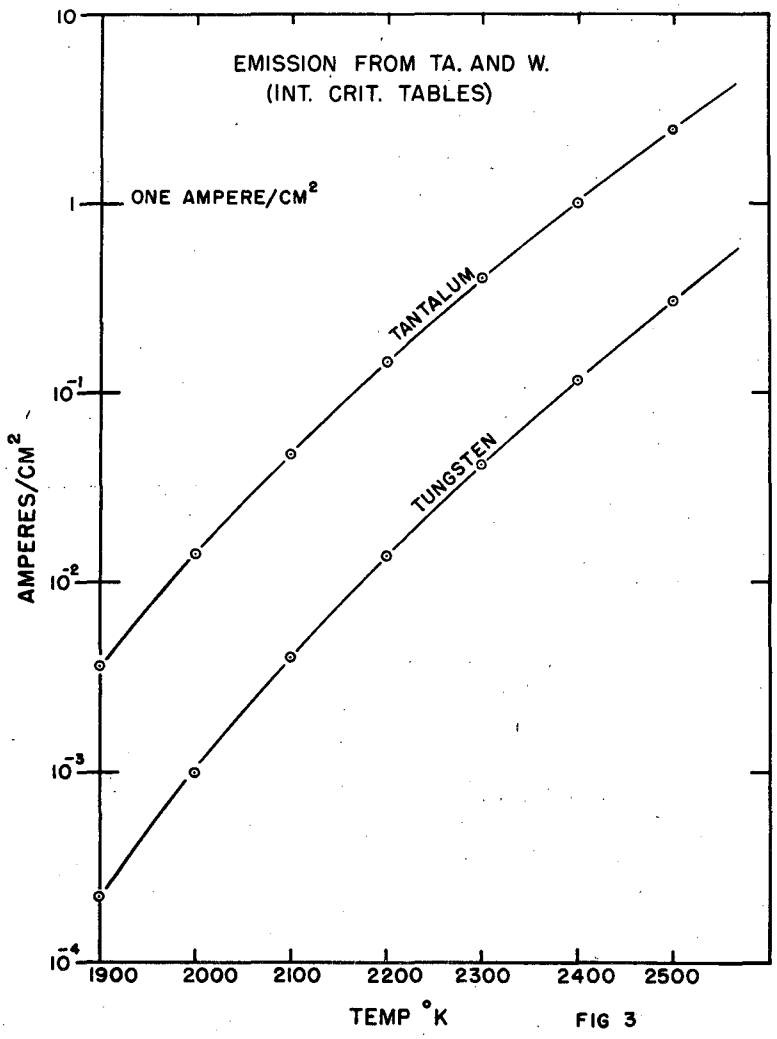
EMISSION FROM TA. AND W.
(INT. CRIT. TABLES)
ONE AMPERE/CM²
TANTALUM
TUNGSTEN
AMPERES/CM²
10
1
10⁻¹
10⁻²
10⁻³
10⁻⁴
1900
2000
2100
2200
2300
2400
2500
TEMP °K

FIG 3

MU 4274

their requirements. Fig. 4 illustrates the situation that exists when two parallel infinite planes are held at temperatures $T_1$ and $T_2$ when the emissivities are $\epsilon_1$ and $\epsilon_2$ respectively. The total heat transfer from the one surface through the other is the summation of all the primary and reflected radiation.

Thus all of the heat that leaves $T_1$ per unit area is given by:

$$Q_1 = \sigma\epsilon_1 T_1^4 \left[1 + (1-\epsilon_1)(1-\epsilon_2) + (1-\epsilon_1)^2(1-\epsilon_2)^2 + \cdots\cdots\right.$$
$$+ \sigma\epsilon_2 T_2^4 (1-\epsilon_1) \left[1 + (1-\epsilon_1)(1-\epsilon_2) + (1-\epsilon_1)^2(1-\epsilon_2)^2 + \cdots\right.$$

and all that arrives is

$$Q_2 = \sigma\epsilon_1 T_1^4 (1-\epsilon_2) \left[1 + (1-\epsilon_1)(1-\epsilon_2) + (1-\epsilon_1)^2(1-\epsilon_2)^2 + \cdots\cdots\right.$$
$$+ \sigma\epsilon_2 T_2^4 \left[1 + (1-\epsilon_1)(1-\epsilon_2) + (1-\epsilon_1)^2(1-\epsilon_2)^2 + \cdots\cdots\right.$$

The net flux then is the amount leaving minus the amount arriving, or,

$$\frac{Q}{A} = Q_1 - Q_2$$

These series can be summed to yield the result[3]

$$\frac{Q}{A} = \frac{\sigma}{\frac{1}{\epsilon_1} + \frac{1}{\epsilon_2} - 1} (T_1^4 - T_2^4)$$

If a series of n heat shields are introduced and the emissivities of all surface are the same, the heat transfer is reduced to

$$Qn = \frac{1}{n+1} Q$$

where Q is the heat transfer to be expected between the initial surfaces if no heat shields are used. Thus a reduction of heat transfer to 10 percent of the non-shielded value dictates the use of 9 heat shields.

Upon this basis the losses through a suitable can was calculated. The radiating area of the can used is about 93 $cm^2$. Presuming the inside to be at the same temperature as the cathode surface (2500° K) and that

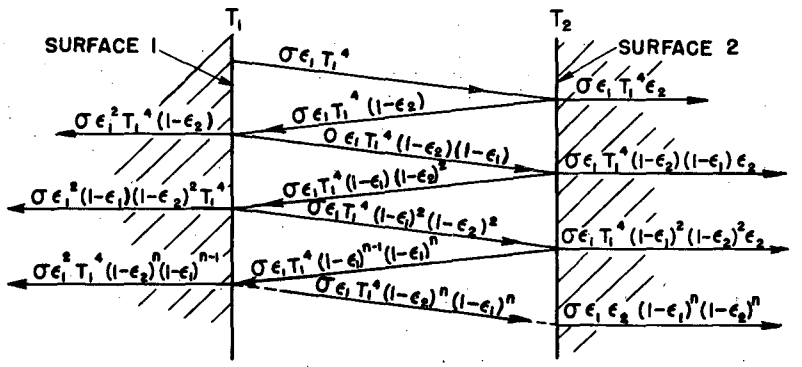


HEAT TRANSFER DUE TO THE TEMPERATURE ($T_1$) OF SURFACE #1

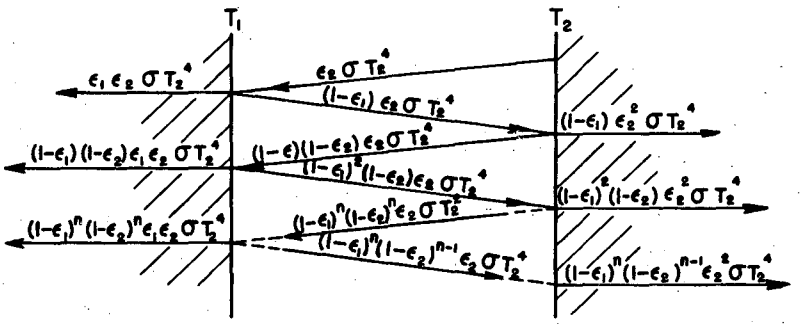


HEAT TRANSFER DUE TO THE TEMPERATURE ($T_2$) OF SURFACE #2

FIG 4

MU4275

the average emissivity of the sheet tungsten surfaces is 0.3, the heat loss, using ten shields is

$$P_2 = 570 \text{ watts (approx.)}$$

3. Heat Loss Through Holes in the Shielding. Since the filament stems must pass through the heat shields and one stem must pass through with adequate clearance for electrical insulation, a certain loss is unavoidable. In the case in point, the stem passed through a slot 1/4 in. wide and 1-1/4 in. long. The open area is approximately 1-1/2 $cm^2$. This area acts approximately as a black body operating at the temperature of the inside of the furnace itself. Some reflection from the filament clamp occurs, but is not easily estimated. The power loss through the hole will be in the order of

$$P_3 = 335 \text{ watts.}$$

4. Heat Loss by Conduction in the Filament Legs. There is always a certain power loss due to conduction through the filament legs to the water cooled clamp stems.[4] This is small compared to other losses and has not been specifically considered.

From the foregoing consideration the power required for the cathode described may be totaled.

| | |
|---|---|
| Emissive face..... | 3,530 watts |
| Shielding loss..... | 570 watts |
| Leakage due to holes..... | 335 watts |
| Total | 4,435 watts |

Filament Design

Upon the basis of this power requirement (5 KW approx.) a filament can be designed which will involve a specified temperature difference

between the filament and the cathode surface temperature.

Since the indicated furnace temperature is 2500° K. a filament temperature of 3000° K. was selected as being as high as feasible from the standpoint of filament life and as low as possible in view of the area requirement. In principle, the required radiating area of the filament can be determined. Actually this cannot be determined unless the geometry of the filament and walls are taken into consideration,[3] but it appeared that in the case of large coiled filaments or flat sheet designs in which the area involved with filament was in the order of one third that of the inner shield, the relation was close to that of one spherical surface within another. For this situation the heat transfer is given by the relation

$$Q = \frac{\sigma A_1}{\frac{1}{\epsilon_1} + \frac{A_1}{A_2}\left(\frac{1}{\epsilon_2} - 1\right)} \left(T_1^4 - T_2^4\right)$$

where $A_1$ is the area of the inner sphere and $A_2$ is the area of the outer sphere. Upon the basis of a relative effective area of filament as being about one third that of the surface it sees, then in the present case

$$Q = \frac{5.73 \times 10^{-12} \left(3^4 - 2.5^4\right) \times 10^{12}}{\frac{1}{0.35} + \frac{1}{3}\left(\frac{1}{0.35} - 1\right)} = 69 \text{ watts/cm}^2$$

or 14.5 $cm^2$ per KW of power required.

A flat ribbon filament was designed, the effective surface of which was 77 $cm^2$ before bending. This surface is undoubtedly reduced in effect as soon as bending occurs so that radiating areas face each other and the solid angle exposed to the cooler shields is diminished. The filament rating without correction is 5,300 watts at the 500° C differential.

Experience with the filament indicates that at power input greater than about 5.5 KW it is quickly damaged.

Upon the basis of the foregoing information such a cathode was built using a tantalum emitting plate and operated for a period of 336 hours, whereupon it was turned off while still operable. The photograph (Fig. 1) shows the condition of the parts after the run.

## Operation

Actual operation involved net power input to the filament varying from as little as 3600 watts to as high at 5500 watts. Part of this variation stems from the fact that a certain and variable amount of energy is received by the arc itself. More important, however, appears to be the variations from time to time of the electron emission characteristics of the tantalum surface.

## Temperature of Cathode

Since the required power consumed appeared to be approximately that predicted for the 2500° K. operation even though it had been hoped that operation would be obtained at about 2330° K. some question was raised as to whether the discrepancy resulted from the tantalum actually requiring higher than predicted temperatures or due to failure of the heat shielding. In order to settle this question, temperature measurements were made upon the cathode surface with an optical pyrometer. The results are shown in Fig. 5. It will be noted that the observed power input for a front surface temperature of 2500° K. was 4300 watts while that calculated in the foregoing pages was 4435 watts.

This evidence supports the view that under the conditions of the

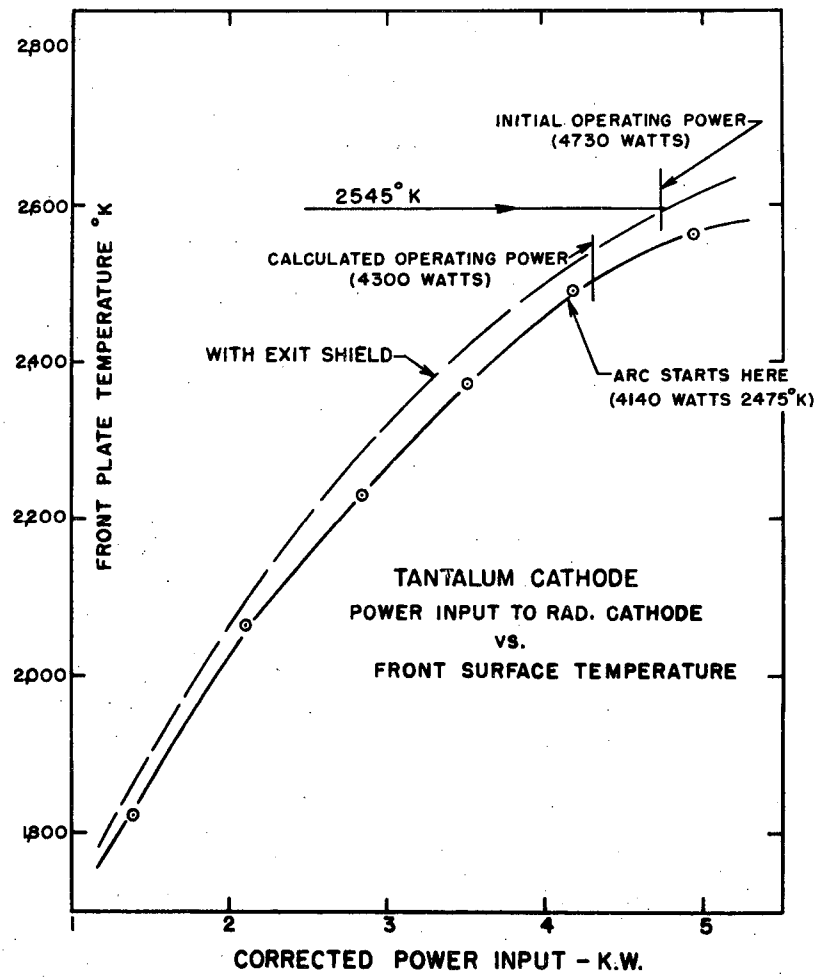
2800
2600
2400
2200
2000
1800
FRONT PLATE TEMPERATURE °K
INITIAL OPERATING POWER
(4730 WATTS)
2545° K
CALCULATED OPERATING POWER
(4300 WATTS)
WITH EXIT SHIELD
ARC STARTS HERE
(4140 WATTS 2475°K)
TANTALUM CATHODE
POWER INPUT TO RAD. CATHODE
VS.
FRONT SURFACE TEMPERATURE
1
2
3
4
5
CORRECTED POWER INPUT - K.W.

FIG 5

MU4276

arc operation, surface contamination is usually such that tantalum is not much better than tungsten as an electron emitter. Further investigation of this point has been carried on through the substitution of a tungsten plate for the tantalum. As indicated in Fig. 3, the requisite electron current (0.5 amps/$cm^2$) should be obtained at about 2550° K. and according to the results shown in Fig. 5 (the emissivity of Ta and W are very nearly the same) the power required is about 4800 watts. Actual operation has shown that in the case of tungsten, for average arc conditions, (12 amps at 340 volts) the filament power required is about 4500 watts with a maximum recorded during any phase of starting as 5100 watts. This compares with an average value of 4100 watts and a maximum of 5460 watts in the case of tantalum.

According to this information it is to be presumed that the tungsten plate operates at about 2575° K. while the tantalum must at times be raised to as high as about 2610° K.

## The Thickness of the Emitter Plate

Experience with the ion pump arc has indicated that under suitable operating conditions an erosion rate of about 0.75 grams of Ta or W per hour can be expected. Thus the life of the emitting plate is determined essentially by its thickness. Thus in order to obtain the run of 336 hours a tantalum plate having a thickness of 3/8 inch was used. In addition to this it had a button in its center as shown in Fig. 6. This button was nearly gone at the end of the run, but apparently had had considerable effect in lengthening the useful life of the plate.

As the thickness of the plate is increased the question of temperature drop through the plate becomes important.

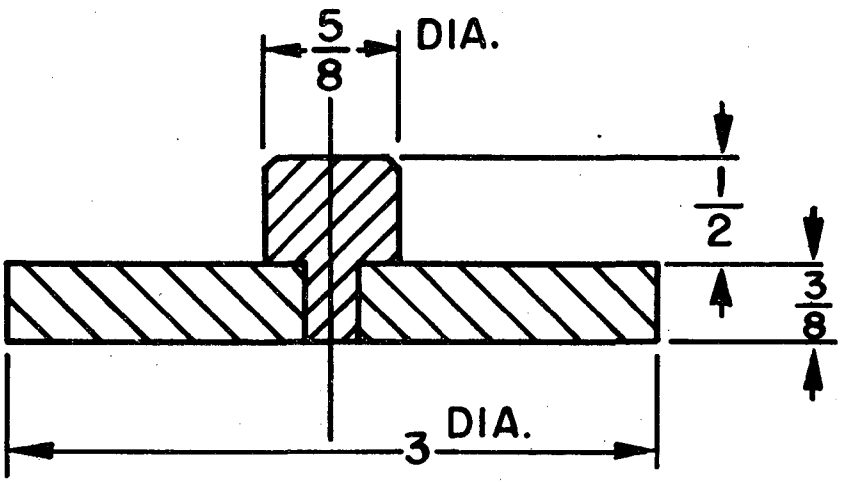


FIG 6

MU4277

An approximate calculation will give a notion as to the importance of this matter. Since the specific conductivity of the tantalum is about 0.73 watts/cm/°C the temperature drop through the plate is

$$\Delta t = \frac{\text{watts/cm}^2}{0.73} \ {}^{\circ}\text{C/cm}$$

and since the heat radiated from the disk is about 100 watts/cm$^2$

$$\Delta t = \frac{100}{0.73}$$

$$= 130^{\circ}\text{C/cm}.$$

Thus the heat transfer from filament to the emitting disk takes place at a higher temperature than calculated by about 130°C which means that the filament has to run at about 3100° K instead of 3000° K. At temperatures as high as this, the life of the filament is seriously impaired. For the particular design of cathode so far described it would appear that the maximum thickness feasible will be about 1-1/2 cm in which case the probable life is 500 hours. It has been proposed (and as a matter of fact, tried) that the tantalum or tungsten disk be replaced by carbon, since the cost would be much less and the wear would not be seriously high in terms of gram atoms/hour.

This, however, does not appear feasible because the specific conductivity of carbon[6] at high temperatures is very low (Fig. 7) and also because the thermal emissivity of the surface is very high. Hence to substitute a carbon disk for the tantalum or tungsten would demand that the power be greatly increased (doubled at least). Furthermore, an inspection of the curve (Fig. 8) will show that the gradient across the carbon for temperatures used would be prohibitively high. This is consistent with observation, for in all cases where it was tried, even with thin carbon disks, the filament melted before satisfactory operation had been achieved.

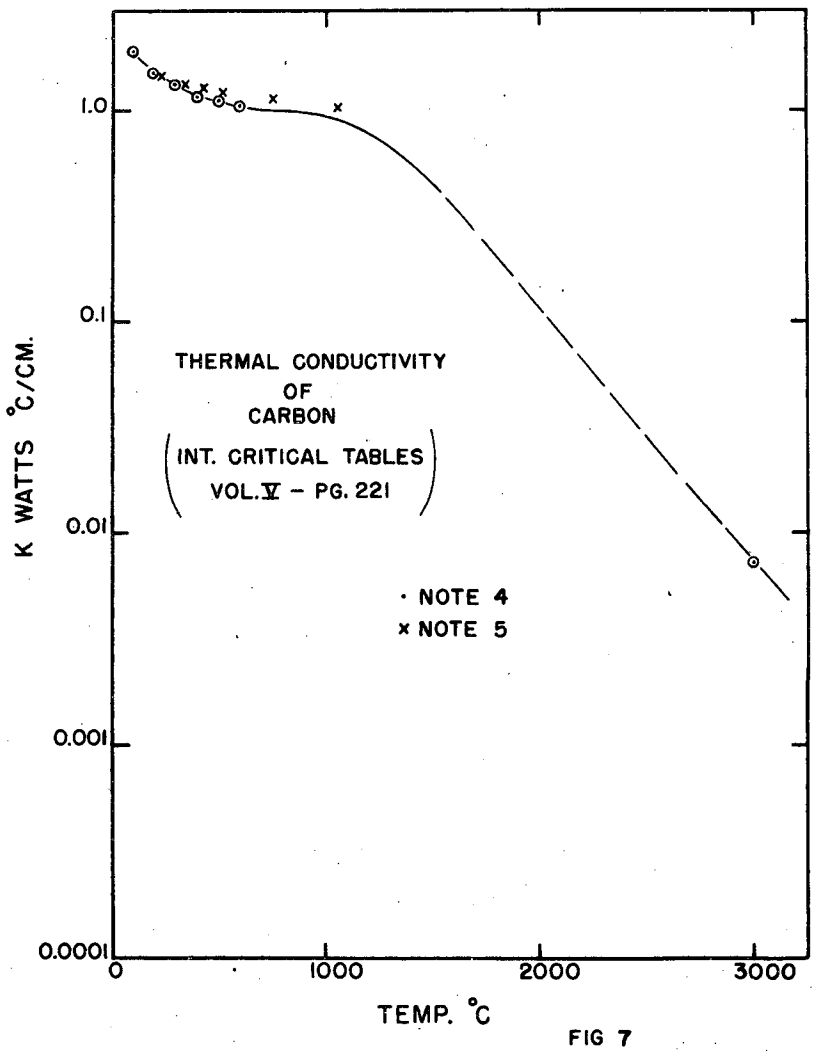
1.0
0.1
0.01
0.001
0.0001
K WATTS °C/CM.
THERMAL CONDUCTIVITY
OF
CARBON
(INT. CRITICAL TABLES
VOL. V - PG. 221)
· NOTE 4
× NOTE 5
0
1000
2000
3000
TEMP. °C

FIG 7

MU 4278

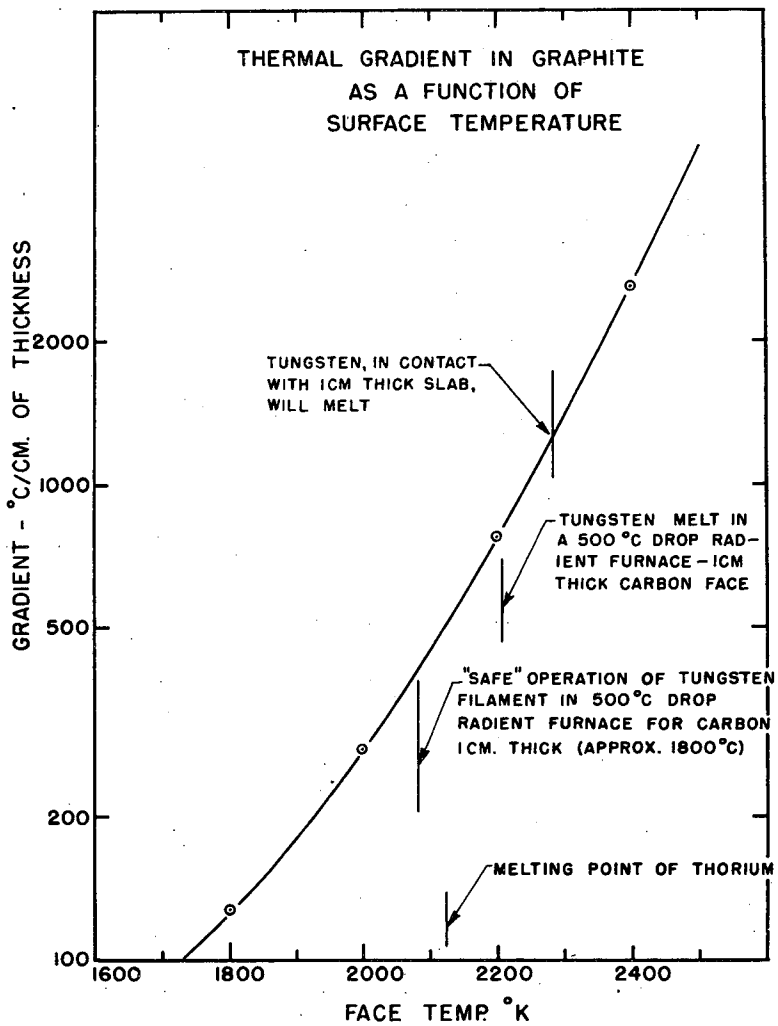
THERMAL GRADIENT IN GRAPHITE
AS A FUNCTION OF
SURFACE TEMPERATURE
GRADIENT - °C/CM. OF THICKNESS
2000
1000
500
200
100
1600
1800
2000
2200
2400
FACE TEMP. °K
TUNGSTEN, IN CONTACT WITH 1CM THICK SLAB, WILL MELT
TUNGSTEN MELT IN A 500 °C DROP RADIENT FURNACE - 1CM THICK CARBON FACE
"SAFE" OPERATION OF TUNGSTEN FILAMENT IN 500°C DROP RADIENT FURNACE FOR CARBON 1CM. THICK (APPROX. 1800°C)
MELTING POINT OF THORIUM

FIG 8

MU4279

As pointed out later in this report, however, a suitable change in cathode geometry has shown that carbon may well be used as an emitter.

It has further been proposed that thoriated carbon disks might well be used. In a test run in which thorium was embedded in slots in the carbon, the thorium apparently had been melted before operation was obtained. Figure 9 indicates the situation existing. The filament lasted but a short time, however. This aspect of the problem probably bears further investigation, but certainly not without close attention to the facts here noted and also with due regard to high vapor pressure of carbon at temperatures likely to be used.

## The Destruction of the Emitting Plate

While investigation of the factors involved in the erosion of the emitting plate is still being carried on, certain aspects of the matter appear to be relatively definite.

1. Tests made to determine the effect of gas pressure at the cathode indicate that the wear rate is strongly a function of this pressure, the wear rate being about three times as much at 0.8 $\mu$ as it is at 0.4 $\mu$.
2. Brief tests also indicate that wear rate is roughly proportional to the arc potential. The effect of arc current has not been determined.
3. The material sputtered is redeposited in a relatively highly consolidated mass and presents essentially the same type of surface as the surface from which it came. Most of the material is deposited in the region of the cathode, paths being essentially optical.
4. Erosion, while more intense in the center of the arc occurs uniformly within a factor of two over the entire area of the emitting surface.

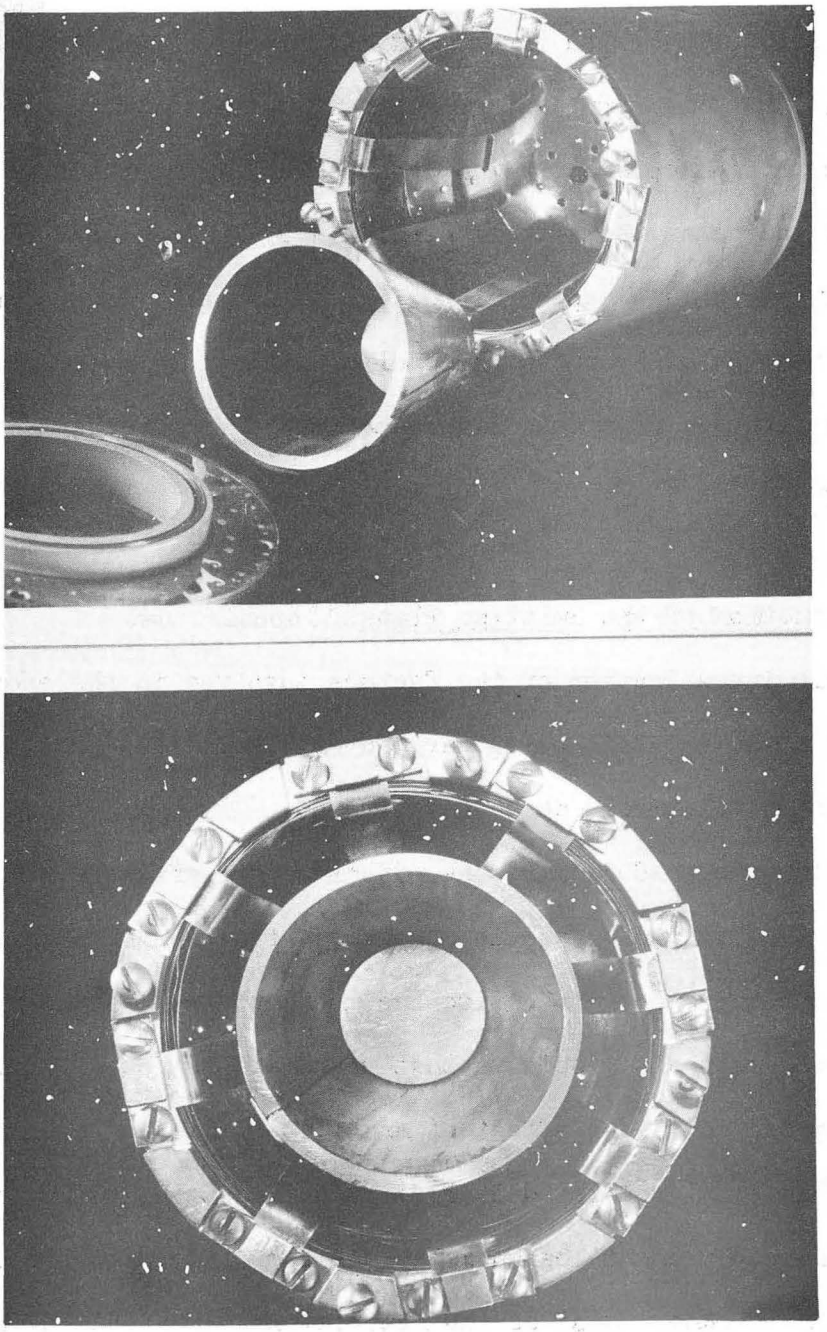

ZN-425

Fig. 9

The Cone Cathode

It has been proposed by John Foster and others that the flat emitting plate be replaced by a cone into which the arc must extend. This is proposed upon the basis that the sputtered material will, in part, be redeposited upon the emitter itself and will be used several times before it finally escapes the unit.

Such a device has been built and tested. The photographs (Fig. 9) indicates the general nature of its structure. While mechanical difficulties suggest some redesign, it performed very well and after 91 hours it was removed for inspection. The cone was made of tantalum and showed a wear rate of only 0.27 grams/hour which is three times as good as experienced with the flat plate design. It does not appear that any difficulty will be encountered in constructing such a cathode which will give at least 1000 hrs. of steady operation.

Since the effective thermal radiation area of the cone cathode is restricted to the open end, rather than that of the total surface area of the cone, the feasibility of the use of carbon becomes important. A calculation of the temperature drop to be expected through the cone if its average temperature is 2400° K is about 300° C for a thickness of 1/4 inch.

Such a carbon cone, has been built and tested by Bruce Cork. The same furnace was used as in the case of the tantalum cone. Operation was satisfactory and the power required was less than 10 percent more than in the run with tantalum. An indicated work function for carbon of 3.9 volts appears to be applicable in this case. No new complicating factors were encountered. Since the running time was short (four hours) further investigation is indicated.

Causes of Failure

Failures of the cathode assembly fall into three partially independent categories.

1. Excessive power required due to poisoning of the emitting plate, resulting in filament burnout.
2. Failure of heat shielding due to pressure loading of the foils of which the shielding is made. This causes excessive power to be used and also results in filament burnout.
3. Emitting plate erosion which finally would demand discontinuance of operation due to destruction of the filament and heat shielding.

The nature of the effects of poisoning has already been discussed. It appears that the use of tantalum is of questionable value in-as-much as under conditions met in an ion pump, serious poisoning is likely. Runs already made with tungsten plate emitters indicate almost no such effects and the operating power is quite uniform over long periods of time.

Factors involved in the failure of heat shields appear to be two-fold. Constructions which have allowed the shields to be pressed together, even under loads of but a few ounces per sq. inch, have in due time, become adherent and apparently only as effective as a single shield even though they initially consisted of eight or ten layers of 2 or 5 mil tungsten sheet. This occurred despite what appeared to be adequate dimpling. Shields not dimpled were worse in this respect than those in which dimpling was incorporated.

A second factor in the failure of shields has been the contamination of the shields through either the inclusion of low melting point materials such as stainless steel from screws and other parts which had been misjudged

as running at low temperatures. As soon as any of this molten material gets on any part of the shields it rapidly spreads, forming low melting point mixtures with the tungsten itself. The source of contamination must be meticulously avoided.

In this connection it has been observed that if the tungsten shields are allowed to come in contact with graphite parts under a concentrated load of more than a few ounces per square inch, the formation of tungsten carbide soon results. It not only destroys the shield at the point of load, but in regions of high temperature (above 3000° K) will travel to other parts of the shield system in liquid form and reduce the effective number of the shields.

The source of loading in the cathodes so far used has been in the support of the emitting plate. These plates were as heavy as 750 grams in some cases. Resting this on the shields is not advisable although the shields must cover the edges of the plate. Small pins through holes in the shields should be incorporated in the design.

Erosion studies are at this time incomplete. However, the possibility of re-use of sputtered material as in the case of the cone emitter suggests that a tungsten loss rate of about 0.25 grams or less per hour can be expected.

The design and development of the cathodes here described has been possible through the cooperation and the efforts of John Foster, Warren Eukel and Norval Parker. Automatic controls, relieving the operators of the necessity of monitoring the equipment, thus making long runs possible, was designed and installed by Marian Jones and his group.

## REFERENCES

1. Quarterly Progress Report, UCRL-1680, Section 5, "Ion Pump Development," Feb. 29, 1952.

2. Quarterly Progress Report, UCRL-1774, Section 4, "Ion Pump Program," May 5, 1952.

3. D. Q. Kern, Process Heat Transfer, New York, McGraw Hill, 1950, pg. 75.

4. T. W. Macomber, Design Data, Radiation Lab., University of California October 14, 1944, D.D. No. 54, pg. 1.

5. S. Mrozowski, Physical Review, April 15, 1952, p. 251.