Submitted to Nuclear Instruments and Methods

UCRL-19325
Preprint

c.2

A LEADING-EDGE TUNNEL-DIODE DISCRIMINATOR

RECEIVED
LAWRENCE
RADIATION LABORATORY

APR 3 1970

LIBRARY AND
DOCUMENTS SECTION

Jürgen Harms

January 1970

AEC Contract No. W-7405-eng-48

TWO-WEEK LOAN COPY

This is a Library Circulating Copy which may be borrowed for two weeks. For a personal retention copy, call Tech. Info. Division, Ext. 5545

LAWRENCE RADIATION LABORATORY
UNIVERSITY of CALIFORNIA BERKELEY

UCRL-19325 c.2

37

DISCLAIMER

This document was prepared as an account of work sponsored by the United States Government. While this document is believed to contain correct information, neither the United States Government nor any agency thereof, nor the Regents of the University of California, nor any of their employees, makes any warranty, express or implied, or assumes any legal responsibility for the accuracy, completeness, or usefulness of any information, apparatus, product, or process disclosed, or represents that its use would not infringe privately owned rights. Reference herein to any specific commercial product, process, or service by its trade name, trademark, manufacturer, or otherwise, does not necessarily constitute or imply its endorsement, recommendation, or favoring by the United States Government or any agency thereof, or the Regents of the University of California. The views and opinions of authors expressed herein do not necessarily state or reflect those of the United States Government or any agency thereof or the Regents of the University of California.

A LEADING-EDGE TUNNEL-DIODE DISCRIMINATOR*

Jürgen Harms†

Lawrence Radiation Laboratory
University of California
Berkeley, California

January 1970

ABSTRACT

A fast and highly stable leading-edge pulse discriminator has been designed (50 mV sensitivity; 1.2 nsec slewing; 0.1 mV/°C threshold stability). The circuit is based on a current switch consisting of a tunnel diode and a nonlinear load; operational amplifier stabilization provides temperature stability and independance from variations of transistor parameters without adjustments.

---

† Present Address: Atominstitut d. Öst. Hochschulen
A1020 Wien, Österreich

I. INTRODUCTION

A fast leading-edge discriminator was required as part of a modular instrumentation system. Since the rest of the system uses integrated circuits, an integrated-circuit discriminator would have been desirable. Several integrated circuit designs were investigated (fast emitter-coupled Schmitt triggers and line receivers, fast differential comparators) and were found to be too slow by about an order of magnitude. Therefore a discrete-component tunnel-diode discriminator has been designed whose output voltage levels are compatible with emitter-coupled integrated circuits. The following points were emphasized to achieve optimum performance:

1. Operating the tunnel diode with a nonlinear load line:

   to obtain high sensitivity and yet to use a high-peak current (= high speed) tunnel diode,

   to achieve high speed by using current switching and by avoiding reactive components--both enhanced by the nonlinear load,

   to avoid problems with the "tristable characteristic" of tunnel diodes.

2. Use of operational amplifiers for regulating the operating point of critical transistor stages:

   to obtain good temperature and long-term stability,

   to minimize the number of needed trimmer potentiometers and of individual adjustments.

3. DC coupling to allow high repetition rates.

4. Optimizing the geometric layout for high-speed operation and high packaging density.

II. NONLINEAR LOAD LINE

A nonlinear load line permits loading the tunnel diode with a high impedance in the low-voltage state and with a low impedance in the high-voltage state [1-3]. Both are desired.

A high load impedance in the low-voltage state (before the discriminator has triggered) makes a large fraction of the input current drive the tunnel diode, achieving high sensitivity. In the design discussed a sensitivity of 50 mV into 50 Ω with a TD252A tunnel diode (4.7 mA ± 10%) was desired. Limiting the most sensitive bias of the tunnel diode to the conventional 80% of the nominal peak current requires that the load resistor be greater than 300 Ω when the tunnel diode is in its low-voltage state.

A low impedance in the high-voltage state permits an operating point close to the valley point of the tunnel diode (steep load line!) if the discriminator is triggered; this is necessary to obtain small hysteresis. For a TD252A about 30 Ω is a maximum for the load impedance.

Only a nonlinear load line can truly satisfy both conditions. An inductive load--the standard design--substitutes a dynamic load line for the nonlinear load line. This is a good approximation if the shape of the input pulse is always the same--the same part of the

dynamic load line will always be seen at the same time in processing a pulse, thus approximating a nonlinear load line. The disadvantage is that the characteristics of the discriminator depend on the shape of the input pulse. The threshold, for instance, depends on the rise time of the input pulse.

Any kind of fast diode with a low depletion capacity is a good implementation of the desired load line. No transistors with the required specifications were available. Fast junction diodes (MA4121) and hot-carrier diodes (hp2303) have been used successfully. However, the temperature dependence of the diode characteristics make their use unsatisfactory. Finally a backward diode has been used. It combines a fairly low impedance in the reverse region with a high enough impedance in the forward low-voltage region to make changes of the forward current with changing temperature negligible. Figure 1 shows the main elements of the discriminator circuit.

This circuit provides current switching and therefore very fast operation, and is insensitive to temperature changes. Its characteristics do not depend on the repetition rate or the shape of the input pulses.

When the tunnel diode switches from its low-voltage state to the high-voltage state it makes the backward diode in turn switch from the high-impedance forward region to the low-impedance backward region. This action switches most of the input current from the tunnel diode to the backward diode and the output circuit, providing the desired current switching.

The common-base stage looks like a virtual ground with an adjustable level to the load of the tunnel diode. This level is regulated with an operational amplifier and establishes very stable operating conditions.

The nonlinear load itself is used as a coupling element to the output circuit--a further reduction of the parasitic loads for the tunnel diode, since it avoids the customary loading with an output circuit. This improves the speed and the sensitivity of the circuit.

There are two problems connected with this circuit. Once the discriminator is triggered, most of the input current goes through the backward diode to the output stage. Therefore, above the threshold level, the output current depends strongly on the input pulse height. This can be easily overcome by having one more trigger stage. This second stage can be made very simple, since a threshold has already been established and since the second stage is used only to standardize the output pulses.

The second problem originates from the high capacitance of all reasonably low-priced backward diodes. The high capacitance differentiates the voltage drop developed across the tunnel diode and feeds the result to the output. This differentiation results in small current spikes at the output even if the discriminator does not trigger on an input pulse. The only way to cope with this problem is to wisely select the type of backward diode and to find a compromise between the capacitance and the other important features of the diode (forward current, backward impedance). In this circuit a BD3 has been

used. The spikes mentioned are small enough to be suppressed in the second discriminator stage. This second problem seems to be the major limit on further improving this kind of circuit.

Another reason for using a nonlinear load line is that fast tunnel diodes exhibit a "tristable characteristic" (fig. 2)[4,5]. This can be explained as very high frequency oscillations of the tunnel diode in its negative resistance region. The observed characteristic is obtained by (automatically) integrating these oscillations. Since the discriminator circuit integrates these oscillations too, the tristable characteristic may be regarded as real for the present purpose. On the other hand, the shape of the distorted part of the characteristic depends so strongly on the electrical length of the tunnel diode leads that positively using this effect does not seem to be indicated.

Figure 2 illustrates that with a given linear load a tunnel diode can behave as a monostable, a bistable, or a tristable circuit, depending only on the bias. Different input pulse heights make the circuit settle in different stable states. Figure 2 shows also that a nonlinear load line can be biased to intersect the tunnel diode characteristic only outside the distorted regions, and permits safe monostable operation.

III. USE OF OPERATIONAL AMPLIFIERS

Low cost operational amplifiers can successfully prevent temperature drifts due to variations of emitter-base voltage and keep dc

levels at a desired value [6]. Such a technique is extensively used in this discriminator; the excellent temperature stability is a direct consequence. M2 (fig. 3) is used exactly as described in ref. 6). It serves two purposes: terminating the input resistor to true ground level without requiring a potentiometer adjustment, and eliminating the influence of the temperature-dependent emitter-base voltage of Q2 on the collector current. M3 regulates the operating point of Q3 (actually of Q2 and Q3; but Q2 is already stabilized by M2). The attenuation at the noninverting input needed for correct duty-cycle compensation is obtained in two stages; one stage is used in common with M2 to reduce loading of the input. The attenuation for M3 must be about twice as great as for M2 to compensate for the attenuation at the inverting input of M3 (which is needed to establish the proper dc level).

M4 and M5 do not need duty-cycle compensation. They regulate auxiliary dc levels which do not influence the threshold and do not require great accuracy. Essentially these two operational amplifiers replace trimmer potentiometers. M4 determines the bias voltage across the backward diode, M5 regulates the dc level of the output pulses to ground level.

IV. dc COUPLING, PULSE CLIPPING

dc Coupling is a standard feature of most fast-pulse circuits. It prevents base-line shifting problems at high repetition rates. The entire discriminator is dc coupled. The only exception is the clipping-line transformer in the output circuit, which is used to provide narrow output pulses independently from the input pulses. A clipping line introduces a minimum of problems for high repetition rates in comparison with other means of differentiation.

It will be noted that the termination of the clipping line looks highly artificial. This termination definitely does not provide optimum speed, but it prevents losing too much signal into terminating resistors (with 50-Ω terminations an additional amplifier stage would have been necessary). This part of the circuit limits the resolution of the whole discriminator. But since the resolution is good enough, this termination has been selected as the cheaper solution. However, to take full advantage of the possibilities of the first discriminator stage, a more sophisticated output circuit would be necessary.

V. GEOMETRIC LAYOUT

For high-speed circuits it is important to have a very low-inductance ground conductor and short signal leads. Short leads as well as the demand for small physical dimensions require close spacing between components. But the closer the components get to each other,

the less space remains for a good ground plane.

Therefore a combination of printed circuit board and cordwood technique has been used for the layout of the discriminatory (fig. 4). All components in the direct signal path of the ac signal are on one small printed circuit board. This board does not contain any dc biasing circuits or dc leads. This leaves enough space for the ground plane. A second board contains all necessary biasing circuits, and has printed circuit conductors to points opposite the places on the first board where a dc voltage is needed. Connection between the two boards is made with pairs of ordinary connector pins. The use of these pins instead of straight wires allows connecting and disconnecting the two boards as needed for debugging. The pins are rigid enough to provide safe connection.

VI. PERFORMANCE

The following values have been measured as typical performance data.

Sensitivity: adjustable between 50 and 500 mV (input impedance = 50 Ω); adjustment is performed by varying the dc current into the threshold input between 0 and 2 mA (threshold input is a virtual ground and can be used as a summing point for a digital-to-analog converter to provide remote digital control).

Slewing: 1.2 nsec for input pulse-height variations of 50 to 500 mV.

Pulse delay: 8 nsec (leading edge of input pulse to leading edge of output pulse measured on printed circuit board).

Output pulse: negative, from 0 to -0.8 V (loaded with 500 Ω, compatible with MECL III*), 0.8 nsec rise time (leading edge), 5 nsec pulse width.

Temperature stability of threshold: 0.1 mV/°C.

Influence of supply voltages on threshold: 6 mV/% of supply voltage variation.

ACKNOWLEDGEMENT

This work was performed under a fellowship grant by the Max Kade Foundation. I want to express my sincere gratitude for the generous support. Special thanks is given to H. G. Jackson for many valuable discussions.

---

* The logic levels of MECL III are shifted up by 0.8 V from the values specified by the manufacturer by using a second supply voltage.

FOOTNOTE AND REFERENCES

* This work was carried out as part of the research program of the Physics Instrumentation Division of the Lawrence Radiation Laboratory, University of California, which is supported by U.S. Atomic Energy Commission Contract W-7405-eng-48.

1) R. H. Bergmann et al., RCA Review 23 (1962) 157.

2) H. Verwej, Proc. Intern. Symp. Nucl. Electronics (Paris, Nov. 1963) 723.

3) V. Radeka, Nucl. Instr. and Meth. 22 (1963) 153.

4) Tunnel Diode Manual, 1st edition, (General Electric Co., Owensboro, Kentucky, 1961), p. 64.

5) L. Stanchi, Proc. IEEE 54 (1969) 68.

6) J. Harms, to be published in Nucl. Instr. and Meth. "Compensation of Emitter-Base Voltage Variations with Operational Amplifiers."

FIGURE CAPTIONS

Fig. 1. Tunnel diode with nonlinear load as current switch

Fig. 2. Tristable Characteristic of tunnel diode with nonlinear and linear load lines.

Fig. 3. Schematic of the discriminator.

Fig. 4. Discriminator plug-in unit.

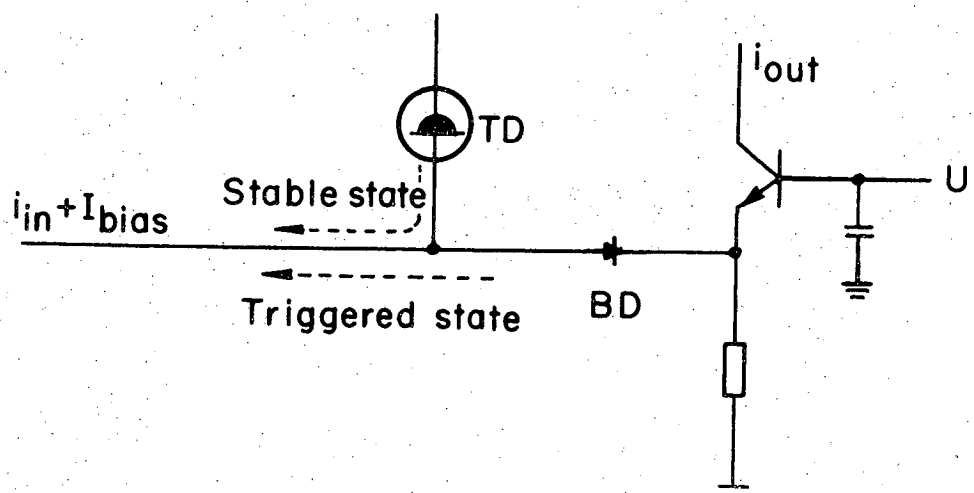

XBL699-3678

Figure 1

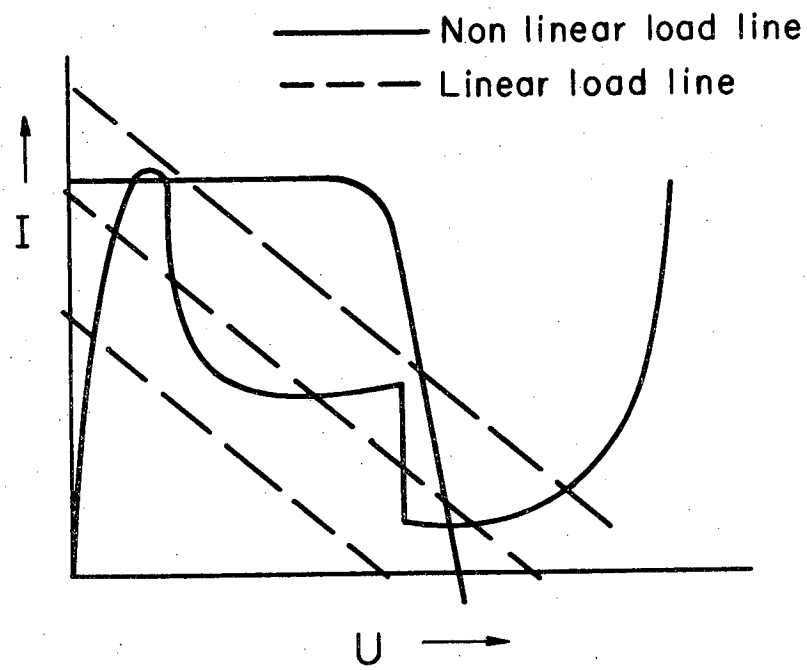

XBL699-3679

Figure 2

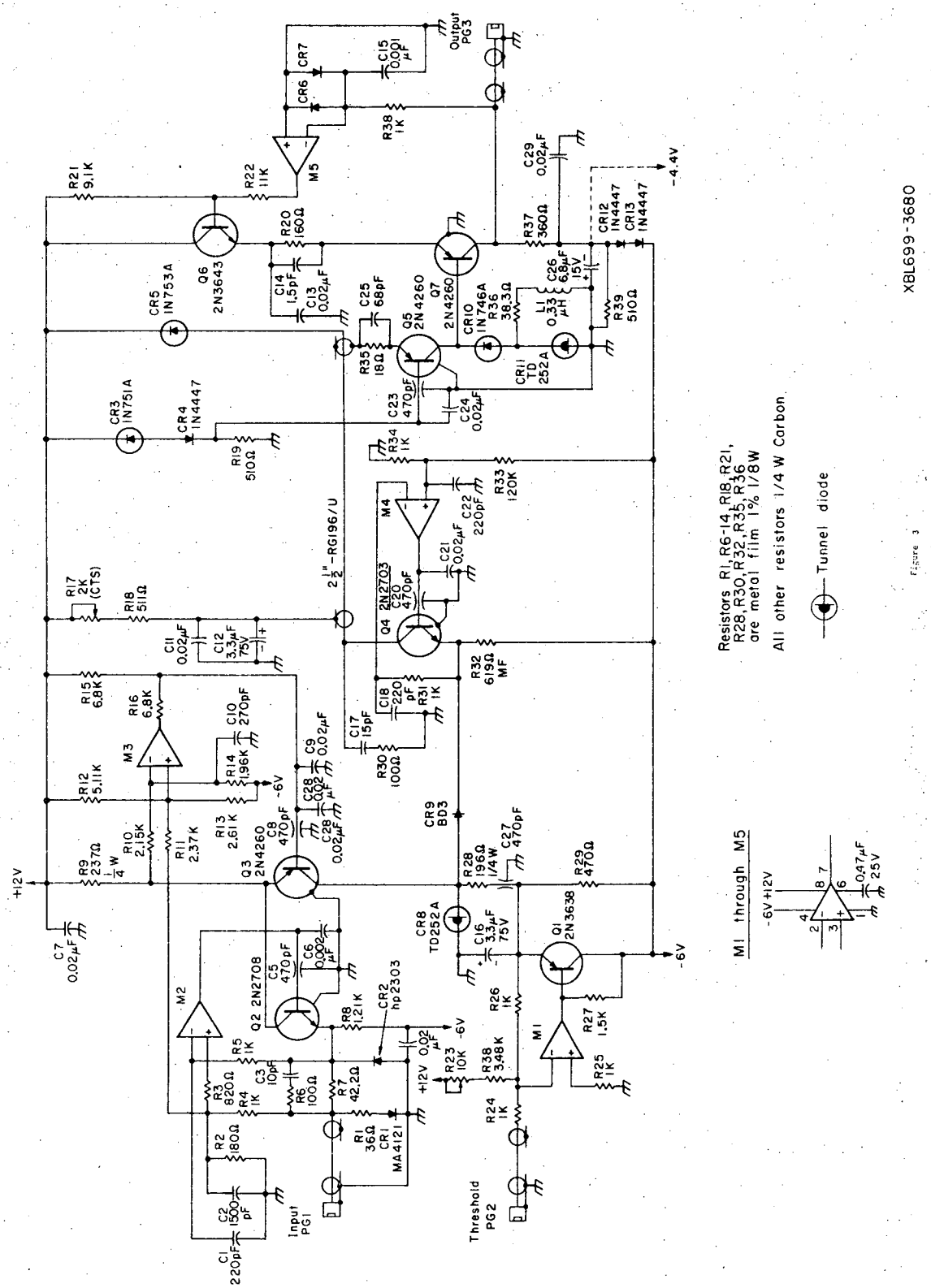
Resistors R1, R6-14, R18, R21, R28, R30, R32, R35, R36 are metal film 1% 1/8W
All other resistors 1/4 W Carbon
Tunnel diode
M1 through M5
XBL699-3680
Figure 3
Input PG1
Threshold PG2
Output PG3
+12V
-6V
-4.4V
2½" -RG196/U

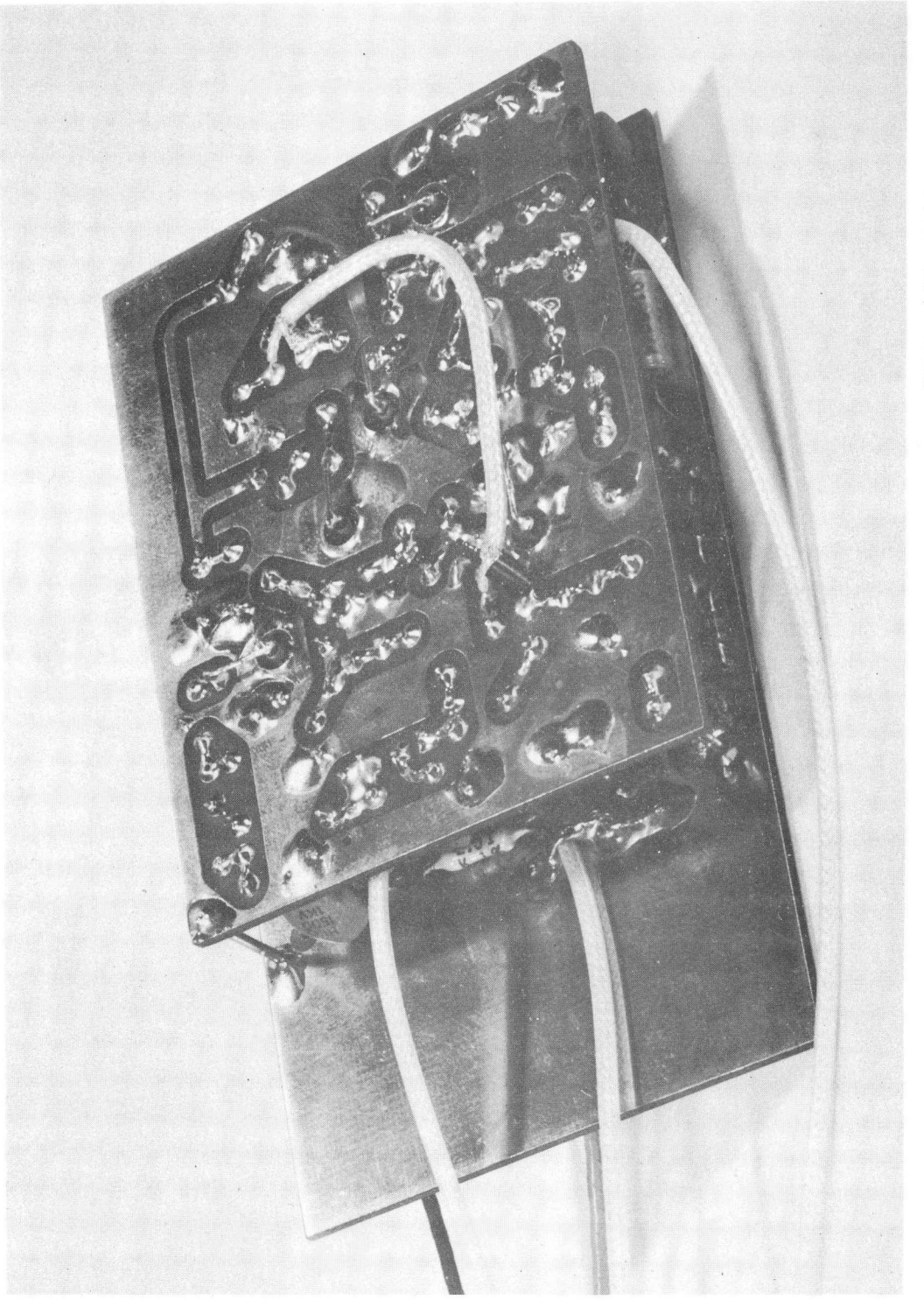

CBB 699-5764

Fig. 4 (a)

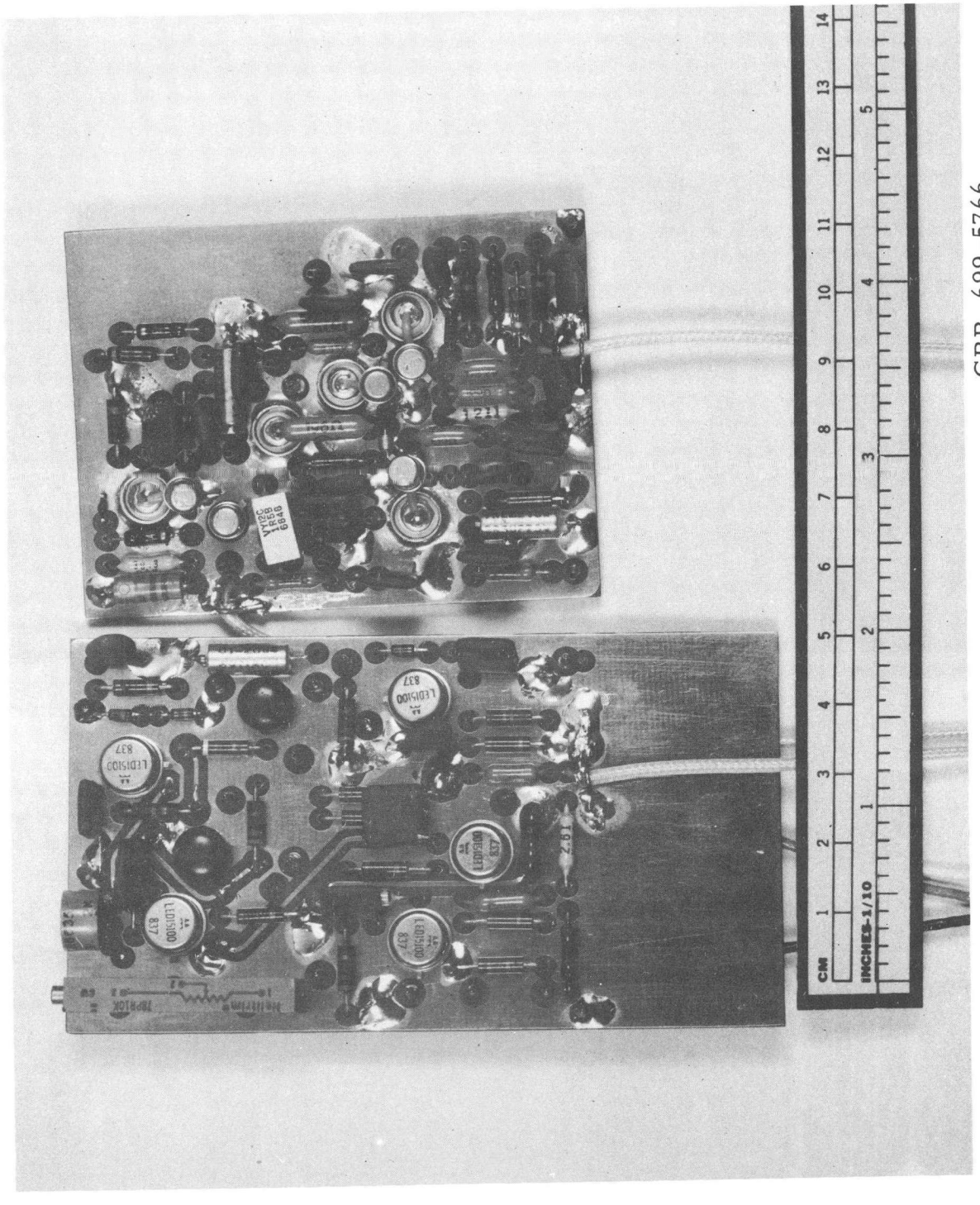

CBB 699-5766

Fig. 4 (b)

LEGAL NOTICE

This report was prepared as an account of Government sponsored work. Neither the United States, nor the Commission, nor any person acting on behalf of the Commission:

A. Makes any warranty or representation, expressed or implied, with respect to the accuracy, completeness, or usefulness of the information contained in this report, or that the use of any information, apparatus, method, or process disclosed in this report may not infringe privately owned rights; or

B. Assumes any liabilities with respect to the use of, or for damages resulting from the use of any information, apparatus, method, or process disclosed in this report.

As used in the above, "person acting on behalf of the Commission" includes any employee or contractor of the Commission, or employee of such contractor, to the extent that such employee or contractor of the Commission, or employee of such contractor prepares, disseminates, or provides access to, any information pursuant to his employment or contract with the Commission, or his employment with such contractor.

TECHNICAL INFORMATION DIVISION
LAWRENCE RADIATION LABORATORY
UNIVERSITY OF CALIFORNIA
BERKELEY, CALIFORNIA 94720