Talk given at the International Conference
on Nuclear Reactions Induced by Heavy
Ions, Heidelberg, Germany, July 15-18, 1969

UCRL-19405
Preprint

c.2

PROSPECTS FOR SUPER HEAVY NUCLEI

RECEIVED
LAWRENCE
RADIATION LABORATORY
JAN 9 1970
LIBRARY AND
DOCUMENTS SECTION

W. J. Swiatecki

July 25, 1969

AEC Contract No. W-7405-eng-48

TWO-WEEK LOAN COPY

This is a Library Circulating Copy which may be borrowed for two weeks. For a personal retention copy, call Tech. Info. Division, Ext. 5545

LAWRENCE RADIATION LABORATORY
UNIVERSITY of CALIFORNIA BERKELEY

UCRL-19405 Cy. 2

34

DISCLAIMER

This document was prepared as an account of work sponsored by the United States Government. While this document is believed to contain correct information, neither the United States Government nor any agency thereof, nor the Regents of the University of California, nor any of their employees, makes any warranty, express or implied, or assumes any legal responsibility for the accuracy, completeness, or usefulness of any information, apparatus, product, or process disclosed, or represents that its use would not infringe privately owned rights. Reference herein to any specific commercial product, process, or service by its trade name, trademark, manufacturer, or otherwise, does not necessarily constitute or imply its endorsement, recommendation, or favoring by the United States Government or any agency thereof, or the Regents of the University of California. The views and opinions of authors expressed herein do not necessarily state or reflect those of the United States Government or any agency thereof or the Regents of the University of California.

(Talk given at the International Conference on Nuclear Reactions Induced by Heavy Ions, Heidelberg, Germany, July 15-18, 1969.)

UCRL-19405

PROSPECTS FOR SUPER HEAVY NUCLEI*

W. J. Swiatecki

Lawrence Radiation Laboratory
University of California
Berkeley, California

July 25, 1969

INTRODUCTION

You may find the title of this talk misleading. I will not try to summarize recent predictions concerning super-heavy elements. This is done very well in a paper by S. G. Nilsson et al., available as a UCRL and to appear shortly in Nuclear Physics.[1] There is even a Review Article[2] already available by G. T. Seaborg in Ann. Rev. Nucl. Sci. (1968).

The probable existence of an island of relative stability around $Z \approx 110$, $N \approx 184$ is really old stuff by now, and it is more exciting to look at the second stage in the game.

The first stage was concerned with the question "can super-heavy elements exist and what are their lifetimes"?

The second stage is centered on the question "how to make them and what are the cross sections"?

There are three ways of discovering or making super-heavy elements:

1. Find them in nature.
2. Use massive neutron irradiation.
3. Use heavy ions.

I will only discuss #3, since this is a conference on Heavy Ions.

The basic idea is of course: bang together two nuclei and hope a super-heavy nucleus will come out. Many combinations of target and projectile have been suggested for the reaction:

$$A_1 + A_2 + \text{Hope} = \text{Super-Heavy Nucleus.}$$

I would like to classify the reactions into three groups according to the scheme illustrated in Fig. 1.

There are two principal difficulties in all the proposals:

1. How to make the neutron to proton ratio come out in the neighborhood of 184:110.

2. How to make the reaction sufficiently gentle so as not to shatter the extremely brittle super-heavy nucleus one is trying to form.

Let me stress the second difficulty, because it is less obvious. The fact that super-heavy nuclei will probably have high fission barriers and long half-lives tends to obscure the fact that they are very brittle. By this I mean that although they are stable and stiff they can stand only a small amount of distortion from the spherical shape. I would compare a super-heavy nucleus to a crystal ball, or even a crystal wine glass. It is very stiff and permanent if left to itself, but beware of distorting it much from its symmetric shape. If you do it will shatter at once.

This brittleness may be the biggest factor in cutting down cross sections for the formation of super-heavy nuclei in heavy-ion reactions, because heavy-ion reactions are violent affairs. They lead as a rule to large vibrations and rotations of the system and this is bad if you are dealing with a brittle object.

A quantitative measure of the brittleness of a nucleus is the size of the critical distortion beyond which it will disintegrate--a kind of elastic yield point. In fission theory jargon this is called

the saddle-point shape, beyond which the nucleus falls apart. The following table illustrates how nuclei become very brittle in the relatively narrow range of masses between Po, say, and Z = 110:

	Critical Shape	Brittleness
Po		like rubber
U-Fm	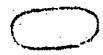	like plexiglas
110		like crystal.

Recently very interesting experiments in Dubna have demonstrated that the Po nucleus sometimes comes off as a fission fragment in the bombardment of U with Ar. This has led to some optimism that elements like Z = 110 might come off in the fission of U + Kr or Xe. I hope I am wrong, but the extrapolation from Po to 110 may be misleading. Po is very resilient and may well survive the trauma of its birth as a fission fragment. With the brittle nucleus 110 the dangers are much greater.

To summarize: From the point of view of brittleness Type I reactions are least objectionable. From the point of view of the N:Z ratio Type III reactions are least unfavorable. (Type II reactions tend to have Coulomb barriers lower in relation to their Q-values than Type I reactions. This is sometimes thought of as an advantage which would make "cold fusion" possible. The high Q values may or may not be an advantage, but the argument for cold fusion is not sound.)

Many ingenious suggestions have been made and are being made to get around the two principal difficulties of making super-heavy nuclei with heavy ions. What can one do to take these suggestions out of the realm of speculations?

What is needed is the accumulation of a body of theoretical and experimental understanding of the interactions between heavy nuclei. This is today an unexplored field, but one in which intense activity is to be expected in the next few years. I will spend the main part of my talk in an attempt to bring into focus what I believe are the basic considerations underlying the theory of heavy-ion reactions. This will be concerned with the physics of such reactions rather than with super-heavy elements. The understanding of the physics is however essential for the intelligent discussion of the prospects for super-heavy nuclei.

MACROSCOPIC AND LEPTODERMOUS APPROACHES

To me the central simplifying feature of heavy-ion reactions is that both target and projectile contain large numbers of particles. Hence the physics of their interactions approaches the physics of macroscopic objects, characterized by $A \gg 1$. This is really a new situation in nuclear reaction theory which, historically, has its roots in the idealization where the projectile is a structureless mass point. On the other hand the discussion of the interaction of two macroscopic objects is a familiar concept in fission theory, and one may use fission theory as a guide in formulating the physics of heavy ion reactions. In fact the two fields are identical in their basic concepts and one may regard them as different applications within the single domain of "nuclear macro-physics" characterized by $A \gg 1$. A particularly simple version of the macroscopic approach results if the cube root of A may be treated as large. This has to do with the requirement that the diffuseness of the nuclear surface should be small compared to the nuclear radius. Thus if a system possesses a reasonably well-defined boundary it should be possible to describe its state approximately in

terms of macroscopic quantities such as the geometrical shape of this boundary.

Chin-Fu Tsang in Berkeley has recently contributed to the analysis of the validity of such a macroscopic description for an assembly of particles characterized by a thin surface layer.[3] We use the name LEPTODERMOUS to describe a system which satisfies this condition of having a thin surface. (From Greek: LEPTOS = small, thin; DERMA = skin.) We have, of course, a lot of evidence that nuclei are approximately leptodermous systems.

The basic simplification in formulating the theory of such systems is that one may use the dimensionless quantity

$$\frac{\text{Surface diffuseness}}{(\text{Volume})^{1/3}} \approx A^{-1/3}$$

as a small parameter in a series expansion of properties of interest.

Let me point out that the macroscopic and leptodermous approximations are not to be confused with a classical approach. The following table should make this clear. The criterion for a classical treatment

Approximation	Criterion
Macroscopic	$A \gg 1$
Leptodermous	$A^{1/3} \gg 1$
Classical	$\frac{\text{"action"}}{\hbar} \gg 1$

is that in a dynamical process the relevant action, measured in units of $\hbar$, should be large. This is not the same as the assumption $A \gg 1$. An example of a macroscopic but not classical treatment of a system is the Thomas-Fermi description of atomic electrons. An example of a leptodermous but not classical treatment is the discussion of the quantized oscillations of an idealized liquid drop.

Chin-Fu Tsang has extended earlier work of Hill and Wheeler[4] and of Hilf and Sussmann[5] to illustrate the convergence of the leptodermous expansion in the case of systems resembling nuclei, i.e. in the case of fermions in a potential well of nuclear dimensions.

One example he gives is the total energy of 240 such fermions at nuclear density inside a potential well of variable shape. This energy can be calculated exactly by summing 240 eigenvalues, or it can be approximated by a macroscopic expansion in powers of $A^{-1/3}$ on the leptodermous model.

The comparison of the results looks like this

Order in $A^{1/3}$	Energy (MeV)	% of Total	Running Sum
A (= 240)	4830	69.86%	69.86%
$A^{2/3}$	1845	26.68%	96.54%
$A^{1/3}$	225	3.26%	99.80%
Total	6900		
Exact Sum	6914		100%
$\therefore$ A^{0} + Rest	14	0.20%	

From such studies we conclude that the leptodermous expansion is quite an excellent starting point for describing the overall properties of nuclear energies.

The fundamental consequence which follows from the leptodermous character of a system is that the shape dependence of the potential energy can be predicted to be of the following form

$$\text{P.E.} = c_1(\text{Volume}) + c_2(\text{Surface Area}) + c_3(\text{Integrated Curvature}) + \cdots .$$

To this we may add

$$+ \ (\text{Coulomb Energy}).$$

This looks like a Liquid Drop mass formula--which it is--but I want to stress that it is much more general in its range of validity. As I said, it applies to a shell model of quantized noninteracting fermions in a potential well no less than to a droplet of water. In particular the shape dependence predicted by this formula has been tested by Chin-Fu Tsang to the accuracy I indicated by varying the shape of the potential well and summing the 240 eigenvalues.

Having satisfied ourselves that the leptodermous expansion is well-founded, let us consider the approximation in which only leading terms are kept. These are (apart from a constant volume energy) a surface energy and a coulomb energy. From these we can form a single dimensionless parameter which specifies the static properties of a charged leptodermous system. We may take this parameter to be the familiar fissility parameter x of nuclear fission theory, specifying

the relative intensity of electrification of the system

$$x \equiv \frac{1}{2} \frac{E_{coulomb}(\text{sphere})}{E_{surface}(\text{sphere})}$$

$$= \frac{1}{10} \frac{(\text{charge})^2}{(\text{volume})(\text{surface tension})}$$

$$\approx \frac{1}{50} \frac{Z^2}{A}$$

for nuclei.

This is a simple but basic fact of both fission theory and heavy-ion physics: as regards statics, the principal features of the potential energy may be discussed in terms of a surface energy and a coulomb energy, with a single dimensionless parameter specifying their relative strengths.

STATICS

I will illustrate the consequences of this fact by considering two-dimensional potential energy maps relevant for heavy-ion reactions as well as for fission physics. Such potential energy maps, showing the energy as a function of the shape of the system, should in principle be many-dimensional. It turns out that if you simplify the problem as much as you possibly can without falsifying relevant qualitative features, you end up with two dimensions. For a very important reason one dimension is not enough in principle, but two dimensions are O.K.

(I will make a digression to explain this. In conventional nuclear reaction theory, rooted in the mass-point description of the projectile, one often starts by drawing a one-dimensional potential well, with a coulomb barrier if the projectile is charged. The most

significant single feature of Fig. 2 is the division of the configuration space into two regions, inside and outside of the barrier.

For two or more dimensions the role of a potential energy barrier is played by a "saddle point with one degree of instability" (Fig.3) and the configuration space gets divided instead into three regions: inside, outside and neither.

A formal analogy of this situation in the case of four dimensions is the division of space-time into the three regions: past, future and space-like regions.

The failure to appreciate this qualitative distinction between one-dimensional and more-than-one-dimensional reaction theory has led to very down-to-earth consequences. It is the root of misunderstandings about whether overcoming a coulomb barrier or the Q-value in a heavy-ion reaction is or is not enough to lead to a compound nucleus. The question is phrased as if the amount of energy by itself could provide the answer (as it can in the case of one dimension). In the case of more than one dimension if you happen to be in the "NEITHER" region the question cannot be answered on the basis of the potential energy alone: the consideration of dynamics becomes necessary. The lesson of this is that in heavy-ion and fission physics "two-dimensional thinking" must replace the "one-dimensional thinking" of ordinary reaction theory.)

The two dimensions which I will use in my potential energy maps correspond to a separation coordinate, measuring the distance between the two colliding nuclei (or the separation of the fission fragments) and an asymmetry coordinate, measuring the relative size of the two pieces.

My parameterization of the possible nuclear shapes will be in terms of the external surfaces of two intersecting spheres of radii R_1 and R_2, whose centers are at a distance ℓ. (See Fig. 4.)

It turns out to be convenient to define the following dimensionless polar coordinates r, θ :

$$r = \frac{\ell}{R_1 + R_2} \qquad \text{separation coordinate.}$$

$$\theta = \frac{\pi}{2} \frac{R_1 - R_2}{R_1 + R_2} \qquad \text{asymmetry coordinate.}$$

With this choice, $r = \infty$ means infinitely separated fragments and $r = 1$ means touching fragments (the scission configuration). The case $\theta = 0$ means equal fragments (or reflection symmetric shapes) and $\theta = \pm 90^\circ$ means very unequal fragments; in fact one fragment has all the mass, the other one is a point.

Note also that whenever $\ell < |R_1 - R_2|$ we again have a single sphere. In terms of r, θ this condition reads

$$r < \frac{2}{\pi} |\theta| ,$$

and this corresponds to portions of two spirals, as shown in Fig. 5. Using this coordinate grid let us plot the potential energy of a nucleus considered as a leptodermous system, i.e. having a surface energy and a coulomb energy.

Figure 9 shows the case appropriate to a fairly heavy nucleus. (All the maps I will show are semi-quantitative. The spacing of the contour lines is one fiftieth of the surface energy of the compound system, which for a heavy nucleus would mean a spacing of some 10-20 MeV.

In all the plots the region of separated fragments, between $r = 1$ and $r = \infty$, has been compressed so that $r = \infty$ is shown as a semi-circle with radius twice the scission radius. The compression is such that the coulomb interaction energy decreases linearly to zero between $r = 1$ and $r = \infty$.)

Note the following features of Fig. 9. There are two regions of low energy: the original sphere (a mountain lake with spiral boundaries) and two fragments at infinite separation (the ocean). These are local minima in the energy. Between these two bodies of water is a land mass with a mountain ridge running across the map. There are two mountain peaks and three passes across the mountains. One pass is a symmetric configuration--this corresponds to the standard saddle-point shape of nuclear fission theory. The other passes are less familiar configuration of unequal fragments at infinity. The mountain tops are unstable asymmetric configurations of equilibrium, the so-called Businaro-Gallone shapes of fission theory. Their physical significance is, roughly speaking, that systems more asymmetric than a Businaro-Gallone shape will have a tendency to become even more asymmetric, whereas systems less asymmetric will tend toward symmetry.

The above figure refers to a rather heavy nucleus, or to a heavy ion and a target that together would make a heavy nucleus. Let us now see how the potential energy landscape changes as we go from very light systems (with $x \approx 0$) to super-heavy systems (with x in excess of 1.)

Figure 6 shows the case $x = 0$ (i.e. surface energy only). The landscape consists of the lake (single sphere), a higher region

(separated fragments) and a cliff overlooking the lake. The region of the cliff corresponds to the front half of a fission barrier (if you climb the cliff along a symmetric path with $\theta \approx 0$) or to the surface region of a nuclear potential well (if you climb it along a very asymmetric path, with θ close to $\pm 90^{\circ}$). In our diagrams there is thus a continuous connection between plots of fission barriers and plots of nuclear potential wells. Figure 7 corresponds to low x (light nuclei). We see the beginning of a low region corresponding to equal separated fragments. Note that at this stage the land mass has only a single mountain in the center. The only passes are the configurations of unequal fragments at infinity.

As x increases, a critical stage occurs at which the central mountain divides into two mountains, with a new pass between them. This is shown in Fig. 8, corresponding to medium nuclei. Next is Fig. 9, heavy nuclei, which I have discussed. Finally, Fig. 10 corresponds to super-heavy nuclei. The mountain range has been breached by the ocean across the symmetric saddle and there is a direct route from the lake into the ocean. The spherical shape has lost stability against disintegration.

Before leaving these Potential Energy maps let me make two remarks concerning the two idealizations on which they are based, namely:

1. Parameterization of nuclear shapes in terms of two intersecting spheres.
2. Disregard of shell effects in the leptodermous, macroscopic approach.

One knows from fission theory that in order to get quantitatively correct maps one has to improve the parameterization by introducing more

degrees of freedom. However, it turns out that the qualitative features remain as I have shown. These are:

For low x:	Two minima
($x \leq 0.396$)	One mountain
	Two passes
For high x:	Two minima
($x \geq 0.396$)	Two mountains
	Three passes.

The dividing line turns out to be $x = 0.396$ in a calculation which removes the restrictive parameterization. These features are basic invariants of the landscape, which characterize heavy ion and fission theory in the leptodermous idealization.

As regards shell effects, they would introduce bumps and wiggles on top of the average landscape that I discussed. For example, a magic compound nucleus would depress the level of the mountain lake (by some 10 MeV). A magic fragment or pair of fragments would introduce a narrow canyon running along a fixed θ from $r = \infty$ to $r = 1$ and even a little inside the scission circle. One speculates that such canyons might be responsible for the observed asymmetry of nuclear fission. Strutinski's secondary shells, responsible for spontaneous fission isomers, are ripples between the mountain lake and the ocean.

For many purposes these depressions, canyons and ripples are essential, but they should be viewed in the right perspective, as local fluctuations of a few MeV superimposed on the broad features measured in terms of tens of MeV and which are the result of the leptodermous character of nuclei.

DYNAMICS

Now let me say a few simple things about the dynamics of heavy ion and fission physics. This is necessary since the maps I discussed provide only the stage on which the dynamical processes of fission and fusion are played out. In the idealization that I considered there were two building blocks, two pieces of physics, from which the potential energy could be constructed: the surface and coulomb energies. How many new pieces of physics do we have to isolate in order to discuss dynamics?

My answer is two, once more. The two dynamical properties have to do with the general structure of any equation of motion. Thus in general any macroscopic equation of motion has three types of terms. Those involving the zeroth, first and second time derivatives of the generalized coordinates of the system. In simple language the terms with zeroth time derivatives make up the Potential Energy, those with second time derivatives make up the Kinetic Energy. The terms with first time derivatives are called friction, viscosity or dissipative terms.

In going beyond the static stage of our discussion there are thus two new pieces of physics to be discussed.

1. Generalized Inertia Coefficients.
2. Generalized Friction Coefficients.

In nuclear physics the inertia coefficients have been discussed in the case of rotations, vibrations and, more recently, nuclear fission. A cranking model is often employed.

The friction coefficients are usually not called by that name, but are related to calculations of widths of (collective) modes of motion. In general each given problem is handled individually; the inertia and friction coefficients being worked out from scratch in the given situation.

Here I would like to pose a question--without being able to give an answer. Is it not likely that when $A \gg 1$ a macroscopic limit is approached in which the inertia and friction coefficients--at least as regards average trends--can be deduced from average macroscopic properties, rather than from microscopic calculations on individual nuclei? I feel there must be some limiting form of the dynamics of very large nuclei which is derivable from the properties of nuclear matter and the gross shape of the nucleus. As we saw this is true in the case of the potential energy, where one does not have to work out the energy of each individual nucleus from scratch, but can get a good approximation of average properties from macroscopic considerations.

Let me remind you of some simple consequences that would follow from a dimensional analysis if the hypothesis of a macroscopic approach to nuclear dynamics turned out to be correct.

The validity of a macroscopic approach would imply that it is possible to define a local velocity field v in the nuclear fluid, and the leptodermous assumption would imply that all fluid elements in the bulk of the system have the same properties. One could then define a viscosity coefficient in the usual way as related to the rate, per unit volume, of dissipation of energy caused by the presence of velocity

gradients in the flow pattern. Thus

$$\frac{dE}{dt} = -\eta \iiint (\text{grad } v)^2 \, dx \, dy \, dz$$

$$\eta = \text{viscosity coefficient.}$$

The dissipation of energy cannot depend on the first power of the gradient of v for obvious symmetry reasons. I have simplified somewhat the definition of η,[6] but I wrote down this equation only to remind you of the dimensions of η

$$[\eta] = \frac{M}{LT} .$$

Let us suppose that in nuclear macro-dynamics there is something like a viscosity coefficient, with the above dimensions. We can then go through an elementary exercise in dimensional analysis to speculate on some simple features of nuclear dynamics. (In what follows I have assumed the validity not only of the macroscopic approach but also of the leptodermous approach. In the case of dynamics I feel less strongly about the validity of the latter, because the mean free path of nucleons is not small compared to the size of even the heaviest nuclei. The mean free path provides in fact a further dimensional quantity not considered in the analysis given below, which would hold in the limit of a short mean free path. In the opposite limit of a mean free path very <u>large</u> compared to nuclear sizes the situation is reminiscent of the calculation of the coulomb energy of a nucleus: because of the long (infinite) range of the electrostatic interaction a leptodermous approach —a division of the electric energy into bulk and surface terms --does not hold. A macroscopic approximation is, however, still valid).

Consider a blob of leptodermous nuclear matter with volume V, charge Q, density ρ, surface tension γ and viscosity η. The dimensions of these quantities are:

$$\left.\begin{aligned} [V] &= L^3 \\ [Q^2] &= \frac{ML^3}{T^2} \\ [\gamma] &= \frac{M}{T^2} \end{aligned}\right\} \quad \text{These define statics.}$$

$$\left.\begin{aligned} [\rho] &= \frac{M}{L^3} \\ [\eta] &= \frac{M}{LT} \end{aligned}\right\} \quad \text{These are required for dynamics.}$$

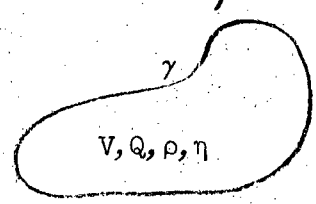

From these five quantities we can form three basic units of mass, length and time, appropriate to the system in question. In additon we can form two dimensionless parameters.

Thus, for example, we may introduce these units

$$u_L = \left(\frac{V}{\frac{4}{3}\pi}\right)^{1/3} = R_0 \text{ , radius of equivalent sphere;}$$

$$u_M = V\rho = M_0, \qquad \text{total mass;}$$

$$u_T = \frac{1}{\sqrt{8}}\sqrt{\frac{\rho R_0^3}{\gamma}} = \frac{1}{2\pi} \text{ (period of fundamental mode of uncharged, nonviscous sphere);}$$

$$= \frac{1}{2\pi} T_0 .$$

These units tell us how to scale different systems in order to make them comparable; for example, how to compare nuclei of different sizes, or how to compare a nucleus with a drop of water.

As our first dimensionless parameter we may take the fissility parameter discussed previously

$$x = \frac{1}{10}\,\frac{Q^2}{V\gamma} \propto \frac{Z^2}{A} \text{ for nuclei.}$$

Lastly we introduce the new dimensionless number, a "creep parameter":

$$z = \frac{\eta}{\sqrt{\gamma\,\rho\,R_0}}$$

$$= \frac{5\sqrt{2}}{19}\,\frac{\left(\begin{array}{c}\text{e-folding time of creeping return of uncharged}\\ \text{spheroid to sphere}\end{array}\right)}{u_T}$$

$$\propto A^{-1/6} \text{ for nuclei.}$$

(I have deduced the coefficient $5\sqrt{2}/19$ from Lamb,[7] who quotes Darwin, but have not checked it.)

If the creep parameter is large, the dynamics of the system are creepy, like those of honey. If the creep parameter is small the system is mobile, like mercury.

The fact that the A-dependence is so exceedingly slow shows that if nuclei in one neighborhood of the periodic table can be shown

to be mobile or creepy, the conclusion should hold for essentially the whole periodic table.

Well, how large is z? Are nuclei creepy or mobile? The precise answer may not be simple; for example, it will depend on the degree of excitation (i.e., a temperature dependence of the viscosity coefficient). I think however there is rather good evidence from fission that even up to moderate excitations nuclei are <u>not</u> creepy.

Figure 11 shows Nix's calculations of the kinetic energy of fission fragments and an analysis of the total into pre-scission and post-scission contributions. The calculations were done with zero viscosity and you can see that for the heavier nuclei a very substantial part of the kinetic energy comes from the saddle-to-scission stage. Although the corresponding viscous calculations have not been done, it is surely true that if nuclei were creepy fragments would not begin to accelerate until somewhere close to scission and a substantially lower kinetic energy would result. The trend of the experimental points seems to exclude this possibility.

Thus, certainly $z \not> 1$ and, in fact, probably $z \ll 1$.

To confirm this, and possibly determine z, there is an outstanding need to repeat Nix's calculations--at least the kinetic energy release part--as a function of viscosity. This would clear up a fundamental question in nuclear macro-dynamics. Perhaps it will turn out that $z \approx 0$ is a good approximation and life would be that much easier when discussing the dynamics of heavy ion collisions and super-heavy element formation.

PINCH-OFF REACTIONS

Let me end with an example of some unexpected things one might find in the dynamics of the fusion of heavy nuclei, especially if the viscosity should turn out to be small.

I am referring to a partial-transfer or PINCH-OFF type of reaction, a prototype of which was found in Stan Thompson's group in Berkeley some years ago in experiments on the fusion of liquid drops. Liquid drops, like nuclei, are leptodermous systems, and provided one scales the units of time, mass and length appropriately, there is a lot to be learned from such studies.

The following phenomenon was observed. If a small drop of water is gently brought in contact with a much larger drop (in fact a plane surface of water) a rather violent fusion process takes place. The dynamics of the fusion turn out to be such that--quite unexpectedly --only part of the drop gets absorbed. (The part closest to the plane surface.) The rear part of the drop does not have time to follow the fusion dynamics and gets left behind. Figure 12 shows a sequence of frames from a movie which illustrates this.

Three interesting variations of this partial transfer or PINCH-OFF phenomenon have been found. First, if one increases the viscosity of the fluid--say if one goes from water to oil--the effect disappears. The small drop gets absorbed in a creepy way, as one would expect.

Second, if two equal drops are gently brought into contact, the effect also disappears. Figure 13 illustrates a sequence of photographs of the dynamics in this case. You can see that there is

an attempt by the system to pinch off two smaller drops from the two ends, but the attempt is unsuccessful.

Third, by a clever trick involving the use of gravity, one may try to study the effect that a volume electrification--such as is present in nuclei--would have on the partial transfer process. As expected the results suggest that the coulomb energy would tend to increase the fraction of the droplet that gets pinched off.

If one applies the proper scaling laws to go from liquid drops to nuclei, one ends up with the expectation that, provided the nuclear viscosity is not too large, such partial transfer reactions should occur following the contact of two nuclei (at bombarding energies close to the coulomb barrier). The effect is expected in particular if the two nuclei are unequal in size, but, because of the electrostatic repulsion, might well occur also in the case of comparable nuclei.

This leads to the following speculation, to be added to the long list of hypothetical reactions suggested in connection with super-heavy nuclei:

Bring together two heavy nuclei, e.g., Hg^{204} and Th^{232}, and hope that by a pinch-off reaction a large central super-heavy 114 nucleus is formed, with two smaller Ni fragments flying off. (See Fig. 14.)

Perhaps such a reaction would have a better chance of forming the 114 nucleus in a near-spherical shape than the very asymmetric binary fission that I mentioned earlier.

Let me summarize the main points of my talk.

1. I believe that a macroscopic approach to heavy-ion and fission physics, i.e., NUCLEAR MACRO-PHYSICS characterized by $A \gg 1$, is the appropriate starting point.
2. In the case of statics, the LEPTODERMOUS model $(A^{1/3} \gg 1)$ provides a simple starting point. A similar approach should be explored in the case of dynamics.
3. The question of the viscosity of nuclear matter is the outstanding problem in the dynamics. An analysis of the kinetic energy release in fission should provide a measurement of the nuclear CREEP PARAMETER and thus determine the viscosity.
4. As regards the use of heavy ions in attempts to make super-heavy nuclei, the extreme BRITTLENESS of the latter is the great danger.
5. Model experiments with liquid drops, if judiciously interpreted, may be helpful in understanding nuclear macro-dynamics, for example, the PINCH-OFF effect.

REFERENCES

* This work was supported by the U. S. Atomic Energy Commission.

1. S. G. Nilsson, C. F. Tsang, A. Sobiczewski, Z. Szymański, S. Wycech, C. Gustafson, I.-L. Lamm, P. Möller, and B. Nilsson, Nucl. Phys. A131, 67 (1969).
2. G. T. Seaborg, Ann. Rev. Nucl. Science 18, 53 (1968).
3. C. F. Tsang, Ph.D. Thesis, UCRL-18899 (1969).
4. D. L. Hill and J. A. Wheeler, Phys. Rev. 89, 1102 (1953).
5. E. Hilf and G. Süssmann, Phys. Letters 21, 654 (1966).
6. H. Lamb, Hydrodynamics, Sixth Edition (Dover Publications), Chapter XI.
7. H. Lamb, Hydrodynamics, Sixth Edition (Dover Publications), Eq. (15) on p. 641 and Eq. (11) on p. 475.
8. J. R. Nix, Further Studies in the Liquid-Drop Theory of Fission, UCRL-17958 (1968), to be published in Nucl. Phys.

FIGURE CAPTIONS

1. Three extreme types of heavy-ion reactions are located at the corners of a triangle in a plot with $A_{projectile}$ and A_{target} as axes. The inside of the triangle corresponds to cases intermediate between these "conventional", "inverse fission" and "overshoot" reactions.
2. In conventional reaction theory the configuration space is often thought of as divided into two regions: inside and outside of a potential energy barrier.
3. In reaction theory with two or more dimensions the role of a barrier is played by a "saddle point with one degree of instability" and the configuration space should be thought of as divided into three regions: inside, outside and neither.
4. A two-parameter family of shapes is specified by two overlapping or separated spheres. The internal surfaces are erased and the volume re-normalized to a standard value.
5. The two deformation parameters of the two-sphere family of shapes are plotted as polar coordinates r, θ. The circle $r = \infty$ corresponds to separated spheres, $r = 1$ to tangent spheres and the region $r < \frac{2}{\pi}|\theta|$ to a single sphere. For $\theta = 0$ the two spheres are equal, for $\theta = \pm 90^{\circ}$ one of the spheres is vanishingly small.
6. Energy map of two-sphere configurations for $x = 0$ (no charge on the system). An elevated glacier (white) overlooks the lake with spiral boundaries.
7. Energy map of two-sphere configurations for low charge (light nuclei). Two low regions are separated by a snow-capped mountain, with two passes on the edge of the map.

8. Energy map of two-sphere configurations for medium-weight nuclei. The mountain range separating the lake with spiral boundaries from the ocean in the upper part consists of two peaks and three passes.

9. Energy map of two-sphere configurations for heavy nuclei. The central pass (the fission barrier) across the mountain range separating the lake with spiral boundaries from the ocean is about to vanish.

10. Energy map of two-sphere configurations for super-heavy nuclei. The mountain range has been breached and (in the absence of shell effects) there would be no barrier against fission.

11. Comparisons of calculated and experimental most probable fission-fragment translational kinetic energies, as functions of the fissility parameter x. The dot-dashed curve gives the calculated energy acquired by the fragments between the saddle point and scission, the short-dashed curve that acquired after scission, and the solid curve the final total. If the motion of the drop between the saddle and scission were very viscous one would expect the results to follow the trend of the dashed curve. The fact that they don't suggests that viscosity is not large (see Nix's Ref. 8).

12. In the first frame (selected from a high speed movie sequence) a drop of water (or alcohol) is resting on a flat surface of the same medium, equivalent to another drop of infinite radius. (The small droplet on the left should be disregarded.) Contact between the drop and the flat surface is prevented by a layer of air. In the next frame the air has been squeezed out and fusion begins. The lower part of the drop is rapidly absorbed but the upper part does not have time to follow (frame #3) and gets left behind (frame #4).

13. Four frames showing the fusion of two equal drops (resting on a fluid surface but separated from it by a thin cushion of air). Fusion has begun in frame #2. In frame #3 two protuberances on either side of the central drop witness to the difficulty experienced by the far sides of the coalescing drops in following the dynamics of the fusion. Two smaller droplets are almost, but not quite, left behind; the result is a single drop (frame #4).

14. A hypothetical reaction suggested by studies of coalescing liquid drops. Two heavy nuclei come into contact and by a pinch-off reaction form a super-heavy nucleus and two smaller fragments.

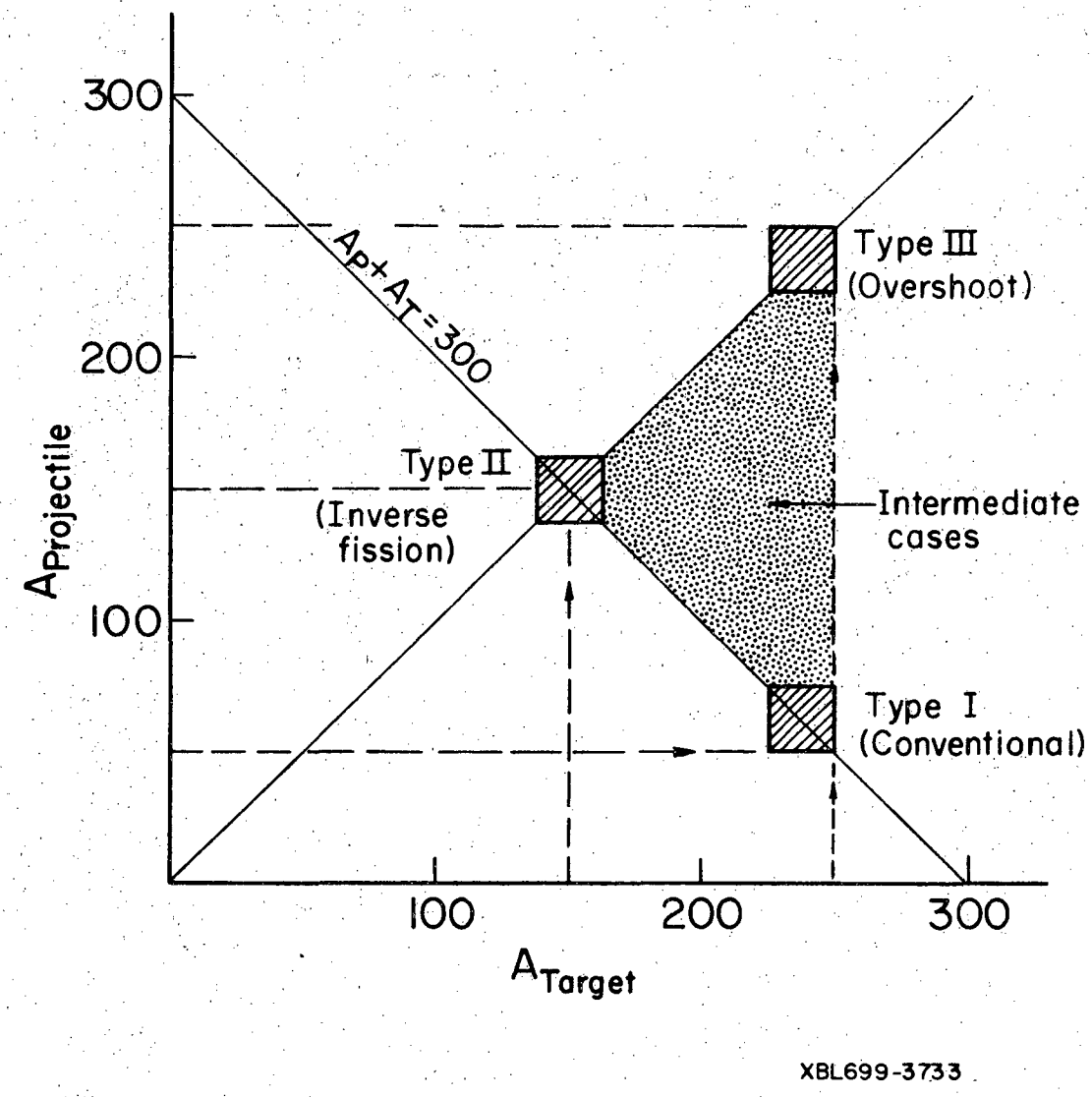
300
200
100
$A_{Projectile}$
$A_P + A_T = 300$
Type III
(Overshoot)
Type II
(Inverse
fission)
Intermediate
cases
Type I
(Conventional)
100
200
300
A_{Target}
XBL699-3733

Fig. 1

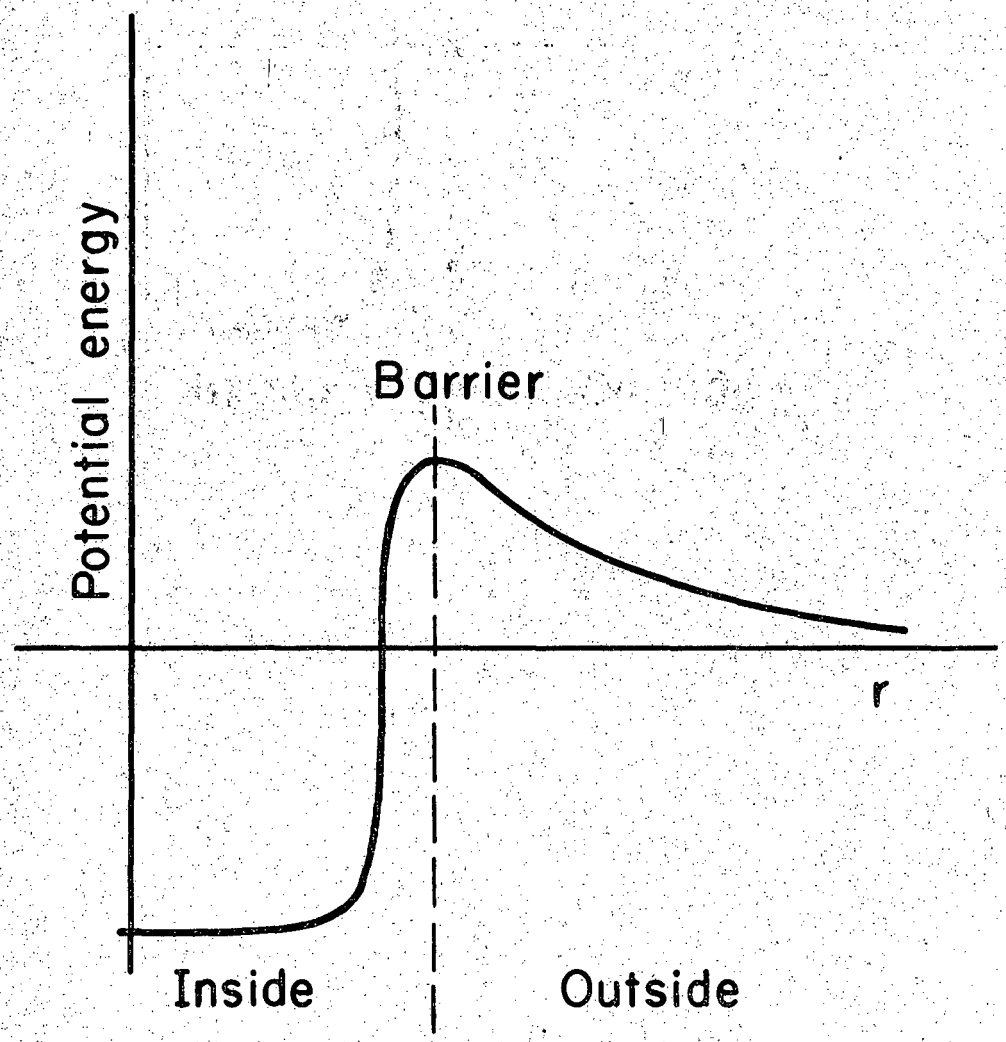

XBL699-3738

Fig. 2

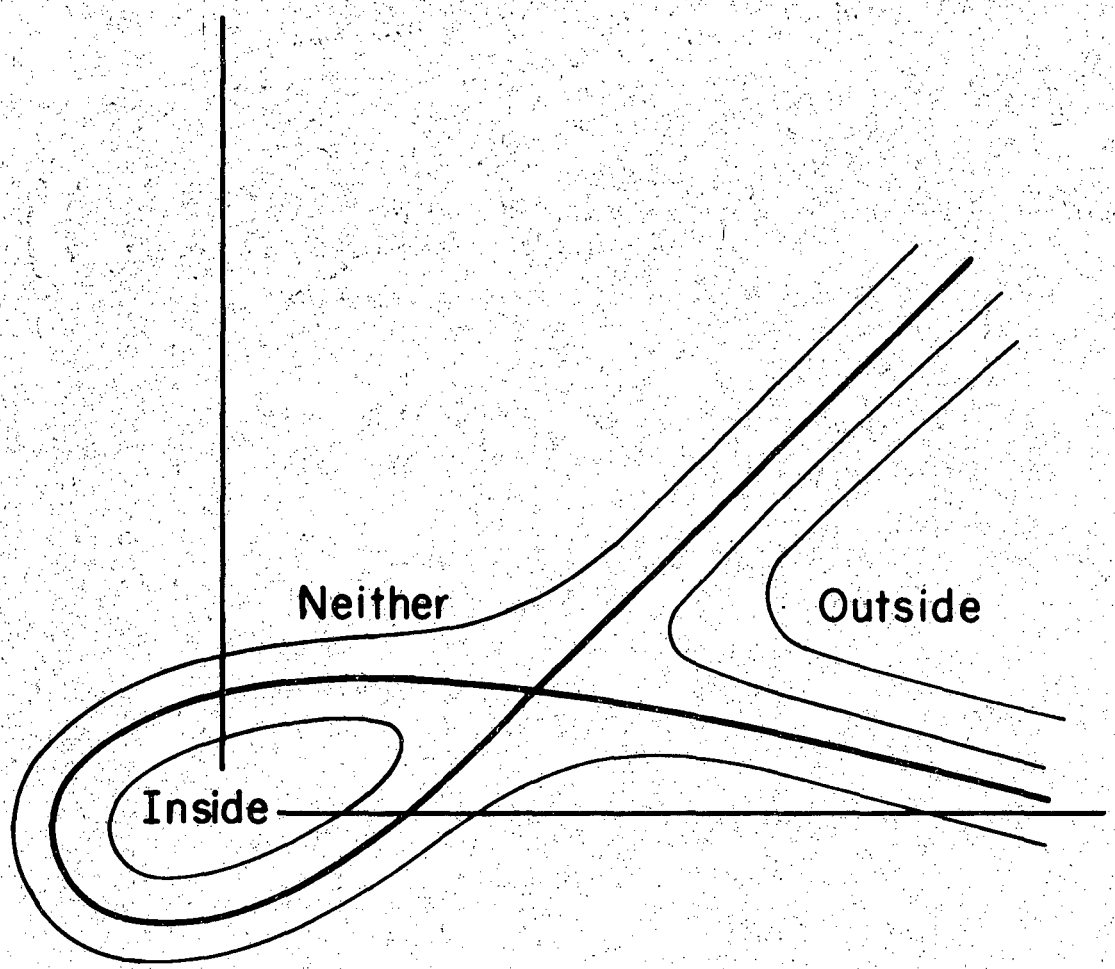

XBL699-3737

Fig. 3

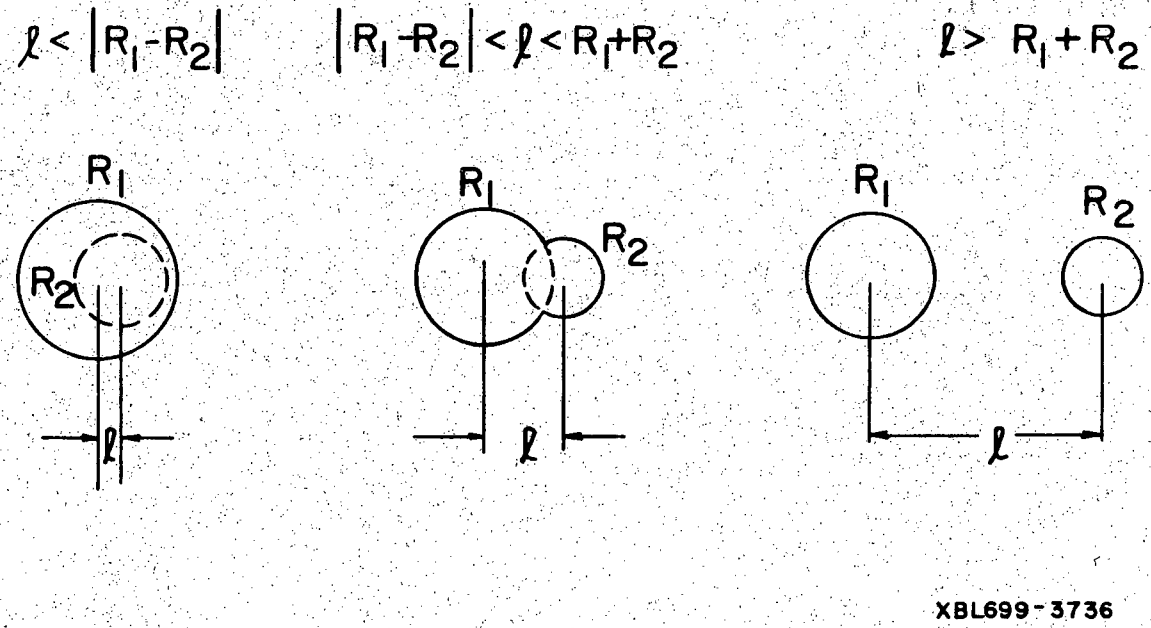
$\ell < |R_1 - R_2|$
$|R_1 - R_2| < \ell < R_1 + R_2$
$\ell > R_1 + R_2$
R_1
R_2
ℓ
R_1
R_2
ℓ
R_1
R_2
ℓ
XBL699-3736

Fig. 4

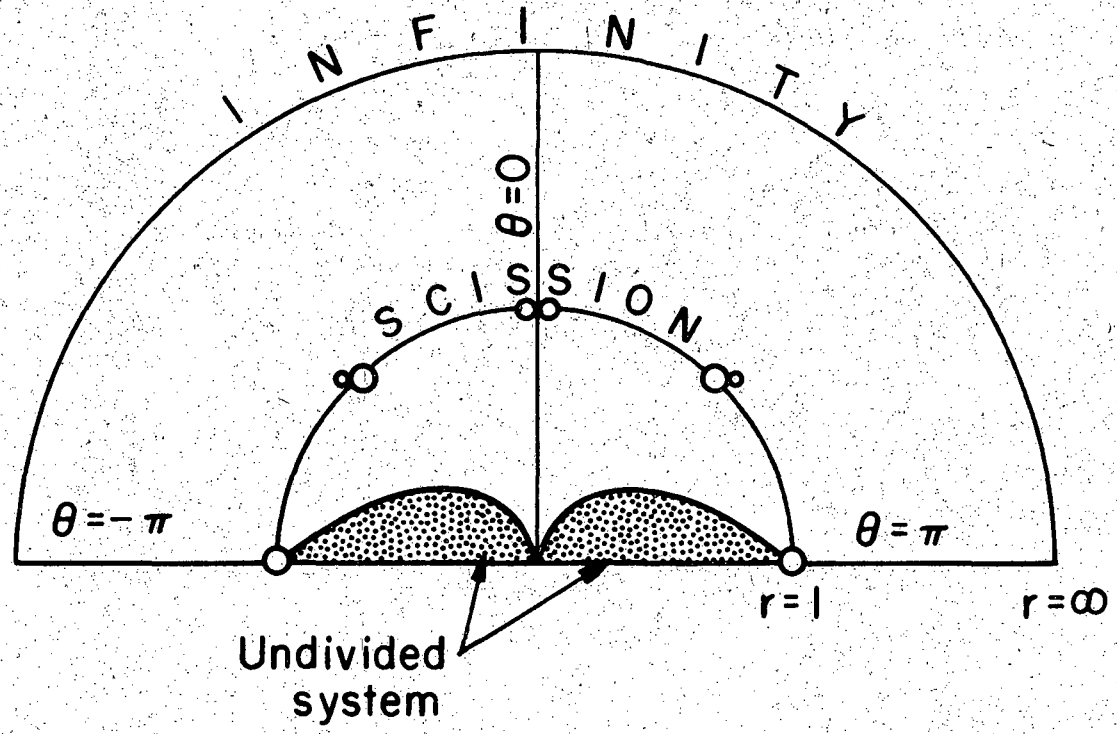

XBL699-3784

Fig. 5

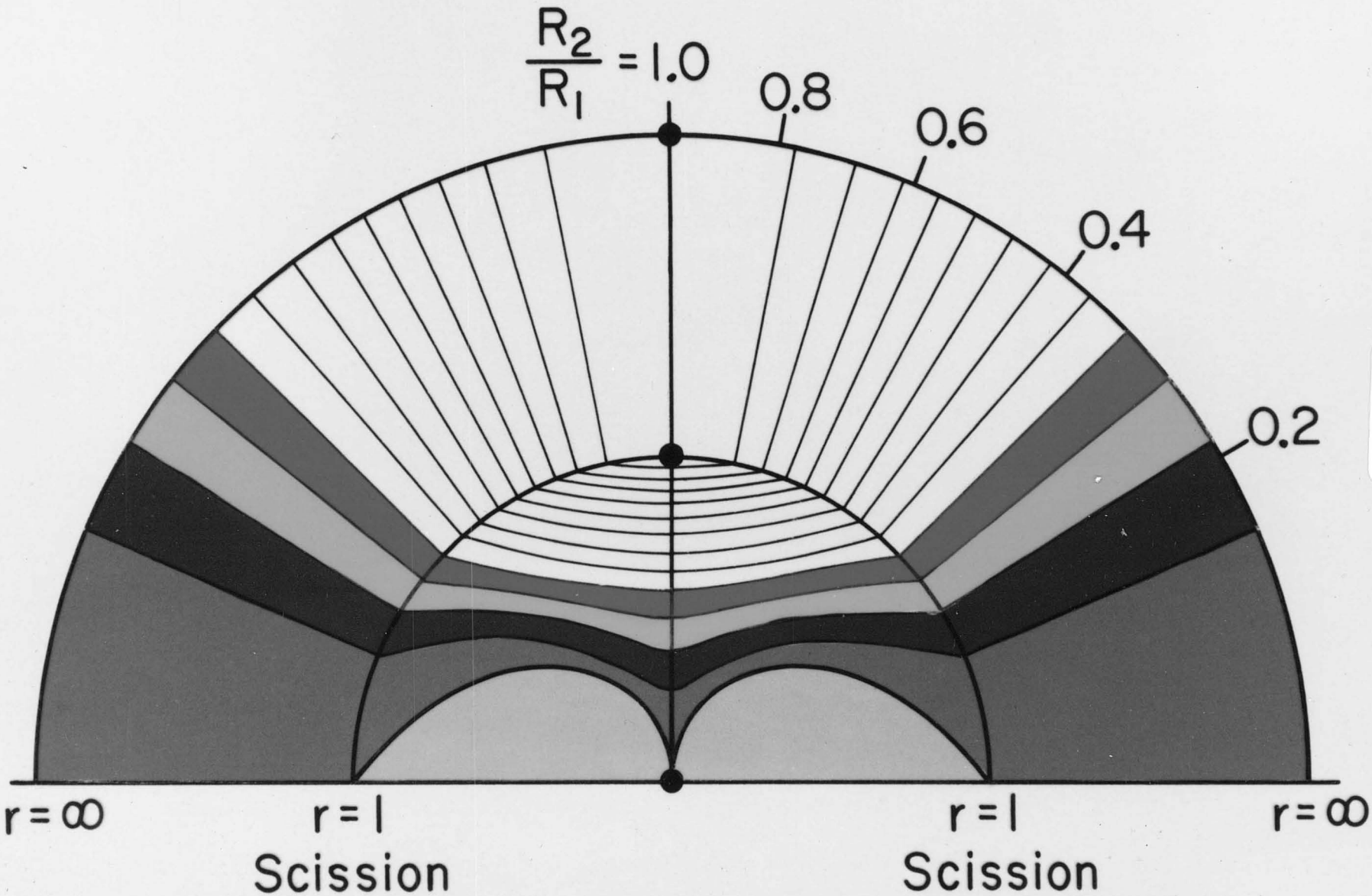

Fig. 6.

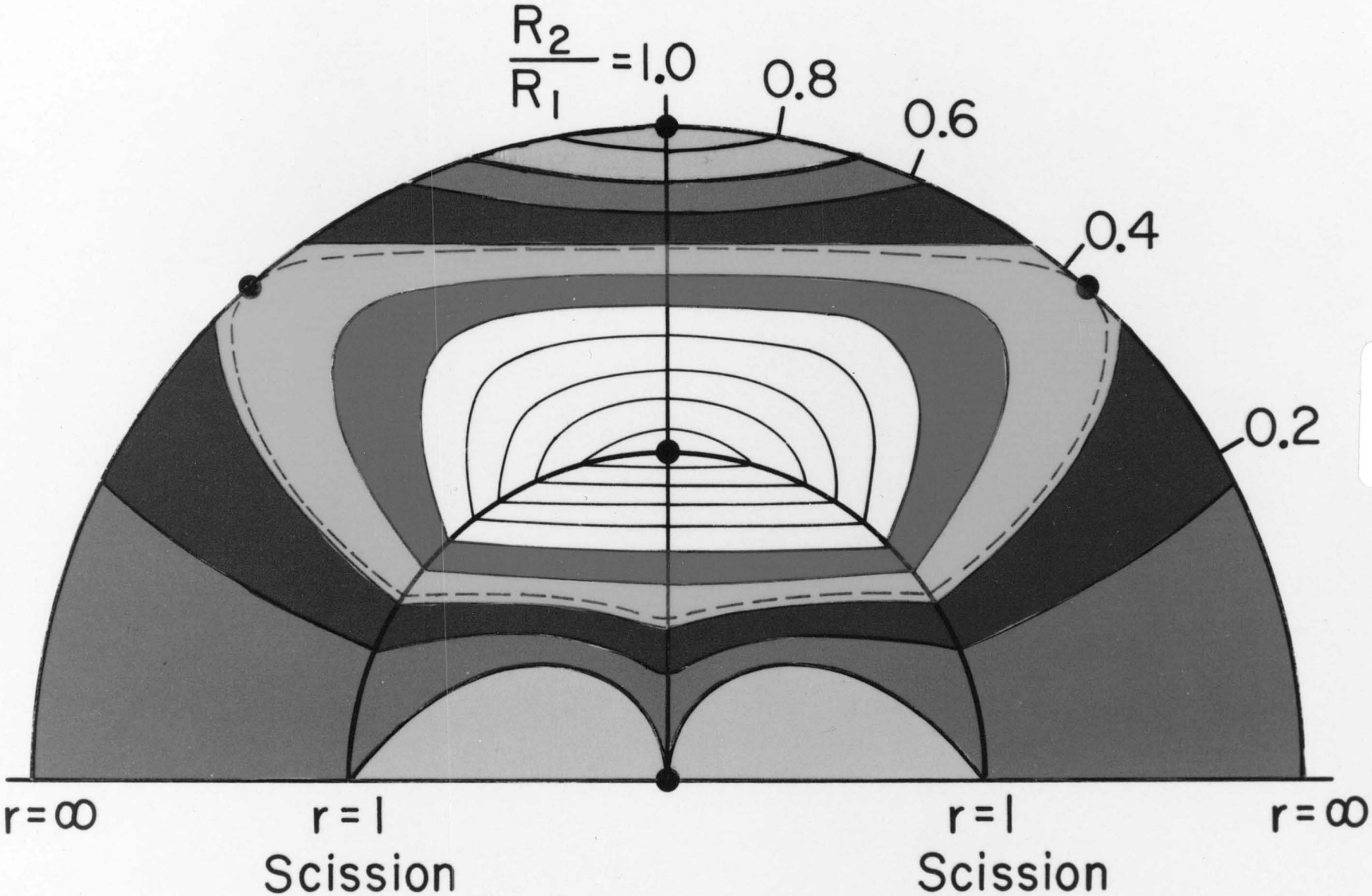

Fig. 7.

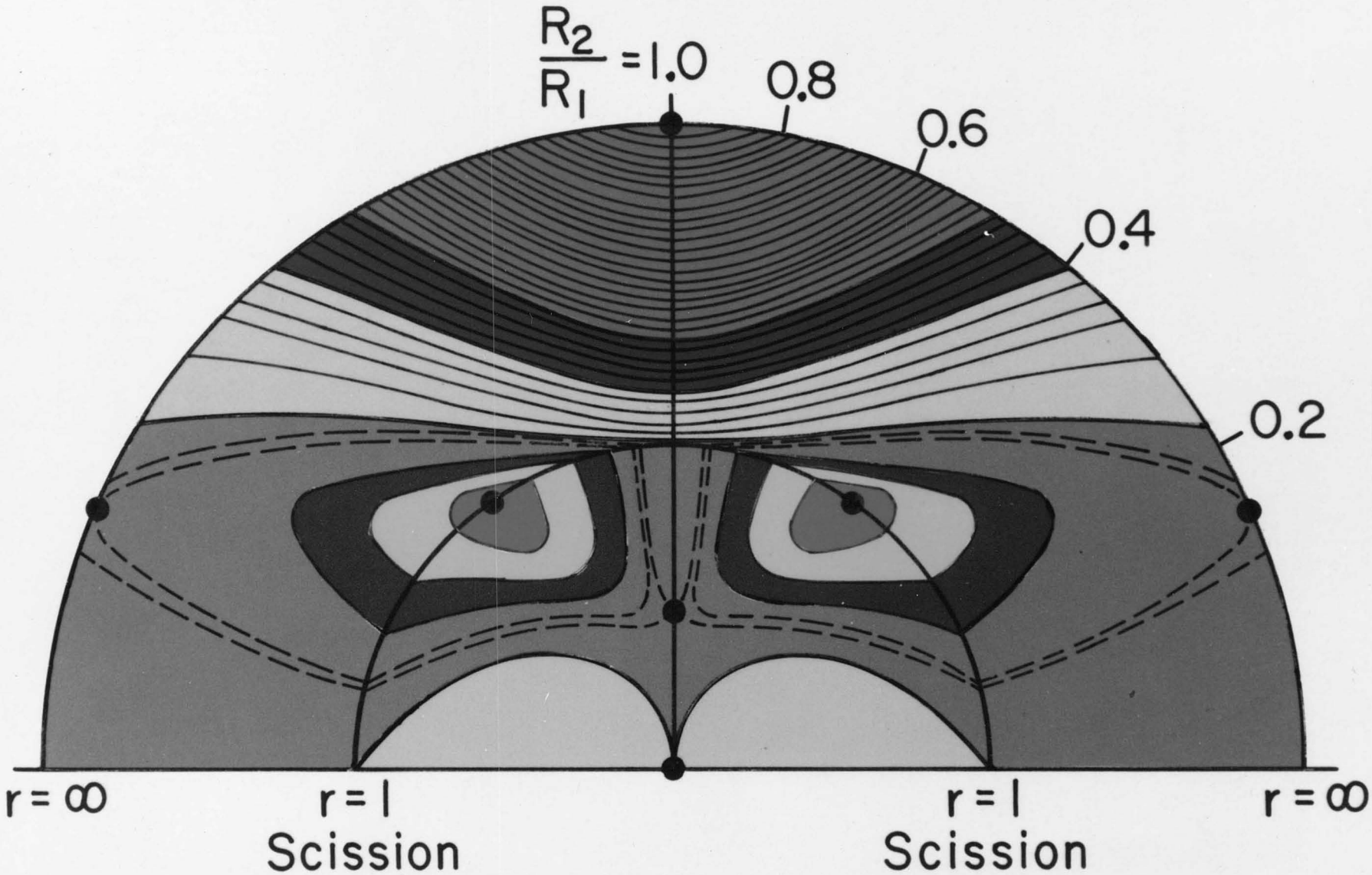

Fig. 9.

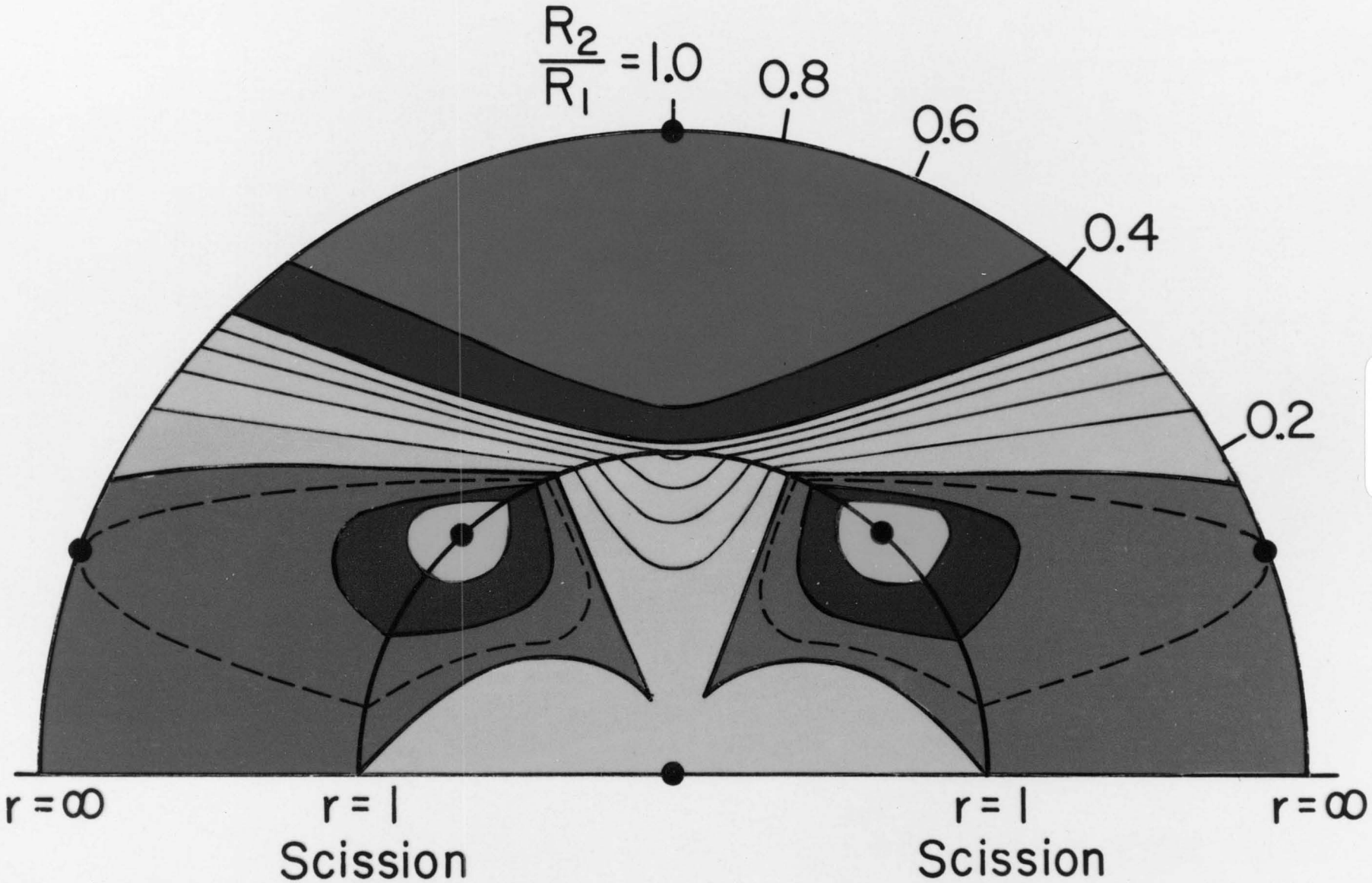

Fig. 10.

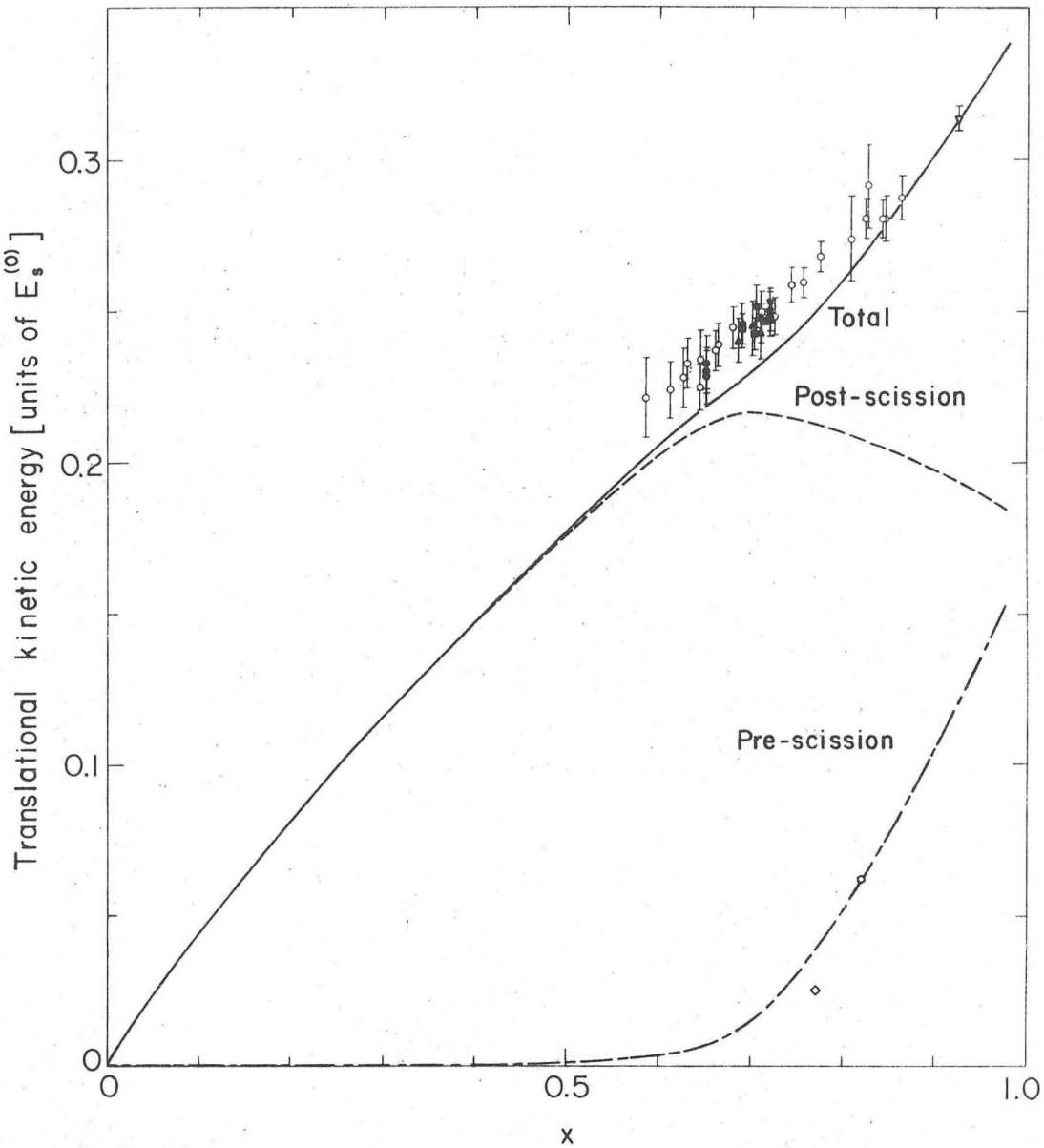

XBL678-3857

Fig. 11

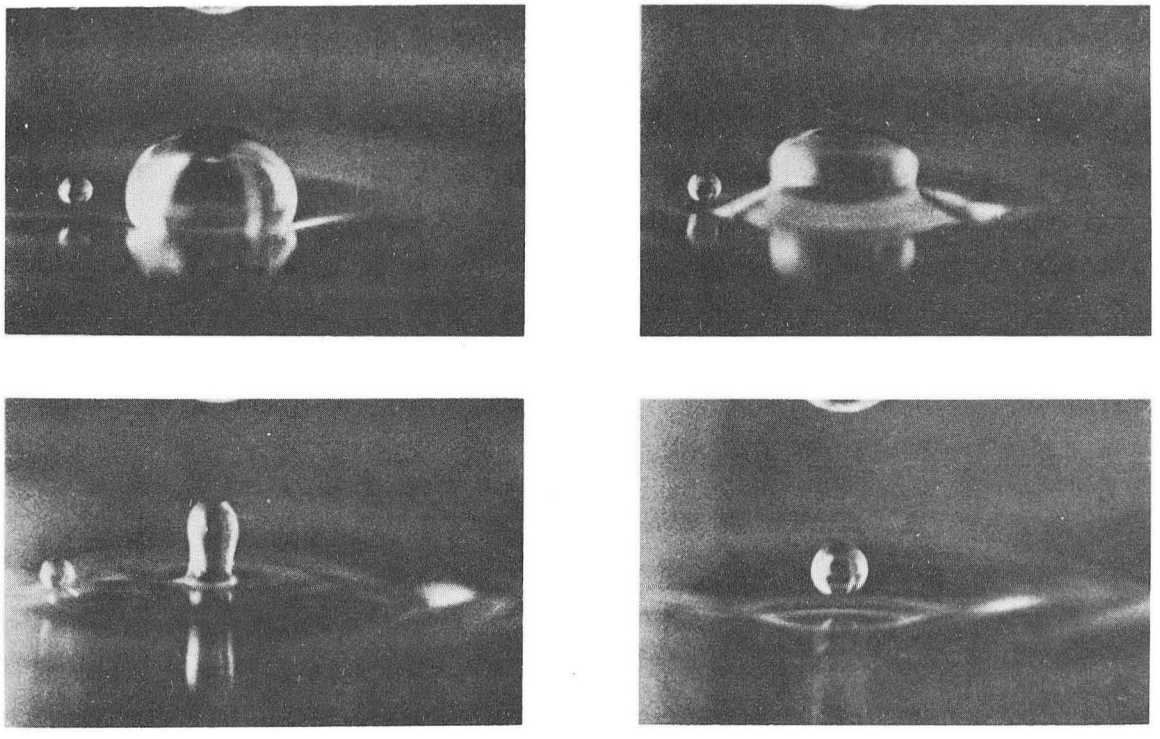

XBB 696-3865

Fig. 12

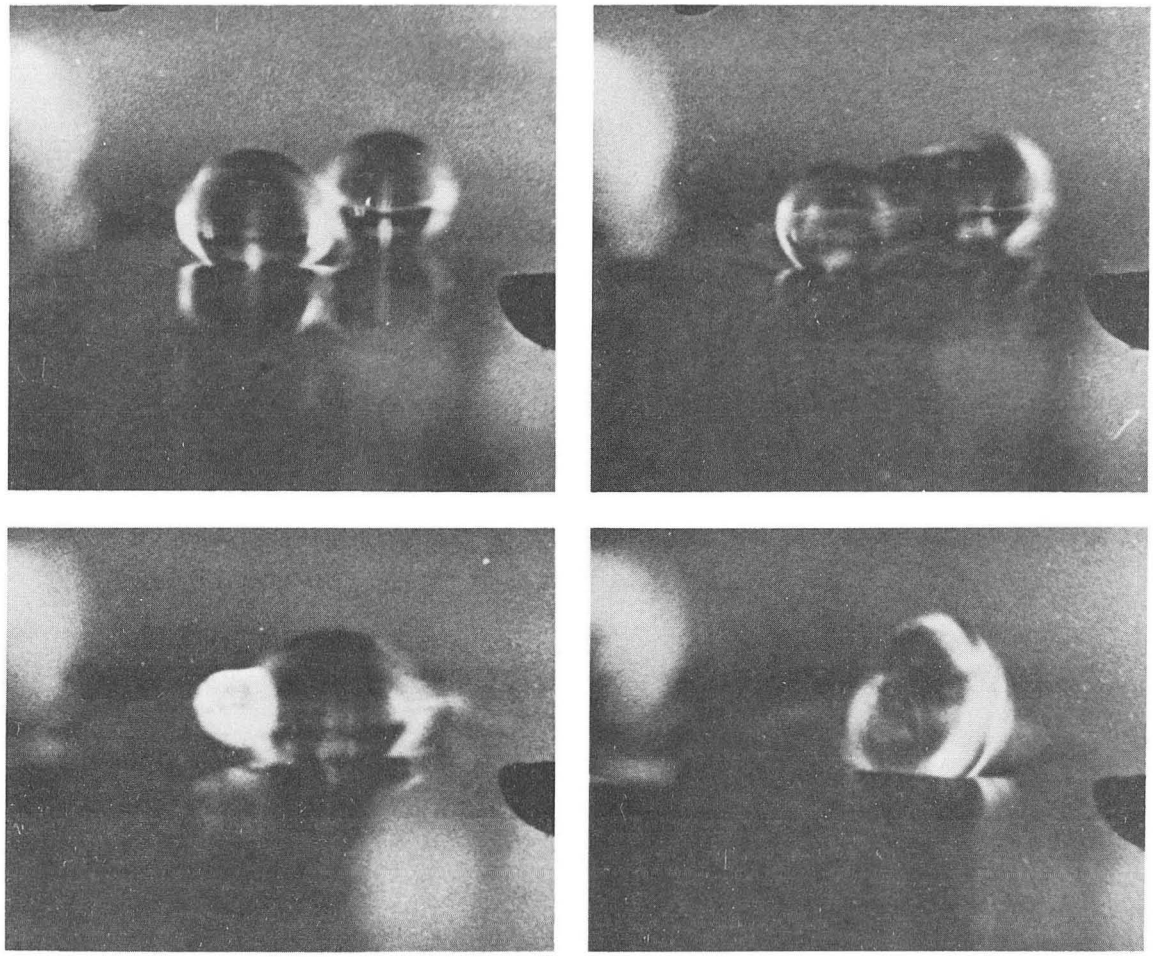

XBB 696-3864

Fig. 13

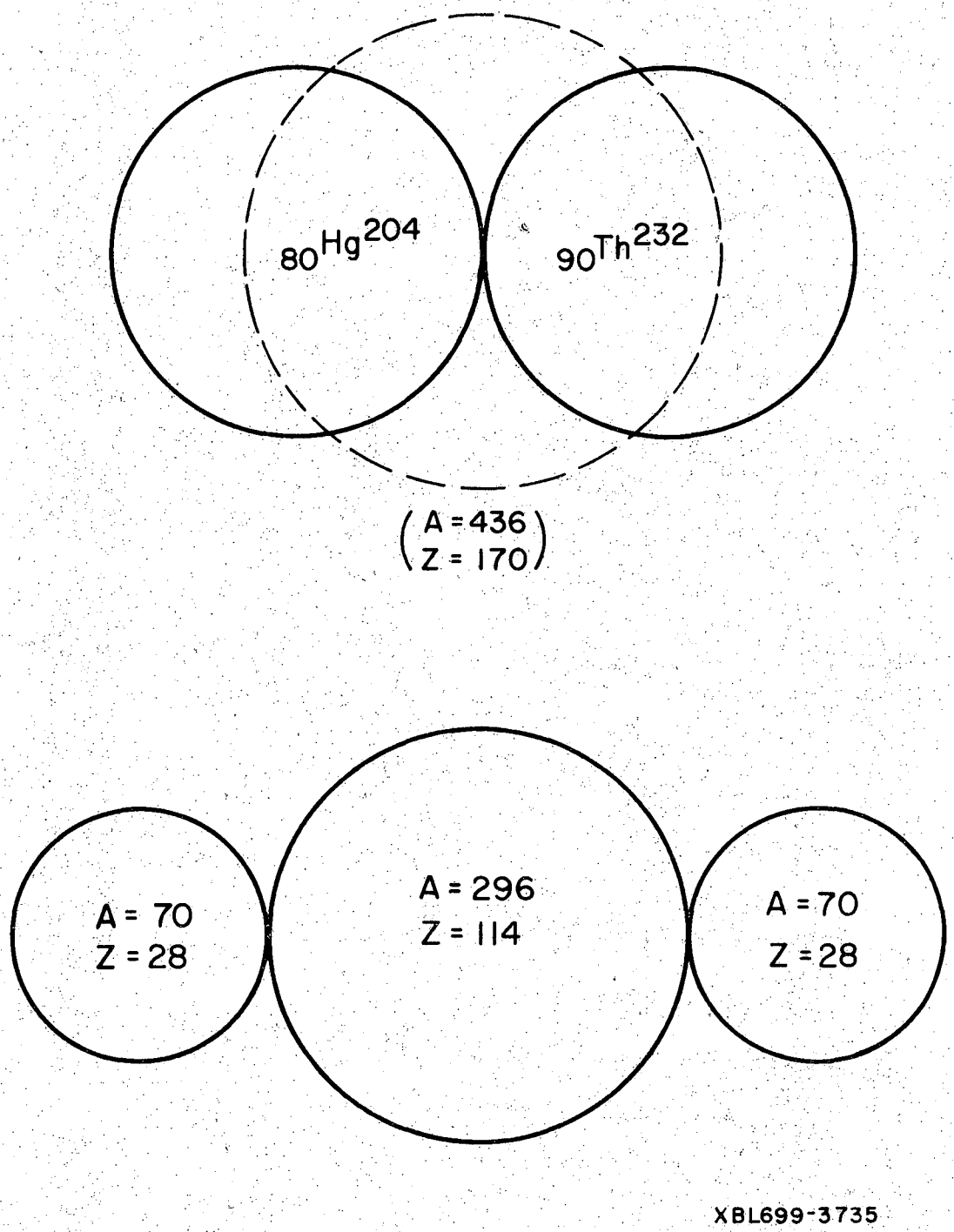
$_{80}Hg^{204}$
$_{90}Th^{232}$
A = 436
Z = 170
A = 70
Z = 28
A = 296
Z = 114
A = 70
Z = 28
XBL699-3735

Fig. 14

LEGAL NOTICE

This report was prepared as an account of Government sponsored work. Neither the United States, nor the Commission, nor any person acting on behalf of the Commission:

A. Makes any warranty or representation, expressed or implied, with respect to the accuracy, completeness, or usefulness of the information contained in this report, or that the use of any information, apparatus, method, or process disclosed in this report may not infringe privately owned rights; or

B. Assumes any liabilities with respect to the use of, or for damages resulting from the use of any information, apparatus, method, or process disclosed in this report.

As used in the above, "person acting on behalf of the Commission" includes any employee or contractor of the Commission, or employee of such contractor, to the extent that such employee or contractor of the Commission, or employee of such contractor prepares, disseminates, or provides access to, any information pursuant to his employment or contract with the Commission, or his employment with such contractor.

TECHNICAL INFORMATION DIVISION
LAWRENCE RADIATION LABORATORY
UNIVERSITY OF CALIFORNIA
BERKELEY, CALIFORNIA 94720