Submitted to Nuclear Instruments and Methods

UCRL-19444
Preprint

c. 2

TRACK-FINDING IN EMULSION PLATES WITH THE AID OF HIGH RESOLUTION SPARK CHAMBERS

RADIATION LABORATORY
MAR 17 1970
LIBRARY AND
DOCUMENTS SECTION

Philip M. Dauber, Lawrence H. Smith
and Michael A. Wahlig

January 1970

Contract No. W-7405-eng-48

TWO-WEEK LOAN COPY

This is a Library Circulating Copy which may be borrowed for two weeks. For a personal retention copy, call Tech. Info. Division, Ext. 5545

UCRL-19444

LAWRENCE RADIATION LABORATORY
UNIVERSITY of CALIFORNIA BERKELEY

37

DISCLAIMER

This document was prepared as an account of work sponsored by the United States Government. While this document is believed to contain correct information, neither the United States Government nor any agency thereof, nor the Regents of the University of California, nor any of their employees, makes any warranty, express or implied, or assumes any legal responsibility for the accuracy, completeness, or usefulness of any information, apparatus, product, or process disclosed, or represents that its use would not infringe privately owned rights. Reference herein to any specific commercial product, process, or service by its trade name, trademark, manufacturer, or otherwise, does not necessarily constitute or imply its endorsement, recommendation, or favoring by the United States Government or any agency thereof, or the Regents of the University of California. The views and opinions of authors expressed herein do not necessarily state or reflect those of the United States Government or any agency thereof or the Regents of the University of California.

TRACK-FINDING IN EMULSION PLATES WITH THE AID OF HIGH RESOLUTION SPARK CHAMBERS

Philip M. Dauber, Lawrence H. Smith, and Michael A. Wahlig

Lawrence Radiation Laboratory and
Space Sciences Laboratory,
University of California,
Berkeley, California 94720

January 1970

ABSTRACT

We have demonstrated that minimum ionizing tracks at near-normal incidence to an emulsion plate can be found rapidly and with near - 100% efficiency with the aid of high resolution optical spark chambers. The mean distance between predicted and found track locations was 150 μm. The mean difference between angles predicted by the spark chambers and measured in the double-sided emulsion plate was 1.4 mrad. We discuss the implications of these results for use in emulsion-magnetic spectrographs with maximum detectable momenta greater than 10^4 GeV/c.

I. INTRODUCTION

In the measurement of particle momenta by magnetic deflection, the use of nuclear emulsion plates at near-normal incidence is sometimes the most appropriate method for defining the trajectory. The extremely high spatial accuracy ($\lesssim 1\mu m$)of emulsion is particularly needed in cosmic ray experiments involving high particle rigidities, limited magnetic field integrals, and limited space and weight for the apparatus. The emulsion spectrograph technique[1] may also be applicable at future high energy accelerators. Fig. 1 shows a configuration which is appropriate for cosmic rays.

In experiments which measure relativistic $Z = 1$ particles incident on large areas($\gg 100$ cm^2) of emulsion it is generally necessary to have accurate location of the track prior to scanning. This follows from the difficulty of recognizing minimum ionizing tracks and from the usually low ratio of useful events to background tracks. In addition, accurate knowledge of the angle of the trajectory at its intersection with the emulsion is necessary for the rejection of spurious background tracks. These requirements are satisfied for a wide range of possible experiments by an arrangement (e.g., Fig. 1) including spark chambers (optical or wire readout) and double-sided emulsion plates poured on glass. The use of double-sided plates several millimeters thick provides a "single plate angular determination" accurate to 1-2 mrad which, combined with the better than 1 mrad resolution of the spark chambers, gives excellent background rejection.

The use of emulsions with spark chambers and a magnet to measure momentum was suggested by Daion and Volynskii[2] and by Alvarez and Humphrey.[3] Daion et al.[4] used a single-gap "spark counter" in a run with a single-sided

emulsion plate and were able to find 7 of 12 cosmic ray tracks at near-normal incidence to the plate, whereas 14 random searches yielded no candidates within their criteria. Several other workers[5] have successfully used spark chambers with emulsion stacks in which the trajectories were nearly parallel to the emulsions. The low track-finding efficiencies in these early applications as well as the $\lesssim 80\%$ efficiency achieved in our own early runs with conventional multi-gap spark chambers gave rise to some question as to the practicability of the technique. Recently Cowsik et al.[6] have described a spectrograph including emulsions, wide gap spark chambers, and a permanent magnet; the accuracy of prediction was quoted as being within an area of 1×1 mm.

We have carried out a test to demonstrate that minimum ionizing tracks at near-normal incidence to an emulsion plate can be found rapidly and efficiently with the aid of high resolution optical spark chambers. We describe the apparatus and procedure used in sections II and III below and present results in IV. Our conclusions and some discussion of possible applications of the method are given in section V.

II. APPARATUS

The apparatus used for our track-finding runs is shown in Fig. 2. In order to eliminate difficulties due to scattering in the apparatus, we defined a hard muon beam by means of a Cerenkov threshold counter and 15 cm of lead absorber. The Cerenkov counter, using air at 1 atm. as the radiator, set a threshold of 4 GeV for the incident muons. The rms multiple coulomb scattering angle of a 4 GeV muon passing through the emulsion plate is 0.7 mrad. The maximum angle of acceptance of the arrangement was about 15 deg.

Two identical spark chambers were used, one above and one below the emulsion plate. Each chamber contained four plates; the center plates were

tied together and pulsed with high voltage. The plates were spaced to form two 5 cm sparks whose centers were 15 cm apart.

Each plate consisted of two sheets of 33μm-thick aluminum foil stretched and glued to both sides of an aluminum ring 1 meter in diameter and 1.6 cm thick. The four plates were supported at three equidistant points inside a rectangular magnesium box. All sides of the chambers had glass windows made of 0.63 cm-thick paralleloplate with fiducial marks etched across the inside surface for optical calibration purposes. The top and bottom of the box were covered with 75 μm-thick aluminum foil plus a 250μm thick Mylar sheet. The chambers were filled with the usual 90% - 10% neon-helium mixture.

Each chamber was driven by its own four-stage Marx generator, mounted directly on the chamber box. The high voltage leads were brought through the sides of the box midway between the plates in a completely symmetric way in order to obtain equal spark intensities. The pulse applied to the spark chamber plates was typically about +45 kV.

The emulsion plates were poured specially for us by the Eastman Kodak Company on both sides of 0.225 × 20 × 20 cm glass, using NTB 3 emulsion. Relativistic tracks (1 GeV pions) produced 17 grains/100 μm of undeveloped emulsion. The emulsion thickness prior to processing was about 200μm and the shrinkage factor in processing was ≈1.7. The plate was glued with RTV (room temperature vulcanizing) cement to a stainless steel holder and made light-tight. Eight small fiducial lights (four for each view) were mounted at the corners of this holder. These lights had ≈200 μm-thick transparent crosses illuminated from behind with tiny incandescent bulbs. The crosses were placed obliquely so that the lights could be measured from above or photographed from the front.

The spark chambers and fiducial lights were viewed in 90 deg stereo by two 35 mm cameras with 135 mm focal length lenses located 3.6 m from the emulsion plate. In order to minimize the length of spark obscured by the front edges of the spark chamber plates, it was necessary to tilt each chamber slightly (Fig. 1) so that each camera lens lay in the central plane of both chambers. The average demagnification from real space to film was 25.

III. PROCEDURE

Two runs were made under similar conditions. The emulsion was processed in its holder. After it was processed, a pair of fine ($\approx 10\mu m$) orthogonal scratches was scribed in the emulsion surface. Their intersection, defined as the origin of coordinates, was measured with respect to each of the eight fiducial crosses. Then the emulsion plate was removed from its holder. In preparation for scanning, the scratches in the emulsion were aligned with the ways of the microscope stage and the scanner was given the coordinates and angles of the tracks to be found.

The track predictions were generated as described below. The film was measured on an LRL-SCAMP digitized measuring projector with 1 μm least count. In order to minimize inaccuracies due to operator setting error, each emulsion fiducial light was encoded four times and ≈ 15 points were encoded along each of the four sparks in each view.

The observed sparks are displaced from a straight-line trajectory because in each gap the primary ionization electrons drift toward the positive plate during the ~10 nsec rise time of the high voltage pulse. (There was no DC clearing voltage on the chambers.) Thus, there is a systematic shift of the observed spark locations proportional to the sine of the angle between the trajectory and the normal to the spark chamber plates. However, this shift

is equal and opposite in the two gaps of our chambers. Taking advantage of this symmetry, we averaged all the measured points for a chamber to define a "central point" along the projected trajectory. The intersection with the emulsion plane of a line joining the "central points" for the two chambers was the center of the search area.

As shown in Fig. 2, we photographed four fiducial lights in each view, each located at one corner of the emulsion plate. These lights were used to reconstruct the angle made by the camera axis with the emulsion plate. The intersection points of the projected trajectory with the lines joining the front and rear pairs of lights define a straight line in the emulsion plane for each view; the intersection of these latter lines in the emulsion scratch coordinate system is the point of intersection of the true trajectory with the plane of the fiducial lights. From this point and the measured projected angles of the track in each view, the predicted track location is calculated in the top layer of emulsion. Given the (measured) thickness of the emulsion plate glass at that location, and allowing for a 4 μm average gap between the last grain in the emulsion and the glass, it is possible to compute the projected deviations of the track between the emulsion layers. By the projected deviations of the track we mean the orthogonal horizontal components of the unobserved section of track as it traverses the glass.

An analysis of a large number of spark chamber pictures yielded 0.1 mrad as the rms uncertainty in the angle of each track. The uncertainty in location of a single spark is 70 μm and the total calculated position uncertainty of the projected particle trajectory at the emulsion plane is 52 μm. The latter figure includes random errors in measurement of the fiducials on the film but

does not include a possible systematic discrepancy between the centers of the fiducial crosses as seen by the measuring microscope and their apparent centers as seen (with back illumination) on the film.

The tracks were found in the top emulsion layer in "rectangular spiral" scans originating at the predicted track location. The average search required only 5-10 minutes. However, the maximum 1 mm^2 scan took an hour or more. Roughly 90% of the candidates were found on the first attempt; the others were found in rescans or in scans of the bottom layer by using the 30 ×, 3 mm working distance Koritska objective. Remeasurement of the spark chamber film was necessary in a few cases due to unusually large operator errors. Upon finding a candidate in one layer of emulsion (the criteria for a candidate were very loose), the scanner verified that the track went through to the other emulsion layer. She then carefully measured the projected deviations of the track between the layers; the distances measured were from the last grain in the top emulsion to the first grain in the bottom emulsion. The measurements were made on a Brower precision measuring microscope. Our preliminary criterion for acceptance of a track as "found" was that the X and Y projected deviations so measured each agreed with the predictions from the spark chambers to within 20 μm. This distance corresponds to 9 mrad agreement in angle.

IV. RESULTS

We were successful in finding all 93 tracks searched for in one run. In another run, 64 out of 65 tracks were found.

Figure 3b, c shows distributions of the differences between the predicted and found track locations for the 93 tracks of our principal run. The X and Y differences are plotted versus each other in Fig. 3a. The predicted locations include 0-80 μm corrections for refraction in the spark chamber

glass. Both the X and Y distributions are shifted slightly (by mean values of 35 and 60 μm respectively) from zero. We believe the shifts to be due mainly to the systematic uncertainties in measuring the fiducial lights mentioned above and to systematic errors in the refraction correction arising from uncertainty in the angles between the camera axes and the chamber glass.

The distributions are too flat to be well represented by a Gaussian curve. In addition the characteristic widths (±95 μm mean deviation from the mean) are about double what is expected from random errors associated with the spark measurements. We do not fully understand this discrepancy, but there are a number of small systematic errors which can contribute — microscope measuring errors, thermal expansion of the emulsion plate, shrinkage of the film, lens distortions, etc. (A 50 μm error in real space corresponds to only 2 μm on the film.) In any case, we note that >90% of the tracks were found within a rectangular box 400 μm on a side. After correction for the observed systematic shifts, the mean distance between predicted and found track locations is ≈150 μm.

In Fig. 4 we show distributions of the difference between predicted and measured deviations of the tracks between emulsion layers. An angle of 1 mrad corresponds to 2.25 μm deviation. The mean departure from zero (prefect agreement between prediction and measurement) in Fig. 4 is 3.2 μm for both X and Y, corresponding to a mean difference between angles predicted by the spark chambers and measured by the double-sided emulsion plate of 1.4 mrad. Uncertainty in the predicted angle of the track due to spark jitter plus spark and fiducial measurement error contribute $\lesssim$0.5 μm in Fig. 4. Additional contributions of ≈1 μm come from jitter in the actual location of the grains and random errors in the measurement of these grains. (These errors

could be reduced by fitting the tracks in the emulsion to a curved trajectory.) We believe that the remaining width of the distributions is due to systematic microscope measuring errors and small errors in relating the sparks to the emulsion coordinates, but we cannot rule out shifts of $\lesssim 2$ μm due to local distortion of the emulsion. However, we have no reason to suppose such shifts actually occur. We also note that >90% of the tracks lie within ± 8 μm in Fig. 4 (a) and (b) (±3.5 mrad in angle). The small width of the distributions in Fig. 4 in comparison to the possible spread of about ±100 μm allowed by the scanning criteria constitutes in itself conclusive evidence that we have found the right tracks and that there is no significant background.

V. CONCLUSIONS AND APPLICATION

In an actual experiment using the emulsion-spark chamber technique, one would adjust the size of the search area and the angle criteria in accordance with the random track background in the emulsion. For example, a 10 hr high altitude balloon flight plus 2 weeks of exposure to ground level cosmic rays would put 160 particles per steradian in the vertical direction into 1 mm^2 of emulsion. (only ~40 of these are due to the flight). With a ±4 mrad angle criterion and a 0.6×0.6 mm scan area, the probability of a scanning ambiguity[7] would be 3×10^{-3} per track. For our test run the probability of an ambiguity was about half this value.

However, it would be very difficult to maintain our spark chamber resolution with a compact optical system using mirrors such as would be suitable for a flight experiment. In addition, the track-finding accuracy for the setup of Fig. 1 would be somewhat worse that that of the test, being limited for the first plate scanned by the ~1 mrad angular resolution of a single chamber.

On the other hand, the development and use of liquid or solid state particle detectors[8] with spatial resolution of order 10 - 20 μm would lead to a background-rejection improvement for the emulsion technique of several orders of magnitude (the background rejection varies as the fourth power of the spark chamber resolution for a fixed spacing between sparks). This improvement would be useful for extended exposures in satellite-borne cosmic ray experiments.[9]

We conclude that minimum-ionizing tracks at near-normal incidence can be found rapidly and with near-perfect efficiency in emulsion plates with the aid of optical spark chambers. The use of high resolution wide-gap chambers and emulsion poured on both sides of glass plates permits specification of the angle of incidence to within a few milliradians. This technique provides adequate rejection against background tracks to permit the use of emulsion-magnetic spectrographs in a wide range of applications.[1,6]

As an illustration of the potential of the emulsion spectrograph technique we shall discuss the arrangement of Fig. 1 (most of which is built), which has the ability to detect momenta $\gtrsim 10^4$ GeV/c. A superconducting magnet with a clear cylindrical core of 1 m and a field integral of ~10 kG-m is used.[10] The four emulsion plates are supported in pairs by a lattice-type structure and contained in a temperature-controlled box. The spark chambers described above are mounted above and below the emulsion support structure.

Alignment could be carried out by optical metrology techniques. For example, the angles between plates can be measured to better than 5×10^{-5} rad (10 arc-sec) by autocollimation. Measurements of relative positions of the two plates held by one end-frame can be made to several μm with a large granite stage built by our UCBSSL-LRL group. This stage, which is also used for scanning and track measurement on large emulsion plates, has a 0.5×0.5

m travel and laser interferometer readout to an accuracy <1 μm. A subsequent publication will describe the stage, associated optics and electronics, and its operation under computer control.

We have conservatively estimated the maximum detectable momentum (100% resolution) for the spectrograph shown in Fig. 1 to be 6000 GeV/c if only the deflection angle is used to estimate the momentum. This estimate is based on 5 μm rms uncertainty in the relative position of points in adjacent plates. (The adjacent plates of each pair are 20 cm apart.) Fitting the trajectory through four plates with a gap of 2 m between pairs and position measurements of the pairs to <25 μm would increase the maximum detectable momentum to $\gtrsim 10^4$ GeV/c. The thermal and mechanical stability of the system must be maintained or monitored such that the above tolerances are held. Preliminary work with the elements of the spectrograph described here has indicated that such a device can be made to work without any additional major technical developments.

The speed of track-finding might be increased greatly with the following two innovations. Use of an objective lens vibrating vertically faster than the persistence of vision (at 60 Hz) can reduce the finding time for tracks within a few degrees of vertical by a factor ~5.[1,11] Automation of the microscope stage motion plus putting the data input and output under control of a small digital computer reduces the tasks of the scanner to the actual recognition of tracks and the recording of points. With these improvements, times of several minutes per track per plate are possible, and experiments involving thousands of events become practical.

ACKNOWLEDGMENTS

The authors wish to thank Dr. Luis W. Alvarez for his unflagging support and encouragement of this work. The contributions of Drs. A. Buffington and R. Muller are much appreciated. We are grateful to Carol Brow for scanning and measuring the film and the emulsion plates, to Thomas Coen for processing of emulsions, and to Bill Worthington for his operation of the Brower microscope.

We wish to thank the Eastman Kodak Company for producing large double-sided emulsion plates especially for us and for their cooperation and assistance over the past three years.

FOOTNOTES AND REFERENCES

1. Some considerations involved in applying the emulsion spectrograph technique on a large scale are discussed in P. M. Dauber, L. H. Smith, M. A. Wahlig, R. Muller, UCRL Group A Note No. 665 (1968), unpublished. The first normal incidence emulsion spectrograph (no spark chambers) was described and used by A. J. Apostolakis and I. Macpherson, Proc. Phys. Soc. A70, 146 (1957).

2. M. I. Daion and V. Rh Volynskii, JETP 37, 906 (1959), Soviet Phys. JETP 10, 648 (1960).

3. L. W. Alvarez and W. E. Humphrey. Proposal for High Altitude Particle Physics Experiment, UCBSSL No. 192, 1964 (unpublished).

4. M. I. Daion, V. B. Eliseev, and M. A. Kazaryan, JETP 50, 376 (1966), Soviet Phys. JETP 23, 250 (1966).

5. A. S. Dvoretskii et al., Nucl. Instr. Methods 20, 277 (1963); B. G. Duff, D. A. Garbutt, and W. T. Toner, Nucl. Instr. Methods 29, 351 (1964); and R. Golden and L. H. Smith, Determination of Charged Particle Trajectories by the Combined Use of Spark Chambers and Nuclear Emulsions, UCBSSL PPP Memo No. 33, 1966 (unpublished).

6. R. Cowsik et al, (Tata Institute of Fundamental Research), A Magnet Spectrograph for Primary Cosmic Ray Studies, paper presented at the 11th International Conference on Cosmic Rays, Budapest, Hungary (1969).

7. Such ambiguities by themselves are not a serious problem because the event can simply be thrown away without biasing the experiment. In addition one would resolve most of the scanning ambiguities by means of a constrained fit to the trajectory through the entire spectrograph. Biases in measuring steeply falling momentum spectra can occur, however, if bona-fide tracks are missed by the scanner and background tracks measured instead.

8. See, e.g. S. Derenzo, R. Muller, R. Smits, L. W. Alvarez, The Prospect of High Spatial Resolution for Counter Experiments: A New Particle Detector Using Electron Multiplication in Liquid Argon, Lawrence Radiation Laboratory Report UCRL-19254 (1969), unpublished.

9. The proton background for a 1 week circular Apollo orbit at 220 n. miles and 28.9 deg inclination is $\sim 10^7$ protons/cm^2 above 50 MeV kinetic energy (W. Breazeale, private communication). Assuming isotropy we find 10^4 protons/mm^2/sr/ week as compared to the 160 particles of the example given in the text. The corresponding ambiguity rate in this case is ~ 20%. This rate would be reduced by an order of magnitude

by fitting the entire trajectory. In any case, plates with intense background require measurement of many spurious tracks.

10. Clyde E. Taylor, A Lightweight, 1-Meter - Diameter, 12 KG Superconducting Magnet System for a Balloon-Carried Cosmic Ray Experiment, Lawrence Radiation Laboratory, Report UCRL-70285, 1967 (unpublished).

11. R. Smits, Emulsion Scanning with a Vibrating Lens, UCBSSL PPP Memo No. 50, 1967 (unpublished). Non-vertical tracks require oblique vibration or image-shifting optics, whose development has not been completed.

Figure Captions

Fig. 1. Emulsion spectrograph for measuring cosmic ray particle momenta up to 10^4 GeV/c. The trajectory is first reconstructed from the spark chamber photographs; the resultant information is used to find the particle track in each of the four glass-backed double-sided emulsion plates. A much more accurate trajectory is then obtained.

Fig. 2. Apparatus used for track-finding test as seen in either orthogonal stereo view (not to scale). Back-illuminated fiducial crosses are mounted at the corners of the emulsion plate holder and photographed with the sparks.

Fig. 3. (a) Scatter plot of differences in orthogonal coordinates between spark chamber predictions and measurements in the emulsion for 93 cosmic ray muon tracks. (b) and (c) show the distributions of these differences projected onto the X and Y axes of the emulsion plate.

Fig. 4. Distributions of differences between spark chamber predicted and measured deviations of the track from top to bottom of the double-sided emulsion plate. The tracks were projected onto the emulsion plane and then reprojected onto orthogonal axes X and Y. These distributions are centered at zero because systematic errors have been corrected. An angle of 1 mrad corresponds to 2.25 μm in these plots.

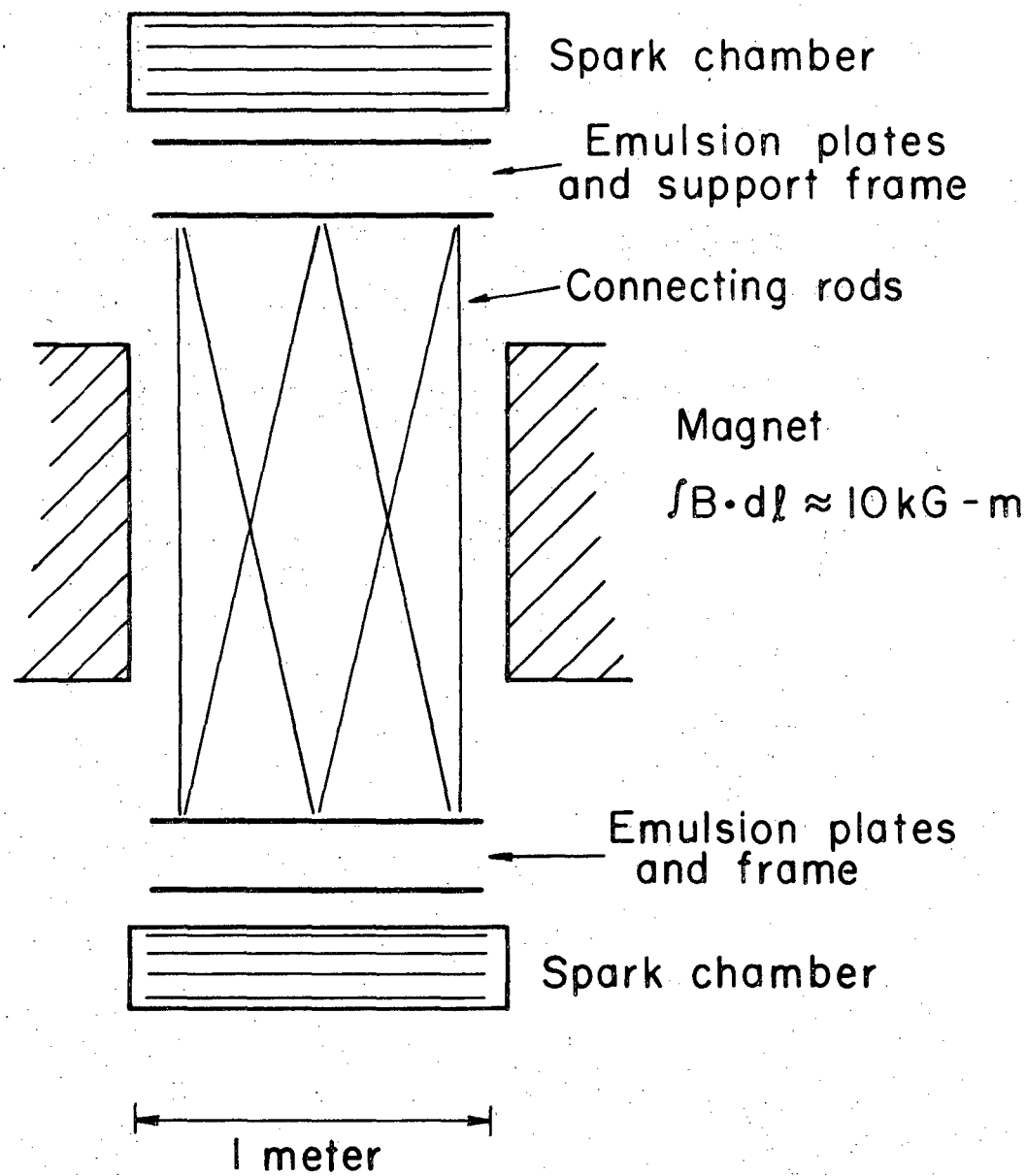

XBL701 - 2254

Fig. 1

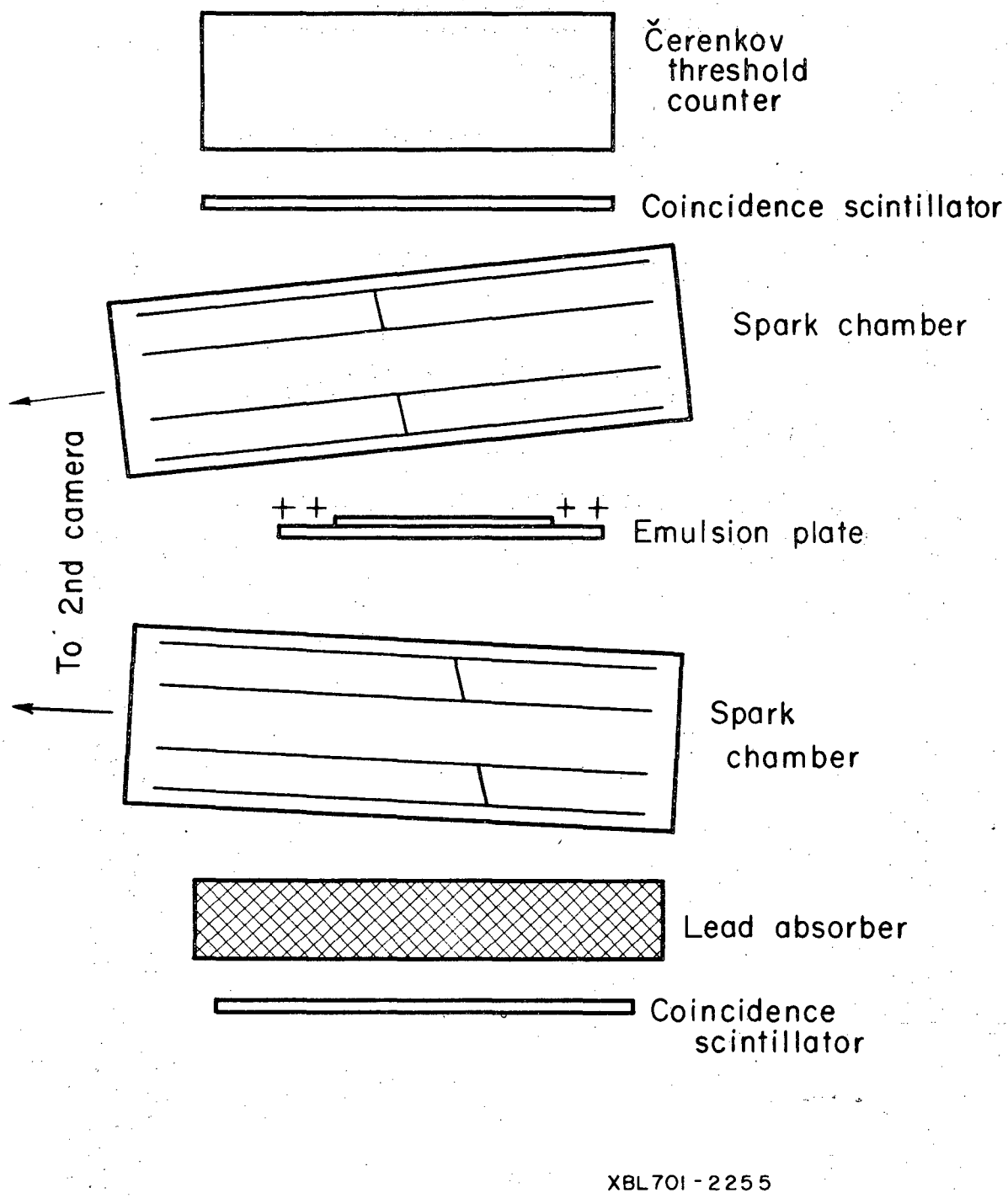
Čerenkov threshold counter
Coincidence scintillator
Spark chamber
To 2nd camera
Emulsion plate
Spark chamber
Lead absorber
Coincidence scintillator
XBL701-2255

Fig. 2

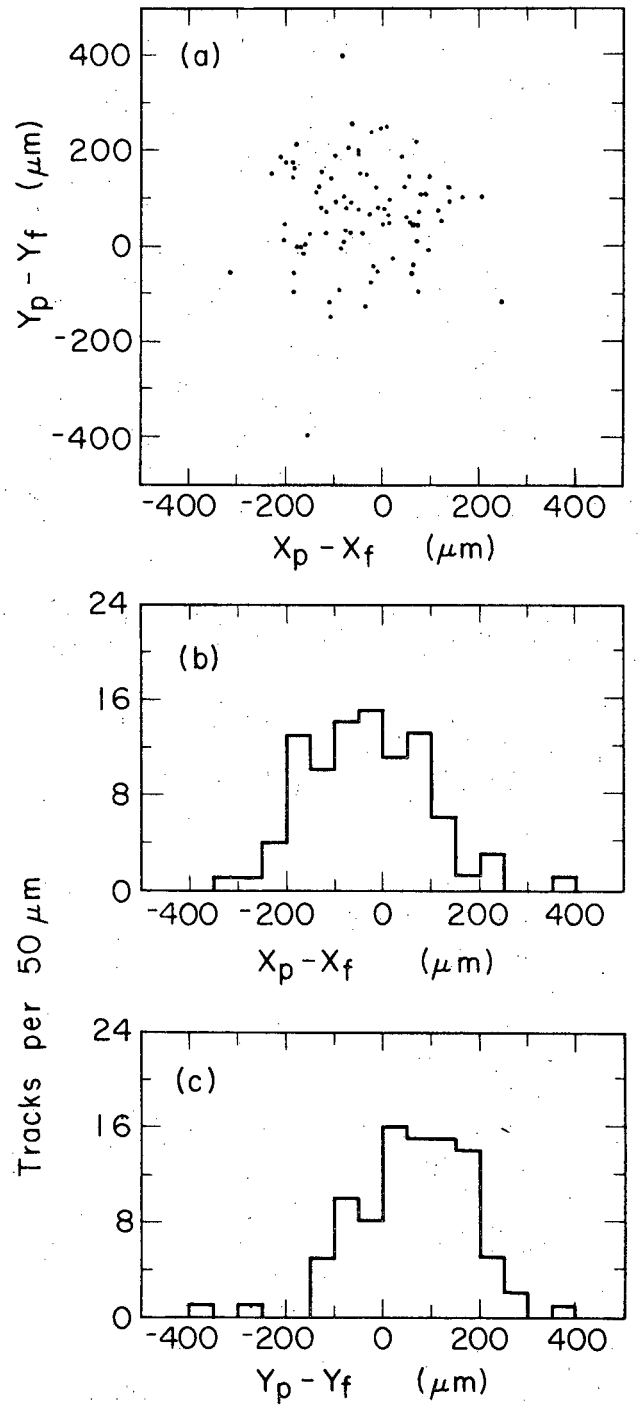

XBL701-2256

Fig. 3

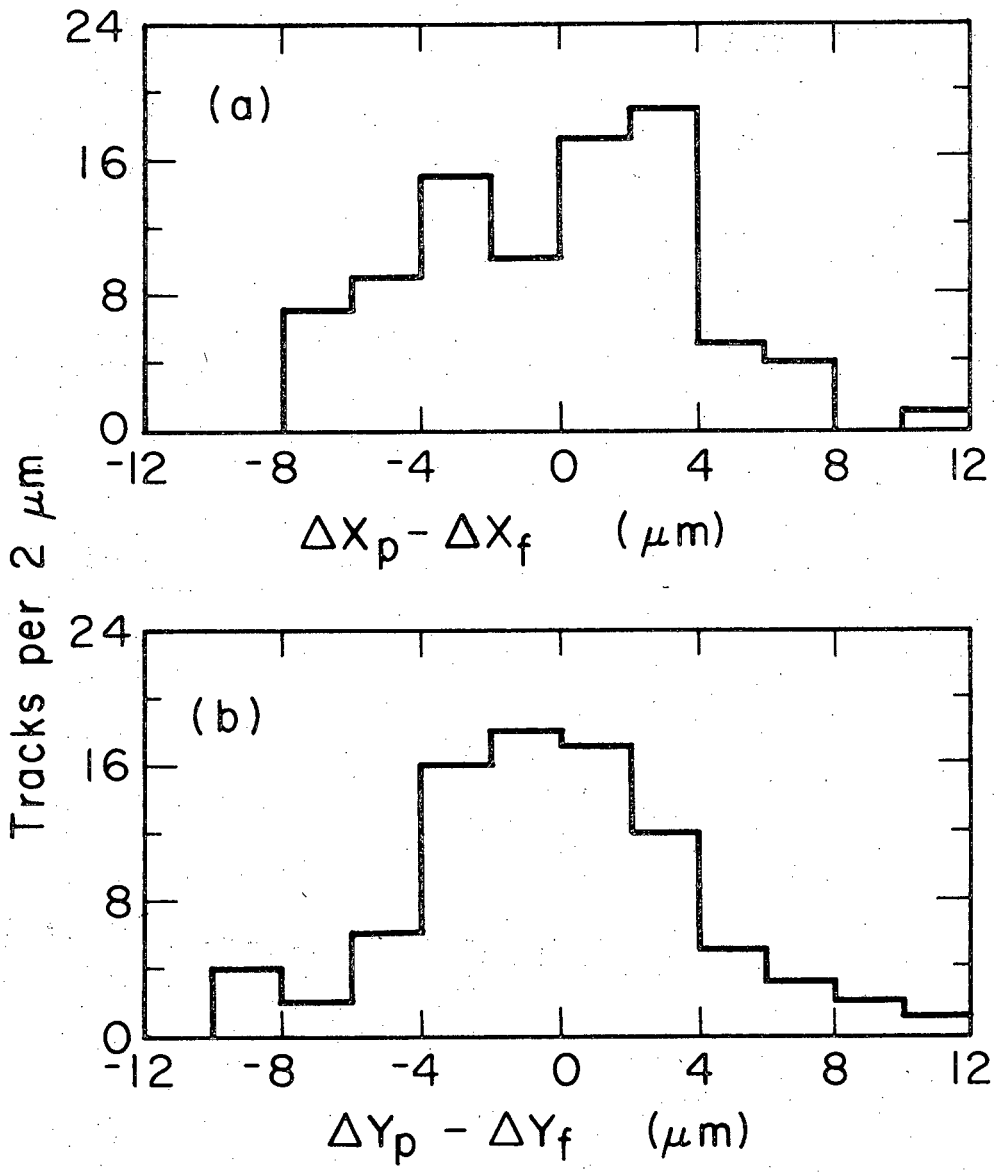

XBL 701-2257

Fig. 4

LEGAL NOTICE

This report was prepared as an account of Government sponsored work. Neither the United States, nor the Commission, nor any person acting on behalf of the Commission:

A. Makes any warranty or representation, expressed or implied, with respect to the accuracy, completeness, or usefulness of the information contained in this report, or that the use of any information, apparatus, method, or process disclosed in this report may not infringe privately owned rights; or

B. Assumes any liabilities with respect to the use of, or for damages resulting from the use of any information, apparatus, method, or process disclosed in this report.

As used in the above, "person acting on behalf of the Commission" includes any employee or contractor of the Commission, or employee of such contractor, to the extent that such employee or contractor of the Commission, or employee of such contractor prepares, disseminates, or provides access to, any information pursuant to his employment or contract with the Commission, or his employment with such contractor.

TECHNICAL INFORMATION DIVISION
LAWRENCE RADIATION LABORATORY
UNIVERSITY OF CALIFORNIA
BERKELEY, CALIFORNIA 94720