Submitted to Physical Review

UCRL-19457
Preprint

c.2

RECEIVED
LAWRENCE
RADIATION LABORATORY

MAY 4 1970

LIBRARY AND
DOCUMENTS SECTION

RELATION BETWEEN THE MULTI-REGGE MODEL AND THE ABFST PION-EXCHANGE MULTIPERIPHERAL MODEL

Geoffrey F. Chew, Terence Rogers, and Dale R. Snider

January 1970

AEC Contract No. W-7405-eng-48

TWO-WEEK LOAN COPY

This is a Library Circulating Copy which may be borrowed for two weeks. For a personal retention copy, call Tech. Info. Division, Ext. 5545

UCRL-19457

LAWRENCE RADIATION LABORATORY
UNIVERSITY of CALIFORNIA BERKELEY

DISCLAIMER

This document was prepared as an account of work sponsored by the United States Government. While this document is believed to contain correct information, neither the United States Government nor any agency thereof, nor the Regents of the University of California, nor any of their employees, makes any warranty, express or implied, or assumes any legal responsibility for the accuracy, completeness, or usefulness of any information, apparatus, product, or process disclosed, or represents that its use would not infringe privately owned rights. Reference herein to any specific commercial product, process, or service by its trade name, trademark, manufacturer, or otherwise, does not necessarily constitute or imply its endorsement, recommendation, or favoring by the United States Government or any agency thereof, or the Regents of the University of California. The views and opinions of authors expressed herein do not necessarily state or reflect those of the United States Government or any agency thereof or the Regents of the University of California.

UCRL-19457

RELATION BETWEEN THE MULTI-REGGE MODEL AND THE ABFST PION-EXCHANGE MULTIPERIPHERAL MODEL*

Geoffrey F. Chew, Terence Rogers+, and Dale R. Snider

Department of Physics and Lawrence Radiation Laboratory
University of California, Berkeley, California

January 30, 1970

ABSTRACT

The 1962 ABFST multiperipheral model, with a kernel based on an up-to-date guess for the elastic $\pi\pi$ cross section, is used to illuminate certain controversial concepts that have arisen in multi-Regge models. The small magnitude of the elastic $\pi\pi$ cross section above the region of prominent resonances is related to the small diffraction dissociation cross section and to the small pomeron coupling constant in the CP model. Although lower trajectories in the multi-Regge kernel give an inadequate representation of low-subenergy resonances, we show that an artificial CP model input can be found which roughly simulates the resonance component of the ABFST kernel. By products of our investigations are: (1) A generalization of the Berestetsky-Pomeranchuk formula that provides a practical basis for exact numerical evaluation of the ABFST model at any energy. (2) A perturbative analysis of diffractive dissociation (d.d) which reconciles a small d.d. cross section at accessible energies with a total cross section that becomes entirely of the d.d. type in the extreme high-energy limit.

I. INTRODUCTION

An attempt has been made during the past two years to elucidate the dynamical status of the pomeron and other high-ranking Regge trajectories through the study via multi-Regge-pole models of multiparticle production processes.[1-7] Interesting results have been achieved, but the shaky underpinning of multi-Regge dynamics has left room for skepticism about their significance. We here revive the 1962 ABFST multiperipheral model[8] based on (non-Regge) pion exchange in an effort to illuminate certain controversial aspects of the 1968 CP multi-Regge-pole model.[1,4-6] The qualitative conclusions from the latter survive, and there emerges a more specific and, perhaps, a more believable picture of the underlying mechanism.

It is an established experimental fact that if the final particles from a multiple-production reaction are ordered according to longitudinal momenta the mean subenergy of a neighboring pion pair is less than or of the order of 1 GeV.[9] This experimental importance of small subenergies in the multiperipheral chain has three immediate consequences that undermine confidence in the CP model while at the same time supporting the ABFST model:

1. Kinematic approximations depending on large values of subenergies are unjustified.

2. A multi-Regge-pole model based on leading trajectories requires an extreme and perhaps unreasonable significance for duality: an adequate Regge description of the lowest energy resonances.

3. A lower-lying trajectory containing a low-mass particle may be more important than high-lying trajectories containing no low-

mass particle; that is, a representation in the original "peripheral" sense based on nearby poles in momentum transfer may be more relevant than a representation based on high-ranking poles in angular momentum.

We are thus led to reconsider the model based on pion pole dominance that was introduced in 1962 by ABFST.[8] The small pion mass motivates the assumption that the dominant multiperipheral chain is the one shown in Fig. 1, which maximizes the number of pion-exchange links in a collision of the type

$$A + B \to A + B + 2(N+1) \text{ pions.} \tag{I.1}$$

Every second link is to be approximated by a pion pole, allowing the following factorization of the amplitude:

$$\mathcal{F}_{AB\to AB+n\pi} \approx f_{\pi A}(s_A, \theta_A) \frac{1}{t_1 - m_\pi^2} f_{\pi\pi}(s_1, \theta_1) \frac{1}{t_2 - m_\pi^2} \cdots$$

$$\cdots \frac{1}{t_{N+1} - m_\pi^2} f_{\pi B}(s_B, \theta_B) , \tag{I.2}$$

where $f_{\pi\pi}(s,\theta)$ is the elastic $\pi\pi$ amplitude at c.m. angle θ and energy $(s)^{1/2}$ and $f_{\pi A,B}$ is the corresponding amplitude for pions colliding with particles of type A,B. Since the s_i are not large on the average, we shall not use a Regge representation for these two particle $\to$ two particle amplitudes but instead will employ a realistic guess based on a combination of experimental and theoretical sources. We shall not assume that the low-energy resonance components of these two-particle amplitudes are adequately described on the average by a Regge representation, as was conjectured by Chew and Pignotti.[1]

The model amplitude (I.2) is constructed so as to have the pion poles at the correct positions with the correct residues, but the implied prescription for moving away from the poles is arbitrary. We shall identify θ_i as the angle, in the c.m. system of the out-going ith pion pair, between the direction of the outgoing pions and the direction of the spatial components of the adjacent momentum transfers. This prescription leads to a simple relation between the kernel of the multiperipheral integral equation and the elastic $\pi\pi$ cross section. Other equally plausible prescriptions lead to less manageable relations.

In the ABFST model[8] the pion plays the role of a zero-spin elementary particle, a fact which implies a counterpart Bethe-Salpeter equation. "Reggeizing" the pion links would break the Bethe-Salpeter correspondence and still leave a tractable problem,[10-12] but the logic behind such an "improvement" is not presently clear. If a motivation emerges, pion-Reggeization can and will be studied in the future.

Both in the ABFST pion-exchange model and in the multi-Regge-pole model, the result of summing all partial cross sections leads to a total cross section with Regge asymptotic behavior. Any model based on the iteration of a multiperipheral kernel yields output Regge poles, but the (input) multi-Regge-pole model explicitly characterizes the kernel through Regge trajectories and residues and thereby closes an immediate bootstrap cycle. The bootstrap implications of the ABFST model are not fundamentally different but are indirect--requiring an additional link that proceeds outside the model and involves crossing. It would be convenient if duality were to permit the multi-Regge shortcut, but as shown in Appendix C the resulting errors are quantitatively inadmissible.

A further simplification important to the CP model was the neglect of phase-space correlation between adjacent momentum transfers in the multiperipheral chain. It was thereby possible to factor the kernel, to average over separate momentum transfers, and thus to define effective coupling constants. These constants are related so indirectly to Regge residues, even assuming duality, that so far they have been determined only by fitting multiple production data. However, since kernel factorization is equivalent to the trace approximation for the Fredholm determinant, and in the ABFST model the trace approximation turns out to be tolerable, we have the possibility of calculating the effective CP coupling constants from the ABFST kernel, that is, from the $\pi\pi$ elastic cross section. In particular we shall be able to understand a vital feature of the CP model, the small value of the internal Pomeranchon coupling, in terms of the small high energy "tail" of the elastic $\pi\pi$ cross section.

A well-known and powerful technique for studying the ABFST model is to write an integral equation for the imaginary part of the forward amplitude and to diagonalize the equation by a suitable transformation. The transformation is from the energy s to the Toller variable λ -- a "higher angular momentum" in the t channel. This approach directly yields the asymptotic s properties of the cross section but is less well adapted to studying finite-energy properties of the model, particularly if the kernel has a small but nonzero component at high subenergy. Such a component generates "fine structure" in the output Regge-pole spectrum, so that the physics of finite energies involves the positions and residues of <u>several</u> output poles. We shall consider the diagonalization approach

in the final sections of this paper, but in the earlier sections we shall study the ABFST model by more elementary methods.

II. INDIVIDUAL CROSS SECTIONS FOR MULTIPLE PION PRODUCATION

As the most elementary and straightforward approach to the ABFST model we present in this section the model prediction for individual production cross sections. The notation will be useful for all subsequent considerations. Referring to Fig. 1, let us define a set of "vertex boost"[10,13] parameters q_A, q_1, $q_2 \cdots q_N$, q_B by

$$\cosh q_i = \frac{s_i - t_i - t_{i+1}}{2(-t_i)^{1/2}\,(-t_{i+1})^{1/2}}, \tag{II.1}$$

$$\sinh q_A = \frac{s_A - m_A^2 - t_1}{2m_A(-t_1)^{1/2}}, \tag{II.1a}$$

$$\sinh q_B = \frac{s_B - m_B^2 - t_{N+1}}{2m_B(-t_{N+1})^{1/2}}, \tag{II.1b}$$

together with the "overall boost" parameter η :

$$\cosh \eta = \frac{s - m_A^2 - m_B^2}{2m_A m_B}. \tag{II.2}$$

Let us also define quantities $C_A(s)$, $C(s)$, and $C_B(s)$ such that[14]

$$C(s) = \frac{1}{16\pi^3}\lambda(s, m_\pi^2, m_\pi^2)\,\sigma_{e\ell}^{\pi\pi}(s), \tag{II.3}$$

$$C_A(s) = \frac{1}{16\pi^3}\lambda(s, m_A^2, m_\pi^2)\,\sigma_{e\ell}^{\pi A}(s), \tag{II.3a}$$

$$C_B(s) = \frac{1}{16\pi^3} \lambda(s, m_B^2, m_\pi^2)\, \sigma_{e\ell}^{\pi B}(s) , \qquad \text{(II.3b)}$$

with

$$\lambda(x, y, z) = \left[x^2 + y^2 + z^2 - 2(xy + xz + yz) \right]^{1/2} . \qquad \text{(II.4)}$$

In terms of these quantities we show in Appendix A that the amplitude (I.2) leads to the following formula for the cross section σ_N^{AB} to produce N "internal" pairs of pions (see Fig. 2):

$$\sigma_N^{AB}(s) = \frac{16\pi^3}{\lambda^2(s, m_A^2, m_B^2)} \int ds_A\, ds_1\, ds_2 \cdots ds_N\, ds_B\, dt_1\, dt_2 \cdots dt_{N+1}$$

$$\times \frac{(\eta - q_A - q_1 - q_2 \cdots - q_N - q_B)^N}{N!}\, \theta(\eta - q_A - q_1 \cdots - q_B)$$

$$\times \frac{C_A(s_A) C(s_1) \cdots C(s_N) C_B(s_B)}{\left(t_1 - m_\pi^2\right)^2 \left(t_2 - m_\pi^2\right)^2 \cdots \left(t_{N+1} - m_\pi^2\right)^2} . \qquad \text{(II.5)}$$

Note that the index N has been defined so that $N = -1$ has the significance

$$\sigma_{-1}^{A\pi}(s) = \sigma_{e\ell}^{\pi A}(s) . \qquad \text{(II.6)}$$

The special case of Formula (II.5) with $N = 0$ was first written down by Berestetsky and Pomeranchuk.[15]

The derivation of Formula (II.5) is given in Appendix A for the case of neutral pions. When charge is included it is convenient to diagonalize in the crossed-channel isotopic spin, which may take the

values $I = 0, 1, 2$ in the ABFST model because two pions are "exchanged" between particles A and B in the sense of Fig. 2. One then replaces Formula (II.3) by

$$C^I(s) = \frac{1}{16\pi^3} \lambda(s, m_\pi^2, m_\pi^2) \sum_{I'} \beta_{II'} \sigma^{\pi\pi}_{e\ell, I'}(s) , \qquad \text{(II.3')}$$

where $\beta_{II'}$ is the isotopic spin crossing matrix,

$$\beta_{II'} = \begin{pmatrix} 1/3 & 1 & 5/3 \\ 1/3 & 1/2 & -5/6 \\ 1/3 & -1/2 & 1/6 \end{pmatrix} . \qquad \text{(II.7)}$$

There will be a corresponding replacement of C_A and C_B that depends on the isotopic spin of particles A and B.

The formulas of this section give the physical content of the ABFST model in terms of "input" elastic cross sections. At any finite energy only a finite number of the "output" inelastic cross sections σ_N^{AB} are nonzero, so with a sufficiently powerful computer the theoretical task would now be finished, nothing but elementary quadrature remaining. Already at lab energies $\lesssim 20$ GeV, however, the number of important N values is sufficiently large that important collective effects appear in the total cross section, effects which are unlikely to be illuminated by a simple-minded term-by-term evaluation. It is thus worthwhile to study the summation over N by the integral equation technique of ABFST.

III. RECURSION RELATION AND THE ABFST INTEGRAL EQUATION

Following ABFST and using the notation of the preceding section, we define a Lorentz-invariant function of two four-vector variables,

$$f_N(p_1, p_{N+1}) = F_N^+\left((p_1-p_{N+1})^2,\ p_1^2,\ p_{N+1}^2\right)$$

$$\equiv \int ds_1 \cdots ds_N\ C(s_1)\cdots C(s_N)\left(\frac{2}{\pi}\right)^{N-1} \int d^4p_2 \cdots d^4p_N$$

$$\frac{\delta^+\left((p_2-p_1)^2 - s_1\right)\cdots\delta^+\left((p_{N+1}-p_N)^2 - s_N\right)}{\left(p_2^2 - m_\pi^2\right)^2 \cdots \left(p_N^2 - m_\pi^2\right)^2}, \tag{III.1}$$

corresponding to Fig. 3, where all lines refer to pions. Although not explicitly so represented in its arguments, F_N^+ is nonzero only for positive time-like components of $(p_{N+1} - p_1)$. The normalization is such that, by comparison with Formula (II.5) (see Appendix A),

$$F_N^+(s,\ m_\pi^2,\ m_\pi^2) = \frac{\lambda(s,\ m_\pi^2,\ m_\pi^2)}{16\pi^3}\ \sigma_{N-2}^{\pi\pi}(s)\ , \tag{III.2}$$

or more generally

$$\sigma_N^{AB}(s) = \frac{16\pi^3}{\lambda(s,\ m_A^2,\ m_B^2)} \int ds_A\ ds_B\ C_A(s_A)\ C_B(s_B)\ \left(\frac{2}{\pi}\right)^2 \int d^4p_1\ d^4p_{N+1}$$

$$\times \frac{\delta^+\left((p_1-p_A)^2 - s_A\right)\ \delta^+\left((p_B-p_{N+1})^2 - s_B\right)}{\left(p_1^2 - m_\pi^2\right)^2\ \left(p_{N+1}^2 - m_\pi^2\right)^2}\ f_N(p_1, p_{N+1}). \tag{III.3}$$

Observe that although the definition (III.1) implies for the special case $N = 1$ that the function

$$F_1^+(s, t, t') = C(s) \tag{III.4}$$

is independent of t and t', in general the functions F_N^+ depend on all three scalars.

The functions $f_N(p, p')$ satisfy the recursion relation

$$f_N(p, p') = \int_{4m_\pi^2}^{\infty} ds_N \, C(s_N) \frac{2}{\pi} \int d^4p_N \frac{\delta^+\left((p'-p_N)^2 - s_N\right)}{(p_N^2 - m_\pi^2)^2} f_{N-1}(p, p_N). \tag{III.5}$$

The upper limit of the s_N integration is only formally infinite since s_N must be less than $(p - p')^2$ by some finite amount. [This constraint is imposed in the p_N integration, where it is impossible to simultaneously satisfy the δ function and have $(p - p_N)^2$ above the threshold for the function f_{N-1} if $s_N > (p - p')^2$.]

The definition

$$f(p, p') = \sum_{N=1}^{\infty} f_N(p, p') \tag{III.6}$$

then leads to the ABFST integral equation:

$$f(p, p') = f_1(p, p') + \frac{2}{\pi} \int d^4p'' \, f(p, p'') \, K(p'', p'), \tag{III.7}$$

with the kernel,

$$K(p'', p') \equiv \int ds' \, C(s') \, \frac{\delta^+\left((p'-p'')^2 - s'\right)}{(p''^2 - m_\pi^2)^2} \, . \qquad \text{(III.8)}$$

$$= \frac{f_1(p'', p')}{(p''^2 - m_\pi^2)^2} \, .$$

Formula (III.2), together with (II.6), implies

$$F^+(s, m_\pi^2, m_\pi^2) = \frac{\lambda(s, m_\pi^2, m_\pi^2)}{16\pi^3} \, \sigma_{tot}^{\pi\pi}(s) \, , \qquad \text{(III.9)}$$

whereas replacement of f_N by f in Formula (III.3) yields a total inelastic cross section for a general (A, B) collision.

If the integral equation (III.7) is solved by iteration and substituted into (III.3) one simply reproduces the sequence of partial cross sections given by (II.5). We propose to study the solution by two other methods. The first method depends on splitting the basic kernel-determining function $C(s)$ into two parts--one large and one small--and treating the small part as a perturbation. To motivate such a splitting of the kernel we now examine the structure of $C(s)$ as revealed by experimental $\pi\pi$ elastic scattering data.

Figure 4 shows our estimate, based partly on experimental knowledge and partly on the Veneziano model, of the three $\pi\pi$ elastic cross sections and the three C^I's. We have included the following resonances: standard ρ and f (both with a 140MeV width), a broad ϵ (Γ_ϵ = 450 MeV) at the ρ mass, and highly inelastic g and ρ''. The assumed properties of these resonances are presented in Table I.

TABLE I. Estimated properties of the low-energy π-π resonances.

Resonance	Mass (GeV)	Full width (GeV)	Elasticity $= \Gamma_{\pi\pi}/\Gamma_{tot}$	$\sum_I \beta_{0I}\sigma^I_{tot}(max)$ (mb)	d_i^{R*}
ρ	0.765	0.14	1.0	231	0.25
ϵ	0.765	0.45	1.0	26	0.09
f	1.26	0.14	1.0	46	0.05
g	1.65	0.14	0.35	38	0.04
f'	1.65	0.14	0.28	7	0.01
					$d^R = 0.44$

* Evaluated from Eq. (IV.20) for $T = 1\ \mathrm{GeV}^2$.

We also included a nonresonant $I = 2$ cross section of 8-12 mb and forced the cross sections down to approximately match the Weinberg scattering lengths at threshold.[16] From Fig. 4 one sees that for $s > 3\ \mathrm{GeV}^2$ the resonance fluctuations are expected to be negligible, so that a representation in terms of Regge poles above this energy is valid. One observes, furthermore, that the cross sections for $s > 3\ \mathrm{GeV}^2$ are expected to be small relative to their values in the region of low energy resonances. From factorization (and also the intuitive notion that, since the high-energy ratio $\sigma_{e\ell}/\sigma_{tot}$ is $\frac{1}{6}$ to $\frac{1}{5}$ for both pp and πP, this ratio must have a similar value for $\pi\pi$) we obtain $\sigma^{\pi\pi}_{tot} = 16$ mb and $\sigma^{\pi\pi}_{e\ell}(\mathrm{asym}) = 2.5 - 3.0$ mb. Of course $\sigma^{\pi\pi}_{e\ell}(s)$ is not constant, due to the logarithmic shrinkage of the diffraction peak, so we mean these values to hold for $s \approx 20\text{-}50\ \mathrm{GeV}^2$.

IV. THE WEAK POMERANCHUK COMPONENT OF THE ABFST KERNEL AND DIFFRACTIVE DISSOCIATION

The ABFST model, like a multi-Regge model, necessarily implies multiple Pomeranchuk (P) exchange. When the model is expressed as an integral equation and then diagonalized, as in Sec. V below, this P component produces the kernel's rightmost singularity in the J plane and complicates the leading singularity structure of the output amplitude. The asymptotic behavior of the amplitude at extreme high energies is correspondingly affected. P-generated singularities have nevertheless been shown in the CP model to be so "weak" that at moderate energies the P component of the kernel has relatively minor physical consequence.[1,5] But because the CP model employs dubious approximations to achieve its

high degree of tractability, the generality of the "weak Pomeranchuk" notion has not been widely appreciated. In this section we use the ABFST model to study the same question in a different and perhaps more persuasive context.

Rather than working in the J plane, we shall study in a direct fashion the effect on the moderate-energy total cross section of including or excluding from the ABFST kernel the high-energy tail of the elastic $\pi\pi$ cross section. Our starting point will be the undiagonalized integral equation (III.7), together with perturbation theory. We show for energies where s is large but $\ln s$ is not, that single-P exchange is predicted to be small and multiple-P exchange negligible. Exchange of at least one P in an inelastic reaction is often characterized as "diffractive dissociation" (henceforth to be abbreviated "d.d."). Hence the objective of this section is to show that moderate-energy d.d. cross sections are relatively small.

The specification of "moderately high" energy is crucial to an understanding of the subtle behavior of d.d. We shall find that the proportion of the total cross section involving at least one P exchange increases with increasing energy. Eventually this fraction must approach unity, but not until energies at which $\ln s$ is a large number. In other words, the rate of increase of the d.d. cross section is so small that, even at energies at which Regge behavior of the total cross section is well established (e.g. $s \approx 20$, $\ln s \approx 3$), the d.d. component remains a minor fraction.

It follows then that any model which attempts to describe the total cross section purely in terms of P exchange, single or multiple, is inadequate. On the other hand, a crude model may omit P exchange if one wishes to describe only moderately high energies.

After this lengthy preamble we now proceed to estimate the first-order effect of the pomeron on the total cross section at energies where s, but not $\ln s$, is large. We shall separate the elastic $\pi\pi$ cross section into two components--a large low-energy "resonance component" and a small high-energy "tail"--and then calculate the effect of omitting or including this "tail." We thus begin by writing

$$f_1(s) = f_1^R(s)\,\theta(s^* - s) + f_1^P(s)\,\theta(s - s^*)\,, \qquad \text{(IV.1)}$$

where s^* will usually be taken as about 3 GeV^2. (See Fig. 4.) Next we express the integral equation (III.7) symbolically as

$$\begin{aligned} f &= f_1 + fgf_1 \\ &= f_1^R + f_1^P + fg(f_1^R + f_1^P)\,, \end{aligned} \qquad \text{(IV.2)}$$

where g represents the pion propagator. Let f^R designate the "zeroth-order" solution,

$$f^R = f_1^R + f^R g\, f_1^R\,. \qquad \text{(IV.3)}$$

Then to first order in the "small" quantity f_1^P,

$$f \approx f^R + f_1^P + f_1^P g f^R + f^R g f_1^P + f^R g f_1^P g f^R , \tag{IV.4}$$

or, also to first order in f_1^P;

$$\Delta f = f - f^R \approx f_1^P + f_1^P g f + f g f_1^P + f g f_1^P g f . \tag{IV.5}$$

Separating off the first term, which corresponds to elastic scattering, we have for our perturbation estimate of diffractive dissociation

$$\sigma_{d.d.}^{\pi\pi} \approx \frac{16\pi^3}{\lambda} \left\{ \int f_1^P g f + \int f g f_1^P + \iint f g f_1^P g f \right\} . \tag{IV.6}$$

The first two terms in the bracket represent dissociation of <u>either</u> one <u>or</u> the other of the two incident particles, while the third represents dissociation of <u>both</u>. We shall refer to these alternatives as "single dissociation" and "double dissociation," respectively.

We have at the outset agreed to treat the function $f_1(p, p')$ as depending only on the single scalar $(p' - p)^2$. Doing the same for $f(p, p')$ in Eq. (IV.6), we may replace f through Formula (III.9) by the total $\pi\pi$ cross section. Now, suppose we assume that the ABFST model has the capacity to generate the physically observed pion-production cross sections and the corresponding total cross section. Then, to evaluate

$\sigma^{\pi\pi}_{d.d.}$ via Eq. (IV.6) we don't require the resonance kernel f_1^R. We can substitute in the observed total cross section. Assuming such capacity for the model we propose to use the experimental total cross section in Eq. (IV.6). The two types of integrals therein are then formally identical to those appearing in Eq. (II.5) for $N = 0, 1$, except that certain elastic cross sections now become total cross sections.

If at this point we restrict attention to zero I-spin in the crossed channel and correspondingly define

$$C^{tot}(s) = \frac{\lambda(s, m_\pi^2, m_\pi^2)}{16\pi^3} \sum_{I'} \beta_{0I'} \sigma^{\pi\pi}_{tot,I'}(s) , \qquad \text{(IV.7)}$$

we obtain by appropriate substitutions in Eq. (II.5) the following explicit realization of Eq. (IV.6):

$$\sigma^{\pi\pi}_{d.d.}(s) \approx 2 \frac{16\pi^3}{\lambda^2(s, m_\pi^2, m_\pi^2)} \int ds_1\, C^{tot}(s_1) \int ds_2\, C(s_2)$$

$$\times \int \frac{dt}{(t - m_\pi^2)^2}\, \theta(\eta - q_1 - q_2)$$

$$+ \frac{16\pi^3}{\lambda^2(s, m_\pi^2, m_\pi^2)} \int ds_1\, C^{tot}(s_1) \int ds_2\, C(s_2) \int ds_3\, C^{tot}(s_3)$$

$$\times \int \frac{dt_1}{(t_1 - m_\pi^2)^2} \int \frac{dt_2}{(t_2 - m_\pi^2)^2} (\eta - q_1 - q_2 - q_3)\, \theta(\eta - q_1 - q_2 - q_3) . \qquad \text{(IV.8)}$$

Examination of the integrands appearing in (IV.8) reveals that the simple pion propagators do not sufficiently cut off the large-t contributions. As written, one finds the important range of $|t_i|$ to increase indefinitely with increasing s, in violation of the underlying physical assumption of peripheralism. A related fact discussed below in Sec. V is that the diagonalized ABFST equation is not Fredholm unless a t cutoff is imposed. [The cutoff parameter employed in Sec. V is not precisely equivalent to that used here because in this section we have neglected the dependence of $f(p, p')$ on p^2 and p'^2.] This deficiency presumably arises from our having treated the exchanged pions as elementary. In any event, when evaluating (IV.8) we shall employ a simple square cutoff in the t integrals, recognizing that our original motivating assumption of pion-pole dominance requires that such a cutoff be not much larger than 1 GeV^2.

To facilitate evaluation of Formula (IV.8), we break the total cross section, and correspondingly $C^{tot}(s)$, into high-and low-energy components:

$$\sigma_{tot}^{\pi\pi}(s) = \sigma_{tot}^{R}(s)\,\theta(s^* - s) + \sigma_{tot}^{P}(s)\,\theta(s - s^*) . \qquad \text{(IV.9)}$$

The formula for $\sigma_{d.d.}^{\pi\pi}$ then becomes the sum of five terms, which schematically we write

$$\begin{aligned}\sigma_{d.d.}^{\pi\pi} \approx\ & 2\int \sigma_{tot}{}^{R}\, g\, \sigma_{e\ell}{}^{P} + 2\int \sigma_{tot}{}^{P}\, g\, \sigma_{e\ell}{}^{P} \\ & + \int \sigma_{tot}{}^{R}\, g\, \sigma_{e\ell}{}^{P}\, g\, \sigma_{tot}{}^{R} + 2\int \sigma_{tot}{}^{R}\, g\, \sigma_{e\ell}{}^{P}\, g\, \sigma_{tot}{}^{P} \\ & + \int \sigma_{tot}{}^{P}\, g\, \sigma_{e\ell}{}^{P}\, g\, \sigma_{tot}{}^{P} . \qquad \text{(IV.10)}\end{aligned}$$

The first term of (IV.10) may be described as a "generalized Deck effect,"[17] as depicted in Fig. 5a. When represented as the reaction $\pi_A + \pi_B \to \pi_A^* + \pi_B$, the mass range here of π_A^* is small [so small when R is the ρ resonance as to allow a $3\pi(A_1)$ resonance interpretation]. It is well known that the model under study here gives an acceptable description of diffractively-produced resonances.[18]

The second term of (IV.10) corresponds to Fig. 5b and is less easy to identify with a clean physical measurement because the mass of π_A^* is now unbounded. In "missing mass" terminology this second term evidently corresponds to the region of large missing mass, above the prominent individual resonances. Each interval in missing mass yields a contribution to the d.d. cross section that is constant in overall energy, but since the missing-mass range increases with energy, the total contribution to d.d. from this second term increases with s and must finally surpass the resonance contribution.

So far only the first term of (IV.10) has received systematic experimental study. The final three terms correspond to doubly diffractive dissociation, with or without large masses for π_A^* and π_B^*. Figure 5c, for example, corresponds to the third term of (IV.10), where the masses of both π_A^* and π_B^* are constrained.

In evaluating the integrals we use the following approximations:

$$\sigma_{e\ell}^{P}(s) \approx \text{constant} , \tag{IV.11}$$

$$\sigma_{tot}^{P}(s) \approx \text{constant}, \tag{IV.12}$$

$$\sigma_{tot}^{R}(s) \approx \sum_i \sigma_i(\max)\, \pi\, \Gamma_i\, m_i\, \delta(s - m_i^2) , \tag{IV.13}$$

where m_i, Γ_i and $\sigma_i(\max)$ are the masses, widths, and peak total cross sections of the important $\pi\pi$ resonances (see Table I). Since we are concerned only with moderate energies we neglect the effect of diffraction peak shrinkage on the elastic cross section.

There is no difficulty in numerically evaluating Formula (IV.8), but understanding of the physics is enhanced by further analysis. Let us suppose that $s \gg s^* \gg T \gg m_\pi^2$, T being the cutoff on the t integration. Kinematic simplifications explained in Appendix C then lead to the following asymptotic approximations to the five components of Formula (IV.10):

$$2 \int \sigma_{tot}^R \, g \, \sigma_{e\ell}^P \approx d^R \, \sigma_{e\ell}^P , \tag{IV.14}$$

$$2 \int \sigma_{tot}^P \, g \, \sigma_{e\ell}^P \approx d^P \, \ell n(s/\bar{s}) \sigma_{e\ell}^P , \tag{IV.15}$$

$$\int \sigma_{tot}^R \, g \, \sigma_{e\ell}^P \, g \, \sigma_{tot}^R \approx \frac{1}{2} (d^R)^2 \, \sigma_{e\ell}^P , \tag{IV.16}$$

$$2 \int \sigma_{tot}^R \, g \, \sigma_{e\ell}^P \, g \, \sigma_{tot}^P \approx \frac{1}{2} d^P \, d^R \, \ell n(s/\bar{s}) \, \sigma_{e\ell}^P , \tag{IV.17}$$

$$\int \sigma_{tot}^P \, g \, \sigma_{e\ell}^P \, g \, \sigma_{tot}^P \approx \frac{1}{8} (d^P)^2 \, \ell n^2(s/\bar{s}) \, \sigma_{e\ell}^P , \tag{IV.18}$$

where

$$d^P \equiv \frac{T}{16\pi^3} \, \sigma_{tot}^P , \tag{IV.19}$$

$$d^R = \sum_i d_i^R = \sum_i \frac{T}{16\pi^3} \, \frac{\pi \, \Gamma_i \, m_i \, \sigma_i(\max)}{T + m_i^2} . \tag{IV.20}$$

The scale parameter $\bar{s}$ is of the order of magnitude $(s^*)^2/T$.

All cross sections, including $\sigma_{d.d.}$, refer to the linear combination appearing in (IV.7), which at high energies is three times the actual $\pi\pi$ cross section. To avoid confusion about normalization it is helpful to think in terms of the ratio of $\sigma_{d.d.}$ to $\sigma_{e\ell}$, which is controlled by the dimensionless quantities d^P and d^R. With $T = 1\ \mathrm{GeV}^2$ and $\sigma_{tot}^{\pi\pi} = 16$ mb, we find from (IV.19) the result

$$d^P \approx 0.25 , \tag{IV.21}$$

while from the $\pi\pi$ resonance parameters listed in Sec. III, Formula (IV.20) gives (see Table I)

$$d^R \approx 0.44. \tag{IV.22}$$

With such moderate-sized coefficients one sees from (IV.16), (IV.17), and (IV.18) that double d.d. is small compared with single d.d. so long as $\ell n\ s$ is not large.

It is easy to see that multiple-P exchange is totally negligible. Since in first order single d.d. is larger than double d.d., we may conclude that in second order the largest term is

$$2 \int \sigma_{e\ell}^{\ P}\, \sigma_{e\ell}^{\ P}\, \sigma_{tot}^{P} ,$$

which by comparison with (IV.18) is

$$\frac{1}{4} \left(d^P\right)^2 \left(\frac{\sigma_{e\ell}^{\ P}}{\sigma_{tot}^{P}} \right) \ell n^2 (s/\bar{s})\, \sigma_{e\ell}^{\ P} , \tag{IV.23}$$

when the leading power of $\ell n\ s$ is evaluated. Thus a good estimate of the total moderate-energy d.d. in the ABFST model is given by the first two terms of (IV.10), or more generally by the first term of (IV.8) --which is simply the Berestetsky-Pomeranchuk singly peripheral formula[15]

with an elastic cross section at one vertex and a total cross section at the other.

The Berestetsky-Pomeranchuk formula is sufficiently simple that it can be numerically integrated without approximations. In Fig. 6 we show the result of such an integration, still using the simple forms (IV.11-13) but with an exact treatment of phase space and the physical value of m_π.

The result of our estimate is that the moderate-energy d.d. cross section is smaller than the elastic cross section, and thus very small compared with the total. The d.d. production of a fixed interval of "missing mass" has the same dependence on total energy as the elastic cross section, but the missing-mass spectrum elongates with incident energy so that the integrated d.d. cross section increases logarithmically. When the integrated d.d. cross section becomes comparable to the total, the perturbation approach of this section becomes invalid, but from (IV.15) and (V.21) we estimate that such will not occur until

$$d^P \, \ell n(s/\bar{s}) \, \sigma_{e\ell}{}^P \approx \sigma^P_{tot} , \qquad \text{(IV.24)}$$

or, with

$$\frac{\sigma_{e\ell}{}^P}{\sigma^P_{tot}} \approx \frac{1}{6} ,$$

$$\ell n \, (s/\bar{s}) \approx 24. \qquad \text{(IV.25)}$$

Thus for all except the highest cosmic ray energies it is appropriate to think of the pomeron component of the ABFST kernel as a small perturbation.

V. THE DIAGONALIZED EQUATION AND THE DETERMINATION OF REGGE POLE POSITIONS

We may use BCP variables[10,13] to reformulate the ABFST integral equation, which in Eq. (III.7) we have expressed through conventional momentum variables. Diagonalization of the equation is then possible, using the techniques of Refs. 10-12. The result is the same as achieved by the Bethe-Salpeter route,[7] and, now exposing the I-spin index, may be written

$$F_I^{\lambda}(t,t') = F_{I,1}^{\lambda}(t,t') + \int_{-\infty}^{0} dt''\, F_I^{\lambda}(t,t'')K_I^{\lambda}(t'',t') , \tag{V.1}$$

where the "partial wave" F^{λ} is defined by

$$F_I^{\lambda}(t,t') \equiv \int_1^{\infty} d\cosh\eta \; \frac{e^{-(\lambda+1)\eta(s,t,t')}}{\lambda+1} \; F_I^{+}(s,t,t') , \tag{V.2}$$

with

$$\cosh\eta(s,t,t') = \frac{s-t-t'}{2(tt')^{1/2}} , \tag{V.3}$$

a similar projection formula defining the inhomogeneous term $F_{I,1}^{\lambda}$. The projected kernel of the integral equation turns out to be given by

$$K_I^{\lambda}(t'',t') = \frac{1}{\left(t''-m_\pi^2\right)^2} \int_{4m_\pi^2}^{\infty} ds\, C_I(s) \; \frac{e^{-(\lambda+1)\eta(s,t'',t')}}{\lambda+1} . \tag{V.4}$$

The appropriate formula to invert the transformation (V.2), given in Ref. 19, is

$$F_I^{+}(s,t,t') = \int d\lambda(\lambda + 1) \frac{e^{+(\lambda+1)\eta}}{\sinh \eta} F_I^{\lambda}(t,t'), \qquad (V.5)$$

the integration over $d\lambda$ running over a contour from $-i\infty$ to $+i\infty$, passing to the right of all λ singularities of F^{λ}. The rightmost λ singularities then control the large s asymptotic behavior of $F_I(s,t,t')$.

Roughly speaking the λ singularities of F_I^{λ} arise from two different sources. Branch points already present in the kernel K_I^{λ} and in the inhomogeneous term $F_{I,1}^{\lambda}$ propagate into the solution of the integral equation, whereas poles in λ arise from zeros of the Fredholm determinant--corresponding to solutions of the homogeneous equation. Pole positions thus depend only on the kernel and not at all on the inhomogeneous term. We shall confine our attention here to the question of pole positions, leaving the more difficult question of residues for future investigation.

Formula (V.4) shows that, if the elastic $\pi\pi$ cross sections are power bounded, the kernel $K_I^{\lambda}(t,t')$ is an analytic function of λ for Re λ sufficiently large. As discussed in Sec. VI, Eq. (VI.1), we assume the asymptotic behavior

$$C_I(s) \underset{s\to\infty}{\sim} C^I \frac{(s/s_0)^{\beta_I}}{\ln(s/s_0)}, \qquad (V.6)$$

with

$$\beta_0 = 2\alpha_P(0) - 1 \approx 1,$$

$$\beta_1 = \alpha_P(0) + \alpha_\rho(0) - 1 \approx \frac{1}{2},$$

$$\beta_2 = 2\alpha_\rho(0) - 1 \approx 0, \qquad (V.7)$$

$\alpha_P(0)$ and $\alpha_\rho(0)$ being the zero-t intercepts of the Pomeranchuk and rho trajectories, respectively. When (V.6) is combined with (V.4) it follows that the rightmost λ singularity in K_I^λ is an infinite logarithmic branch point at $\lambda = \beta_I$, with strength proportional to C^I:

$$K_I^\lambda(t,t') \xrightarrow[\lambda \to \beta_I]{} \frac{C^I}{\lambda + 1}\left(\frac{(tt')^{1/2}}{s_0}\right)^\lambda \frac{(tt')^{1/2}}{(t - m_\pi^2)^2} \ln \frac{1}{\lambda - \beta_I} . \tag{V.8}$$

Analytic continuation to the left of this branch point is possible but we shall be mainly concerned with the region to the right, at least for $I = 0$ and $I = 1$.

The t-dependence of (V.8) shows that even for $\mathrm{Re}\,\lambda > \beta_I$ the kernel (V.4) is non-Fredholm, the simple inverse power behavior in t and t' not being adequate to produce convergence in (V.1). A cutoff of the large t region is required, just as in Sec. IV, and we shall achieve this by replacing the $-\infty$ lower limit in (V.1) with $-\Delta$ where we expect to choose $\Delta \lesssim 1\ \mathrm{GeV}^2$. We shall find, fortunately, that certain important qualitative conclusions can be reached independently of the value of Δ.

Once an assumption has been made about $C_I(s)$, it is a straightforward matter by numerical computation to determine the Regge poles as values of λ for which the kernel has a unit eigenvalue. Insight into the dynamics is enhanced, however, by considering the trace approximation to the Fredholm determinant, whose vanishing corresponds to the unit eigenvalue:

$$D^I(\lambda) \approx 1 - \mathrm{Tr}\, K_I^{\lambda}$$

$$= 1 - \frac{1}{\lambda + 1} \int_{-\Delta}^{0} \frac{dt}{\left(t - m_\pi^2\right)^2} \int_{4m_\pi^2}^{\infty} ds\, e^{-(\lambda+1)\eta(s,t)}\, C_I(s), \tag{V.9}$$

with $\cosh \eta(s,t) = 1 - \frac{s}{2t}$. In this approximation, which we have verified to be reasonably accurate by numerical comparison with the exact solution, the location of Regge poles is reduced to a simple quadrature.

VI. THE TRACE APPROXIMATION; COMPARISON WITH THE CP MODEL

Since resonance fluctuations are expected to be small for $s > s^* \approx 3\ \mathrm{GeV}^2$, we break the integral, Eq. (V.9), into low- and high-energy parts, employing a Regge representation for the latter. Here the type of J-plane singularity appears to be important, so we shall not neglect the effects of diffraction-peak shrinkage. That is, we take

$$C_I(s) \underset{s>s^*}{=} \sum_i \frac{c_i^{\,I}}{b_i^{\,I} + \ln(s/s_0)} \left(\frac{s}{s_0}\right)^{\beta_i} . \tag{VI.1}$$

This form corresponds to an assumed Regge-pole behavior for the elastic $\pi\pi$ amplitude, with residues varying exponentially with τ, leading to a differential cross section

$$\sum_{I'} \beta_{II'} \frac{d\sigma_{I'}^{e\ell}}{d\tau} \propto \frac{1}{s^2} \sum_{m,n} \gamma_I^{m,n} e^{a_{mn}^I \tau} \left(\frac{s}{s_0}\right)^{\alpha_m(\tau)+\alpha_n(\tau)} , \tag{VI.2}$$

or, with linear trajectories, to an integrated elastic cross section,

$$\sum_{I'} \beta_{II'} \sigma_{I'}^{e\ell} \propto \frac{1}{s^2} \sum_{m,n} \gamma_I^{m,n} \frac{\left(s/s_0\right)^{\alpha_m(0)+\alpha_n(0)}}{a_{mn}^I + (\alpha'_m + \alpha'_n)\ln(s/s_0)} . \tag{VI.3}$$

The form (VI.3) evidently leads to (VI.1) through the identifications

$$\beta_i = \alpha_m(0) + \alpha_n(0) - 1 \tag{VI.4}$$

and

$$b_i^I = \frac{a_{mn}^I}{\alpha'_m + \alpha'_n} . \tag{VI.5}$$

Since the I-spin in question refers to the crossed reaction, the leading trajectory combinations for $I = 0$ are PP, PP', $\rho\rho$, and $P'P'$. For $I = 1$ the leading combinations are $P\rho$, $P'\rho$, and $\rho\rho$, and for $I = 2$ we have $\rho\rho$.

For $D^I(\lambda)$, in the trace approximation, we now write

$$D^I(\lambda) \approx 1 - T_{res}{}^I(\lambda) - T^I_{asym}(\lambda) , \qquad \text{(VI.6)}$$

where

$$T_{res}{}^I(\lambda) = \frac{1}{\lambda + 1} \int_{-\Delta}^{0} \frac{dt}{(t - m_\pi{}^2)^2} \int_{4m_\pi{}^2}^{s^*} ds \; e^{-(\lambda+1)\eta(s,t)} \; C^I(s) ,$$

$$T^I_{asym}(\lambda) = \frac{1}{\lambda + 1} \sum_i C_i{}^I \int_{-\Delta}^{0} \frac{dt}{(t - m_\pi{}^2)^2} \int_{s^*}^{\infty} ds$$

$$\times \frac{e^{-\lambda+1)\eta(s,t)}}{b_i{}^I + \ell n\left(\frac{s}{s_0}\right)} \left(\frac{s}{s_0}\right)^{\beta_i} . \qquad \text{(VI.8)}$$

To evaluate $T^I_{asym}(\lambda)$ we note that since s is much larger than t, $e^\eta \approx \left(\frac{s}{-t}\right)$. This gives

$$T^I_{asym}(\lambda) \approx \frac{1}{\lambda + 1} \int_{-\Delta}^{0} dt \; \frac{(-t)^{\lambda+1}}{(t - m_\pi{}^2)^2} \sum_i C_i{}^I \int_{s^*}^{\infty} ds$$

$$\times \frac{s^{-(\lambda+1)} \left(\frac{s}{s_0}\right)^{\beta_i}}{b_i{}^I + \ell n\left(\frac{s}{s_0}\right)} . \qquad \text{(VI.9)}$$

If λ is not too close to zero we may neglect the m_π^2 in the t integration. Then performing the t-integration and changing variables in the s integral, we have

$$T^I_{asym}(\lambda) = \frac{(\Delta/s_0)^\lambda}{\lambda(\lambda+1)} \sum_i C_i^I \, e^{b_i^I(\lambda-\beta_i)} \int_{(\lambda-\beta_i)(b_i^I+\ln\frac{s^*}{s_0})}^{\infty} dx \, \frac{e^{-x}}{x}$$

(VI.10)

$$= \frac{(\Delta/s_0)^\lambda}{\lambda(\lambda+1)} \sum_i C_i^I \, e^{b_i^I(\lambda-\beta_i)} \, E_1\left[(\lambda-\beta_i)(b_i^I+\ln\frac{s^*}{s_0})\right].$$

In the integral form one can see the expected logarithmic singularity.

Turning to the resonance component (VI.7), it is difficult to avoid a numerical s integration, but because the range of s is restricted we no longer need a cutoff in t. Inverting the order of integration and again setting $m_\pi^2 = 0$, we have

$$T_{res}^I(\lambda) \approx \frac{1}{\lambda+1} \int_{4m_\pi^2}^{s^*} ds \, C^I(s) \int_{-\infty}^{0} \frac{dt}{t^2} \, e^{-(\lambda+1)\eta(s,t)}$$

(VI.7')

$$= \frac{2}{\lambda(\lambda+1)(\lambda+2)} \int_{4m_\pi^2}^{s^*} \frac{ds}{s} \, C^I(s) \, .$$

It appears that the leading λ singularity here is at $\lambda = 0$, a surprising result, since the more correct expression (VI.7) has only the pole at $\lambda = -1$ that arose from pion exchange $(2\alpha_\pi - 1 = -1)$.

The pole in (VI.7') at $\lambda = 0$ arises from the approximation of setting $m_\pi^2 = 0$, a simplification unjustified for $\lambda \lesssim 0$. As before, however, we shall be chiefly interested in the region where $\lambda \gtrsim \frac{1}{2}$.

Combining the preceding results, we have

$$D^I(\lambda) \approx 1 - \frac{1}{\lambda(\lambda+1)} \left\{ \frac{2}{\lambda+2} R_I + \left(\frac{\Delta}{s_0}\right)^\lambda \sum_i C_i^I \, e^{b_i^I(\lambda-\beta_i)} \times E_1\left[(\lambda-\beta_i)(b_i^I + \ln \frac{s^*}{s_0})\right] \right\} . \tag{VI.11}$$

where

$$R_I = \int_{4m_\pi^2}^{s^*} \frac{ds}{s} C^I(s) . \tag{VI.12}$$

Formula (VI.11) above may be compared with the denominator appearing in Eq. (4.2) of Ref. 5 to relate the ABFST model to that of CP. To show more clearly the relation between the models we keep only the leading cut and then make a pole approximation for this cut. That is, we assume b_i^I to be large and use the asymptotic expansion of the exponential integral,

$$E_1(z) \sim \frac{e^{-z}}{z} \left\{ 1 - \frac{1}{z} + 0 \frac{1}{z^2} \right\} \sim \frac{e^{-z}}{z+1} , \tag{VI.13}$$

to get

$$D^I(\lambda) = 1 - \frac{1}{\lambda(\lambda+1)} \left\{ \frac{2}{\lambda+2} R_I + \left(\frac{\Delta}{s_0}\right)^\lambda \left[\frac{C^I}{b^I + \ln \frac{s^*}{s_0}}\right] \frac{\exp\left\{-(\lambda-\beta_I)\ln \frac{s^*}{s_0}\right\}}{\left(\lambda - \beta_I + \frac{1}{b^I + \ln \frac{s^*}{s_0}}\right)} \right\} \tag{VI.14}$$

for

$$\lambda - \beta_I \gg \frac{1}{b^I + \ell n \frac{s^*}{s_0}} .$$

Thus the cut with a branch point at β_I and discontinuity proportional to $e^{b(\lambda-\beta)}$ is replaced by a pole at

$$\bar{\beta}_I = \beta_I - \frac{1}{b^I + \ell n \frac{s^*}{s_0}} , \qquad \text{(VI.15)}$$

the approximate "center of gravity" of the discontinuity.

Restricting discussion to $I = 0$, where we are approximating the PP cut by a pole, we have, from (II.3'),

$$C_0(s) \underset{s>s^*}{\simeq} \frac{s}{16\pi^3}\left(\frac{1}{3}\sigma^{e\ell}_{I_s=0}(s) + \sigma^{e\ell}_{I_s=1}(s) + \frac{5}{3}\sigma^{e\ell}_{I_s=2}(s)\right)$$

$$\approx \frac{3s}{16\pi^3}\sigma^{e\ell}(s) , \qquad \text{(VI.16)}$$

so the single-term approximation,

$$C_0(s) \approx \frac{c^0}{b^0 + \ell n(s/s_0)}\left(\frac{s}{s_0}\right)^{\beta_0} , \qquad \text{(VI.17)}$$

corresponds, with $\beta_0 \approx 1$, to

$$\frac{3s_0}{16\pi^3}\sigma^{e\ell}(s) \approx \frac{c^0}{b^0 + \ell n(s/s_0)} . \qquad \text{(VI.18)}$$

Thus the coefficient within the square bracket in (VI.14) may be evaluated as

$$\frac{C^0}{b^0 + \ell n \frac{s^*}{s_0}} \approx \frac{3s_0}{16\pi^3} \sigma^{e\ell}(s^*) , \tag{VI.19}$$

allowing (VI.14) for $I = 0$ to be written as

$$D^0(\lambda) \approx 1 - \frac{1}{\lambda(\lambda + 1)} \left\{ \frac{2}{\lambda + 2} R_0 + \left(\frac{\Delta}{s_0}\right)^{\lambda} \left(\frac{3 s_0 \sigma^{e\ell}(s^*)}{16\pi^3}\right) \frac{e^{-(\lambda-\beta_0)\ell n \frac{s^*}{s_0}}}{\lambda - \bar{\beta}_0} \right\} . \tag{VI.20}$$

For comparison with the CP model we now consider the denominator of Eq. (4.2) of Ref. 5 (identifying J with λ),

$$D(\lambda) = 1 - g_M^{\ 2} \rho^M(\lambda) - g_P^{\ 4} \rho^P(\lambda) \rho^M(\lambda) , \tag{VI.21}$$

where the "propagator" functions $\rho^i(\lambda)$ are normalized to $(\lambda - \beta_i)^{-1}$ for $\lambda - \beta_i$ large. The corresponding functions of λ in (VI.20) fall off more rapidly than the inverse first power, but the resonance component of (VI.20) decreases smoothly after the "pole" at $\lambda = 0$ and the high energy component decreases smoothly after the "pole" at $\lambda = \bar{\beta}_0$. We are chiefly interested in the region near $\lambda = 1$, so let us replace all but these leading-pole factors in (VI.20) by the values taken at $\lambda = 1$. Then (VI.20) becomes

$$D^0(\lambda) \underset{\lambda \text{ near } 1}{\approx} 1 - \frac{1}{\lambda} \left\{ \frac{R_0}{3} + \frac{1}{2} \left(\frac{\Delta}{s_0}\right) \left(\frac{3 s_0 \sigma^{e\ell}(s^*)}{16\pi^3}\right) \frac{1}{\lambda - \bar{\beta}_0} \right\} . \tag{VI.22}$$

Comparing (VI.21) with (VI.22), we may now read off the following rough equivalences:

$$\beta_M \approx 0 , \tag{VI.23}$$

$$\beta_P \approx \bar{\beta}_0 , \tag{VI.24}$$

$$g_M^{\ 2} \approx \frac{R_0}{3} , \tag{VI.25}$$

$$g_P^{\ 4} \approx \frac{1}{2} \left(\frac{\Delta}{s_0} \right) \frac{3\ s_0\ \sigma^{e\ell}(s^*)}{16\pi^3} . \tag{VI.26}$$

It is interesting to remark that $\beta_M \approx 0$ means, according to Formula VI.4, that in the CP model an input pion trajectory behaves like $\alpha_\pi(0) \approx \frac{1}{2}$ rather than $\alpha_\pi(0) = 0$. An equivalent statement is that an inelastic two-body—to—two-body cross section with pion exchange varies as s^{-1}, not s^{-2}, for s not too large. Such a cross section is given by

$$\sigma^{AB\to CD}(s) \propto s^{-2} \int_{-\infty}^{t_{min}} dt \ \frac{1}{(t - m_\pi^{\ 2})^2} \propto \frac{s^{-2}}{m_\pi^{\ 2} - t_{min}} .$$

Since

$$t_{min} \approx - \frac{(m_C^{\ 2} - m_A^{\ 2})(m_D^{\ 2} - m_B^{\ 2})}{s} ,$$

it follows that when s is small enough that $|t_{min}| \gg m_\pi^{\ 2}$,

$$\sigma^{AB\to CD}(s) \propto s^{-1} .$$

The result (IV.26) provides an estimate of the internal pomeron coupling in terms of the elastic $\pi\pi$ cross section. Previously we estimated $\sigma_{e\ell}^{\pi\pi} = 2.5 - 3.0$ mb for $s = 20 - 50\ \text{GeV}^2$. Since $s^* = 3\ \text{GeV}^2$

it may be that $\sigma_{e\ell}^{\pi\pi}(s^*)$ (actually just the pomeron contribution to it) is slightly larger, perhaps 3.5 mb. This estimate gives for g_P^4

$$g_P^4 \approx 0.03 \frac{\Delta}{\mathrm{GeV}^2} . \tag{VI.27}$$

Therefore our assumption, $\Delta \lesssim 1\ \mathrm{GeV}^2$, implies a small value for g_P^4, small enough to justify making a crude model by dropping the pomeron component of the kernel. It should be obvious to the reader that we are here repeating the estimate of Section IV, but now in a "J-plane language."

The estimate (VI.27) is in satisfactory accord with the requirements of Ref. 20, where the small high-energy tail of the kernel is used in a CP-type model to split the leading output pole into P plus P'. Such a splitting capability requires $g_P^4 \approx 0.03$.

In papers employing the CP model[1,4,5] it has been shown that the large experimentally observed multiplicity implies that the effective output pole should be produced primarily by the low-energy component of the kernel. Neglecting g_P^4, or dropping the contribution to the trace from $s > s^*$ in the more accurate Eq. (VI.11), leads to

$$D^I(\lambda) \approx 1 - \frac{2R_I}{\lambda(\lambda+1)(\lambda+2)} . \tag{VI.28}$$

To produce the P and ρ poles we evidently need to have

$$D^0(\lambda \approx 1) = 0 \qquad \text{and} \qquad D^1(\lambda \approx \tfrac{1}{2}) = 0. \tag{VI.29}$$

By numerically integrating $C^I(s)/s$ (see Fig. 4) one obtains from Eq. (VI.12) $R_0 = 0.79$, $R_1 = 0.31$, and $R_2 = 0.01$ for $s^* = 3\ \mathrm{GeV}^2$.

The first two values are too small by a factor of 3 to 4 to satisfy (VI.29). Correspondingly, evaluation of g_M^2 from Eq. (VI.25) leads to $g_M^2 \approx \frac{1}{4}$, whereas in CP,[1] g_M^2 needs to be ≈ 1.

In Ref. 20 we show for $I = 0$ that it is unnecessary for the low-energy component of the kernel to produce a pole as high as $\lambda = 1$. If the kernel with only the low-energy contribution can, via Eq. (VI.28), produce a pole at $\lambda = 0.07$ then addition of the high energy kernel tail can boost the leading singularity to $\lambda \approx 1$ and still maintain an acceptable multiplicity. Assuming such to be the requirement, $R_0 \approx 0.8$ seen to be roughly half of what is needed.

Although the R_I's calculated from Eq. (VI.12) are too small, they have the proper ratio to explain the observed ordering of the leading $I = 0$, 1, and 2 trajectories. In Appendix C we point out that such is not the case for a purely multi-Regge model based on duality.

VII. SUMMARY AND DISCUSSION

We began this paper by arguing that the ABFST model has a firmer physical basis than multi-Regge models, and we have explored various aspects of the ABFST model to illuminate in particular the CP multi-Regge model. We have confirmed the notion of a weak pomeron component in the multiperipheral kernel, relating this idea to the small diffractive dissociation cross section and obtaining an estimate for the CP pomeron coupling constant in terms of the high-energy elastic $\pi\pi$ cross section. The lower-trajectory aspects of the multi-Regge kernel have been found to have weaker physical foundation, duality giving a poor representation of the important resonance components of the ABFST kernel. Nevertheless, if one foregoes direct identification of input and output poles it is

possible to find "input poles" for the CP model which roughly simulate the important resonance input of the ABFST model. The factorizability of the CP kernel, although motivated originally by an illegitimate assumption of large subenergies, appears not to be grossly misleading.

In the course of the investigation, unanticipated light was shed on several matters: (a) We discovered a generalization of the Berestetsky-Pomerenchuk formula which provides a practical basis for exact numerical evaluation of the ABFST model at any energy. (b) We found a way of looking at diffractive dissociation which explains certain paradoxical features of this concept. (c) We found that the exceptionally small pion mass causes the pion-exchange effect in a CP-type multi-Regge model to act like a trajectory with $J \approx 1/2$ rather than $J = 0$.

A disappointing discovery was the deficient strength, by a factor 2 to 3, of the resonance component of the ABFST kernel, based on a reasonable estimate of the $\pi\pi$ cross section. We can offer several possible explanations for this deficiency, the most immediate being the inherent limitation of the model. The basis of the model is the presence in the multiparticle production amplitude of pion poles, with residues that are related to the elastic $\pi\pi$ amplitude. This fact suggests, but does not determine, the multiparticle amplitude in its physical region.[21]

A second possible factor contributing to the inadequate kernel strength is our estimate of the $\pi\pi$ elastic cross section. For example, Wolf,[22] in fitting reactions with pion exchange, used $\pi\pi$ cross sections which were 6 to 8 times as large as ours at threshold. Another possible source of error is interference terms (crossed graphs).[23] Since the

mean $\pi\pi$ subenergies are comparable to the momentum transfers, the usual motivation for neglecting crossed diagrams is diminished.

In spite of the inadequate kernel strength the qualitative characteristics of the ABFST model seem impressively relevant to nature. With a "fudge factor" to augment the resonance component, we expect that this original version of the multiperipheral model will prove extremely useful.

ACKNOWLEDGMENTS

Extensive discussions with James S. Ball, G. Marchesini, and Don Tow have been of major assistance in the work reported here.

APPENDIX A: GENERALIZATION OF THE BERESTETSKY-POMERANCHUK FORMULA

The general cross section formula for producing n particles is (see Fig. 7a)

$$\sigma_{2\to n}(s) = \frac{(2\pi)^4}{2\lambda(s,\ m_A^2,\ m_B^2)} \prod_{i=1}^{n} \int \frac{d^4k_i\ \delta^+(k_i^2 - m_i^2)}{(2\pi)^3}\ \delta^4\left(p_A + p_B - \sum_{i=1}^{n} k_i\right) \times |A_{2\to n}|^2 . \tag{A.1}$$

For the ABFST model we group the final particles into N + 2 pairs and use a different labeling system, as shown in Fig. 7b. With the factored reaction amplitude (I.2), the corresponding cross-section formula is

$$\sigma_N^{AB}(s) = \frac{(2\pi)^4}{2\lambda(s,\ m_A^2,\ m_B^2)} \int \frac{d^4k_A\ \delta^+(k_A^2-m_A^2)}{(2\pi)^3} \int \frac{d^4k'_A\ \delta^+(k'^2_A-m_\pi^2)}{(2\pi)^3}\ |f_A(s_A,\theta_A)|^2$$

$$\times \prod_{i=1}^{N} \int \frac{d^4k_i\ \delta^+(k_i^2-m_\pi^2)}{(2\pi)^3} \int \frac{d^4k'_i\ \delta^+(k'^2_i-m_\pi^2)}{(2\pi)^3}\ |f(s_i,\theta_i)|^2$$

$$\times \int \frac{d^4k'_B\ \delta^+(k'^2_B-m_\pi^2)}{(2\pi)^3} \int \frac{d^4k_B\ \delta^+(k_B^2-m_\pi^2)}{(2\pi)^3}\ |f_B(s_B,\theta_B)|^2$$

$$\times\ \delta^4\left(p_A + p_B - K_A - K_B - \sum_{i=1}^{N} K_i\right) \prod_{i=1}^{N+1} \frac{1}{(t_i - m_\pi^2)^2}\ , \tag{A.2}$$

where

$$s_j = K_j^2, \qquad \text{with} \qquad K_j = k_j + k'_j ,$$

$$t_j = p_j^2, \qquad \text{with} \quad p_j \quad \text{defined as in Fig. 7b, and}$$

θ_j is the angle between k_j and p_j in the K_j rest frame. Note the important fact that the momentum transfers p_j can be expressed entirely in terms of the K_j.

Consider in Formula (A.2) the factors associated with a particular pair of outgoing particles, adding a formal integration over d^4K_j, together with a compensating delta function:

$$\int d^4K_j \int \frac{d^4k_j \; \delta^+(k_j^2 - m_\pi^2)}{(2\pi)^3} \int \frac{d^4k'_j \; \delta^+(k'^2_j - m_\pi^2)}{(2\pi)^3} \left| f(s_j, \theta_j) \right|^2 \delta^4(k'_j + k_j - K_j). \tag{A.3}$$

For a fixed K_j the integration here over $d^4k_j \; d^4k'_j$ is evidently identical to that which occurs in the corresponding elastic cross section. Expression (A.3) consequently can be written

$$\int d^4K_j \; \frac{2\lambda(s_j, m_\pi^2, m_\pi^2)}{(2\pi)^4} \; \sigma_{e\ell}^{\pi\pi}(s_j) ,$$

which with the definition (II.3) becomes

$$\frac{2}{\pi} \int d^4K_j \; C(s_j) = \frac{2}{\pi} \int ds_j \; C(s_j) \int d^4K_j \; \delta^+(K_j^2 - s_j) , \tag{A.3'}$$

a corresponding rule also holding for the A and B pairs at the ends of the chain. Formula (A.2) may thus be contracted to

$$\sigma_N^{AB}(s) = \frac{(2\pi)^4}{2\lambda(s, m_A^2, m_B^2)} \left(\frac{2}{\pi}\right)^{N+2} \int ds_A\, C_A(s_A) \int ds_1\, C(s_1) \cdots \int ds_B C_B(s_B)$$

$$\times \int d^4K_A\, \delta^+(K_A^2 - s_A) \int d^4K_1\, \delta^+(K_1^2 - s_1) \cdots \int d^4K_B\, \delta^+(K_B^2 - s_B)$$

$$\times\, \delta^4\left(p_A + p_B - K_A - K_B - \sum_{i=1}^{N} K_i\right) \prod_{i=1}^{N+1} \frac{1}{(t_i - m_\pi^2)^2} \,. \tag{A.2'}$$

The region of integration for the K_j in (A.2') is just the usual phase space for $N + 2$ "particles" with "masses" $(s_j)^{1/2}$. The region of integration for the s_j is more subtle. The lower limit for each s_j is simply the appropriate elastic threshold, but the upper limit is collectively determined by the requirement that

$$(s_A)^{1/2} + (s_B)^{1/2} + \sum_{i=1}^{N} (s_i)^{1/2} \leqslant (s)^{1/2} \,. \tag{A.4}$$

With a change of variables from the K_j to the p_j, thereby eliminating the energy-momentum conservation delta function, Eq. (A.2') constitutes the basis for Sec. III.

To derive Eq. (II.5) from (A.2'), we note that for a fixed set of s_j the integration over the K_j's amounts to just the $N + 2$ particle phase space. We treat this problem as a succession of two-particle phase-space calculations, starting at the B end of the chain. Thus we first consider K_B as one "particle," the other "particle" consisting of all remaining pairs, with combined momentum (see Fig. 8)

$$\tilde{K}_{N+1} = K_A + K_1 + \cdots K_N \,.$$

This two-particle phase space may be calculated as

$$\int d^4K_B\ \delta^+(K_B^{\ 2} - s_B) d^4\tilde{K}_{N+1}\ \delta^+(\tilde{K}_{N+1}^2 - v_{N+1})\ \delta^4(p_A + p_B - K_B - \tilde{K}_{N+1})$$

$$= \frac{\pi}{2}\ \frac{1}{\lambda(s,\ m_A^{\ 2},\ m_B^{\ 2})} \int dt_{N+1}\ , \qquad (A.5)$$

the angular integrations having been performed in the absence of any factors in the model that depend on angles. In (A.5) we have introduced a factor $\delta^+(\tilde{K}_{N+1}^2 - v_{N+1})$ which does not appear in (A.2') and so to compensate must integrate over dv_{n+1}. We also have introduced $d^4\tilde{K}_{N+1}$, which we compensate with a factor $\delta^4(\tilde{K}_{N+1} - K_a - K_1 \cdots - K_N)$ that carries over to the next step, where we consider K_N as one "particle" and $\tilde{K}_N = K_a + K_1 + \cdots K_{N-1}$ as the other "particle." The next two-particle phase-space calculation then leads to

$$\frac{\pi}{2}\ \frac{1}{\lambda(v_{N+1},\ m_A^{\ 2},\ t_{N+1}} \int dt_N\ , \qquad (A.6)$$

together with an integration over dv_n. Repeating the process down to the A end of the chain, we have

$$\int d^4K_A\ \delta^+(K_A^{\ 2} - s_A) \int d^4K_1\ \delta^+(K_1^{\ 2} - s_1) \cdots \int d^4K_B\ \delta^+(K_B^{\ 2} - s_B)\delta^4(p_A + p_B - K_A - K_1 - \cdots K_B)$$

$$= \frac{\pi}{2\lambda(s, m_A^{\ 2}, m_B^{\ 2})} \int dv_{N+1}\ dt_{N+1}\ \frac{\pi}{2\lambda(v_{N+1}, m_A^{\ 2}, t_{N+1})} \int dv_N\ dt_N$$

$$\times \cdots \frac{\pi}{2\lambda(v_3, m_A^{\ 2}, t_3)} \int dv_2\ dt_2\ \frac{\pi}{2\lambda(v_2, m_A^{\ 2}, t_2)} \int dt_1\ . \qquad (A.7)$$

The final step is to integrate over the v's. Here the use of Toller variables is appropriate. In addition to the boosts defined by Eqs. (II.1) and (II.2), we define the parameter ζ_i,

$$\sinh \zeta_i = \frac{v_i - m_A^2 - t_i}{2m_A(-t_i)^{1/2}}, \qquad \cosh \zeta_i = \frac{\lambda(v_i, m_A^2, t_i)}{2m_A(-t_i)^{1/2}}, \tag{A.8}$$

which boosts from the rest frame of particle A where p_i is "z-t like" to the frame where p_i is "z like" and p_A is "z-t like." (By our numbering convention $\zeta_1 = q_A$.) We also require the parameter ξ_i, which boosts from the latter frame to the frame where p_i is still "z like" but p_{i+1} is "z-t like." The relation among these Toller variables is

$$\sinh \zeta_{i+1} = \sinh \zeta_i \cosh q_i \cosh \xi_i + \cosh \zeta_i \sinh q_i, \tag{A.9}$$

$$\cosh \eta = \sinh \zeta_{N+1} \sinh q_B \cosh \xi_{N+1} + \cosh \zeta_{N+1} \cosh q_B. \tag{A.10}$$

Since each ξ_i has a zero lower limit, ζ_{i+1} has a lower limit equal to $\zeta_i + q_i$, while in addition ξ_{N+1} has an upper limit equal to $\eta - q_B$.

Observe now from (A.8) that for fixed t_i

$$\frac{dv_i}{\lambda(v_i, m_A^2, t_i)} = \frac{d \sinh \xi_i}{\cosh \xi_i} = d\xi_i . \tag{A.11}$$

It then follows that

$$\int \frac{dv_{N+1}}{\lambda(v_{N+1}, m_A^2, t_{N+1}} \cdots \int \frac{dv_2}{\lambda(v_2, m_A^2, t_2)}$$

$$= \int_{q_A+q_1+\cdots q_N}^{\eta-q_B} d\xi_{N+1} \cdots \int_{q_A+q_1+q_2}^{\xi_4-q_3} d\xi_3 \int_{q_A+q_1}^{\xi_3-q_2} d\xi_2$$

$$= \frac{1}{N!} (\eta - q_A - q_1 - \cdots - q_N - q_B)^N \, \Theta(\eta - q_A - q_1 \cdots - q_N - q_B). \tag{A.12}$$

Insertion of (A.12) into (A.7) and thence into (A.2') leads to the form (II.5) presented in the text.

APPENDIX B: ASYMPTOTIC PHASE-SPACE SIMPLIFICATION FOR THE DIFFRACTIVE DISSOCIATION FORMULA (IV.8)

The large-s limit of the integrals appearing in Formula (IV.8) can be evaluated in closed form if one realizes that, because of the small pion mass the exterior vertex boosts are always large, while the interior vertex (when it occurs) involves only $s_i > s^*$ and also, therefore, only large boosts. We may consequently replace $2 \sinh q_i$ or $2 \cosh q_i$ by e^{q_i}, as well as $2 \cosh \eta$ by e^{η}. We may furthermore simplify (II.2) to

$$\cosh q_2 \approx \frac{s_2}{2(t_1 t_2)^{1/2}}$$

at an interior vertex, while (II.1a) leads to

$$\sinh q_1 \approx \frac{s_1 - t_1}{2m_\pi(-t_1)^{1/2}} ,$$

with a corresponding simplification at the other exterior vertex. There is of course never any question about the approximation

$$2 \cosh \eta \approx s/m_\pi^2 .$$

Thus in the first term of (IV.8) we employ the simplification

$$\eta - q_1 - q_2 \approx \ln \frac{s(-t)}{(s_1 - t)s_2} ,$$

where even the t in the denominator will be dropped for $s_1 > s^*$, while in the second term of (IV.8) we use

$$\eta - q_1 - q_2 - q_3 \approx \ln \frac{s\, t_1\, t_2}{(s_1 - t_1)\, s_2 (s_3 - t_2)} ,$$

again dropping a denominator t whenever the companion s_i is large.

Making the one additional and unquestionably legitimate approximation of setting the pion mass equal to zero in the propagators, it is then possible to evaluate the integrals in closed form.

APPENDIX C: "DUALITY" AND THE KERNEL OF THE ABFST INTEGRAL EQUATION

When the first multi-Regge model was proposed it was suggested that through "duality" the Regge form might represent the resonance region in some average sense. At that time, however, it was not appreciated how low the average subenergy actually is. Given that the average subenergy is $s \lesssim 1\ \mathrm{GeV}^2$,[9] the applicability of duality to the multiperipheral model becomes more doubtful. We shall show here that one realization of the duality concept, based on the Veneziano model, leads to a qualitatively wrong isospin dependence of the ABFST kernel.

The Veneziano model for $\pi\pi$ scattering[24,25] contains both ρ and P' trajectories. Because of the absence of $I = 2$ resonances these trajectories are exchange degenerate, a fact which fixes the ratio of their residues and consequently fixes the ratio of the three ABFST kernels. The Veneziano model gives for the s channel $\pi\pi$ amplitudes

$$A_{I_s=0} = \frac{1}{2}\left[3B(s,t) + 3B(s,u) - B(t,u)\right] ,$$

$$A_{I_s=1} = B(s,t) - B(s,u) ,$$

and

$$A_{I_s=2} = B(t,u) ,$$

where

$$B(s,t) = \frac{\beta\Gamma\left[1 - \alpha(s)\right]\Gamma\left[1 - \alpha(t)\right]}{\Gamma\left[1 - \alpha(s) - \alpha(t)\right]} .$$

Except for the unfortunate ρ' this model contains the same resonances with roughly the same properties as we use in Table I for the low energy $\pi\pi$ cross sections.

To test the usefulness of duality in the multiperipheral model we take the asymptotic form of the Veneziano model and then use it, even in the low-energy region, to determine the kernel. The large-s asymptotic form is

$$A_{I_s=0} \sim \beta\, \Gamma\left[1 - \alpha(t)\right]\left(\frac{s}{s_0}\right)^{\alpha(t)}\left[\frac{3}{2}\, e^{-i\pi\alpha(t)} - \frac{1}{2}\right],$$

$$A_{I_s=1} \sim \beta\, \Gamma\left[1 - \alpha(t)\right]\left(\frac{s}{s_0}\right)^{\alpha(t)} e^{-i\pi\alpha(t)},$$

and

$$A_{I_s=2} \sim \beta\, \Gamma\left[1 - \alpha(t)\right]\left(\frac{s}{s_0}\right)^{\alpha(t)} .$$

Notice that the Regge form of $A_{I_s=2}$ is real, a result which, by duality, is necessary if the $I_s = 2$ channel is to have no resonances. On the other hand, when we square the amplitudes to get the I-spin cross sections we will obviously get equal $I_s = 1$ and $I_s = 2$ cross sections! Comparing with our estimated cross sections, Fig. 4a, we see that we must expect difficulties.

Neglecting this forewarning and continuing on, we find, for the differential cross sections needed in (VI.2),

$$\frac{d\sigma^{e\ell}_{I_s=0}}{d\tau} = \frac{\pi\beta^2}{2}\, \Gamma^2\left[1 - \alpha(\tau)\right]\left(\frac{s}{s_0}\right)^{2\alpha(\tau)-2}\left[3 \sin^2\left(\frac{\pi\alpha(\tau)}{2}\right) + 1\right]$$

$$\frac{d\sigma^{e\ell}_{I_s=1}}{d\tau} = \frac{d\sigma^{e\ell}_{I_s=2}}{d\tau} = \frac{\pi\beta^2}{2}\, \Gamma^2\left[1 - \alpha(\tau)\right]\left(\frac{s}{s_0}\right)^{2\alpha(\tau)-2} .$$

To obtain the C^I's, Eq. (II.4a'), we cross to the t channel before doing the τ integration and find

$$\begin{bmatrix} C^0 \\ C^1 \\ C^2 \end{bmatrix} = \frac{\pi\beta^2}{2} \frac{\lambda\left(s, m_\pi^2, m_\pi^2\right)}{16\pi^3} \int d\tau \; \Gamma^2 \left[1 - \alpha(\tau)\right] \left(\frac{s}{s_0}\right)^{2\alpha(\tau)-2} \times \begin{bmatrix} 3 + \sin^2\left[\frac{\pi\alpha(\tau)}{2}\right] \\ \sin^2\left[\frac{\pi\alpha(\tau)}{2}\right] \\ \sin^2\left[\frac{\pi\alpha(\tau)}{2}\right] \end{bmatrix} .$$

Since $\alpha(0) \approx \frac{1}{2}$, the values of the integrands at $\tau = 0$ (at the forward peak) are in the ratio 7:1:1 for $I = 0$, 1, and 2 respectively. Taking the different "widths" of the "forward peaks" into account, we see that C^0, C^1, and C^2 are in the ratio r:1:1 with $r > 7$. This implies that the low-energy contributions to the kernel--the parts with no singularity for $\lambda > 0$,--also stand in the ratio r:1:1. These ratios can be compared with those calculated directly from the low-energy resonances, where we found the R_I to stand in the ratio 0.79:0.31:0.01.

We see that the naive use of "duality" leads to the disastrous prediction that output $I = 1$ and $I = 2$ poles occur at the same value of λ. It also will probably lead to an excessively large separation between the output $I = 0$ and $I = 1$ poles.

FOOTNOTES AND REFERENCES

* This work was supported in part by the U. S. Atomic Energy Commission.

+ Present address: Cavendish Laboratory, Cambridge, England.

1. G. F. Chew and A. Pignotti, Phys. Rev. 176, 2112 (1968).

2. G. F. Chew, F. E. Low, and M. L. Goldberger, Phys. Rev. Letters 22, 208 (1969).

3. I. G. Halliday and L. M. Saunders, Nuovo Cimento 60, 494 (1969).

4. L. Caneschi and A. Pignotti, Phys. Rev. 180, 1525 (1969), and Coupled Channels Model of Self-Consistent Regge Trajectories, University of California-Santa Barbara preprint (1969).

5. G. F. Chew and W. R. Frazer, Phys. Rev. 181, 1914 (1969).

6. W. R. Frazer and C. H. Mehta, Phys. Rev. Letters 23, 258 (1969).

7. J. Ball and G. Marchesini, A. Bethe-Salpeter Approach to the Multi-Regge Bootstrap, University of Utah preprint (1969); Dynamical Regge Trajectories from the Multiperipheral Model, Lawrence Radiation Laboratory preprint UCRL-19282 (1969).

8. L. Bertocchi, S. Fubini, and M. Tonin, Nuovo Cim. 25, 626 (1962); D. Amati, A. Stanghellini, and S. Fubini, Nuovo Cim. 26, 6 (1962).

9. Z. Ajduk, L. Michejda, W. Wójcik, Further Results from the CLA Model Applied to $\pi p \to p5\pi$ Reaction at 8 GeV/c, INR (Warsaw) preprint 1088/VI/PH.

10. G. F. Chew and C. DeTar, Phys. Rev. 180, 1577 (1969).

11. A. H. Mueller and I. J. Muzinich, Diagonalization of the Integral Equation at Vanishing Values of Momentum Transfer, Brookhaven National Laboratory preprint BNL-13728, May 1969.

12. M. Ciafaloni, C. DeTar, and M. Misheloff, Multiperipheral Dynamics at General Momenta Transfer, Lawrence Radiation Laboratory preprint UCRL-19286, Aug. 1969.

13. N. F. Bali, G. F. Chew, and A. Pignotti, Phys. Rev. 163, 1572 (1967); Phys. Rev. Letters 19, 614 (1967).

14. If the incident particles (A, B) are not pions, Formulas (II.3a,b) should be interpreted so that the cross sections $\sigma_{\pi A}^{e\ell}(s)$ include delta function contributions at $s = m_A^2$, corresponding to an end link in Fig. 1 leading to one particle rather than two.

15. V. B. Berestetsky and I. Ya. Pomeranchuk, Soviet Phys. JETP 12, 752 (1961) and Nucl. Phys. 22, 629 (1961).

16. S. Weinberg, Phys. Rev. Letters 17, 616 (1966).

17. R. J. Deck, Phys. Rev. Letters 13, 169 (1964).

18. O. Cyzyewski, in Proceedings of the 14th International Conference on High Energy Physics, Vienna, 1968, p. 367.

19. M. Ciafaloni and C. DeTar, The O(2,1) Decomposition of the Equal-Mass Multiperipheral Equation at $t = 0$, Lawrence Radiation Laboratory preprint UCRL-19417, November 1969.

20. G. F. Chew and D. R. Snider, Multiperipheral Mechanism for a Schizophrenic Pomeron, Lawrence Radiation Laboratory preprint UCRL-19455, Jan. 1970.

21. Various alternative "off-shell continuations" for the ABFST resonance kernel have been considered by D. Tow, Some Predictions of the ABFST Multiperipheral Model, Lawrence Radiation Laboratory preprint UCRL-19449, Jan. 1970. The strip model is a different version of a multiperipheral model, based on $\pi\pi$ amplitudes, which doesn't

exhibit an "off-shell ambiguity." According to recent calculations by P. D. B. Collins and R. Johnson, Phys. Rev. 185, 2020 (1969) and 177, 2472 (1969), the resonance input to the strip model has adequate strength.

22. Gunter Wolf, Phys. Rev. 182, 1538 (1969).

23. Any finite number of crossed diagrams could be generated by a more general kernel which still maintains the basic structure of the integral equation.

24. C. Lovelace, Phys. Letters 28B, 264 (1968).

25. J. Shapiro, Phys. Rev. 179, 1345 (1969).

FIGURE CAPTIONS

Fig. 1. Diagram representing the ABFST model amplitude for the process $A + B \to A + B + 2(N + 1)\pi$.

Fig. 2. Diagram representing the cross section obtained by squaring the ABFST amplitude of Fig. 1.

Fig. 3. Momenta and invariants used in the integral equation.

Fig. 4a. The assumed $\pi\pi$ elastic cross sections.

Fig. 4b. The functions $C^{I_t}(s)/s$, given by Eq. (II.3') with insertion of the cross sections shown in Fig. 4a.

Fig. 5a. The singly diffractive "generalized Deck effect," π_A^* being a low-mass system.

Fig. 5b. Single diffraction dissociation leading to a large-mass π_A^*.

Fig. 5c. The doubly diffractive reaction $\pi_A + \pi_B \to \pi_A^* + \pi_B^*$, where both π_A^* and π_B^* are low-mass systems containing only a few pions.

Fig. 6. The $\pi\pi$ diffractive dissociation cross section, normalized to the asymptotic $\pi\pi$ elastic cross section. Contributions from various parts of $\sigma_{tot}^{\pi\pi}$ are shown separately.

Fig. 7a. Diagram showing significance of momentum labels in Formula (A.1).

Fig. 7b. Diagram showing significance of momentum lables in Formula (A.2).

Fig. 8. Momentum diagram defining the "cluster momenta" $\tilde{K}_i$ used to express multiparticle phase space as a product of two-body phase spaces.

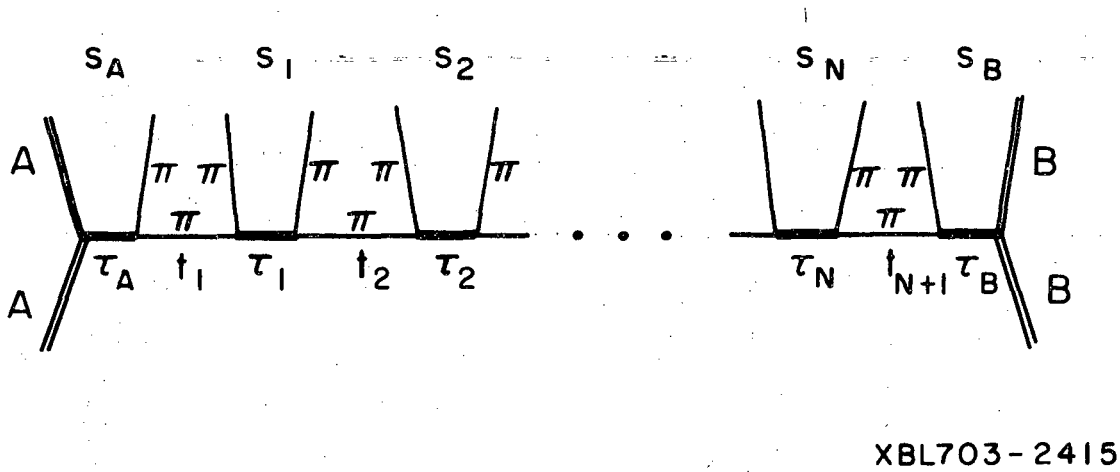
s_A
s_1
s_2
s_N
s_B
A
A
B
B
π
τ_A
t_1
τ_1
t_2
τ_2
τ_N
t_{N+1}
τ_B
XBL703-2415

Fig. 1

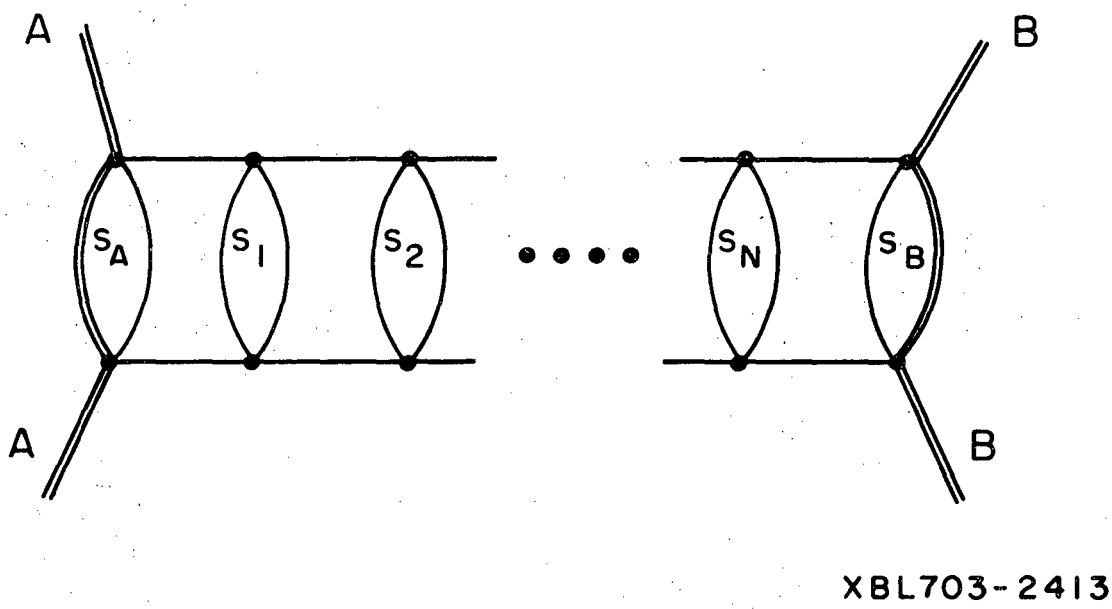

Fig. 2

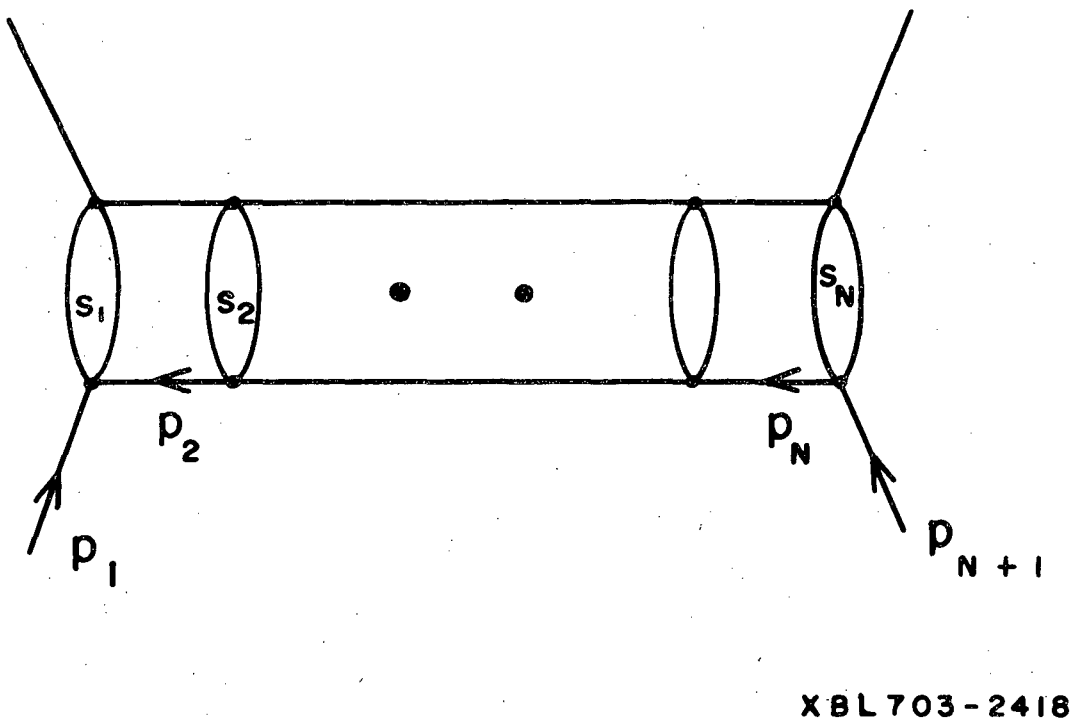

Fig. 3

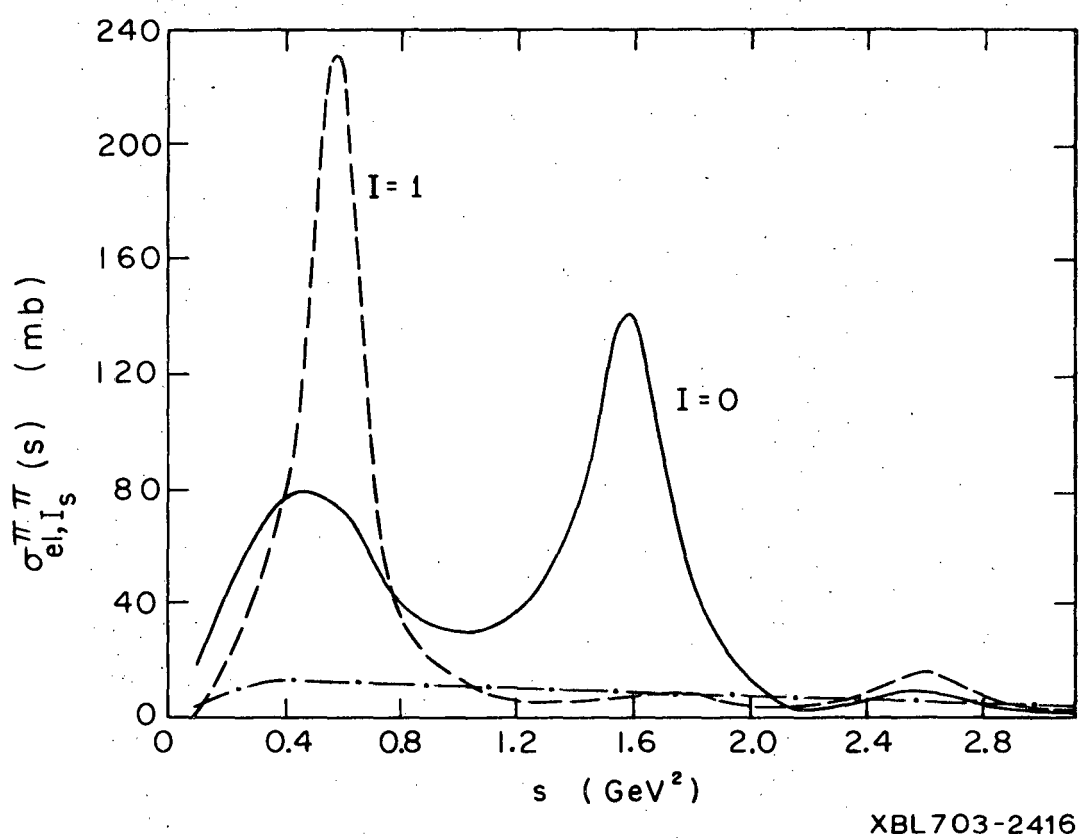
240
200
160
120
80
40
0
0
0.4
0.8
1.2
1.6
2.0
2.4
2.8
s (GeV²)
I = 1
I = 0
$\sigma^{\pi\pi}_{el,I_s}(s)$ (mb)
XBL703-2416

Fig. 4a

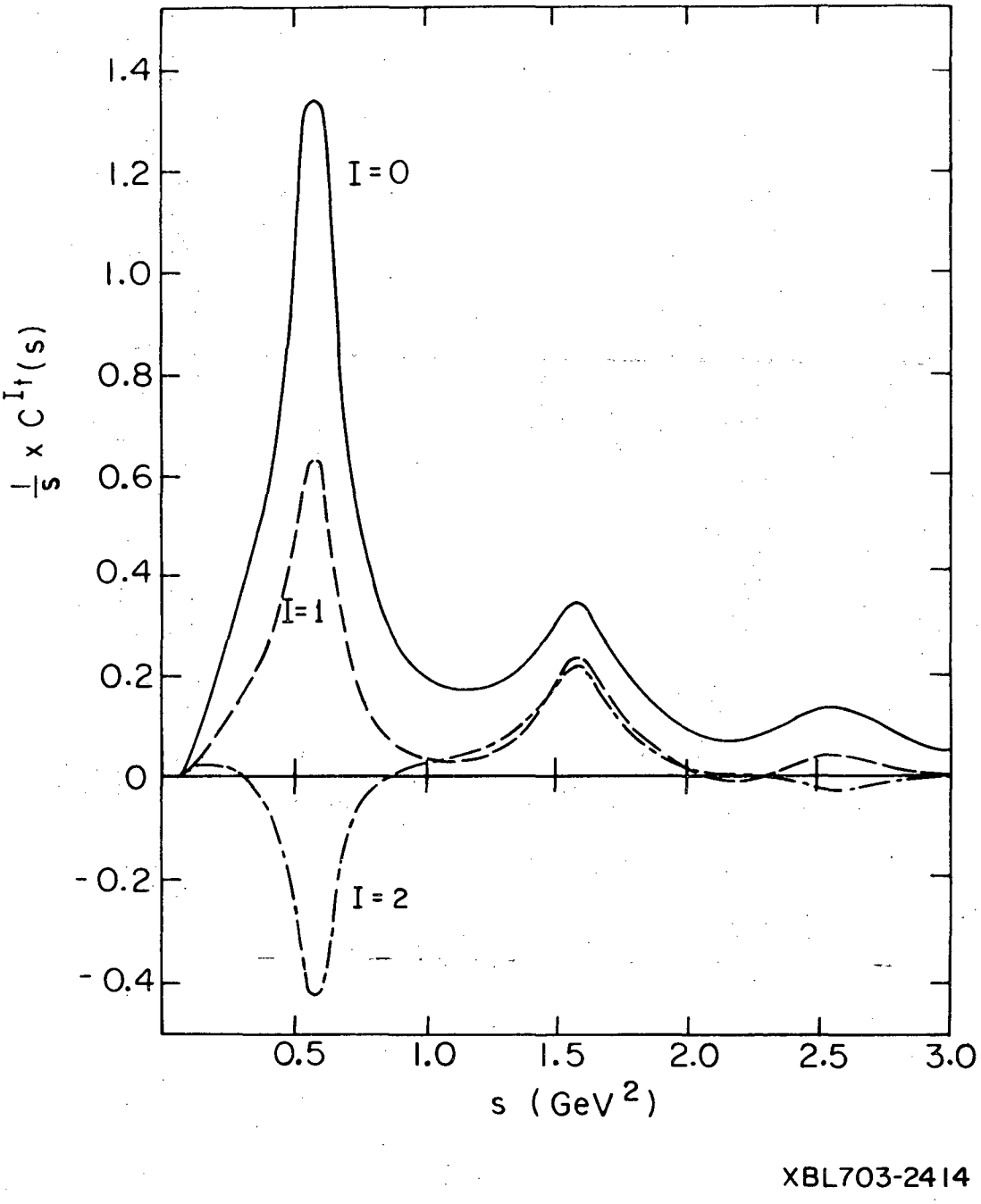

XBL703-2414

Fig. 4b

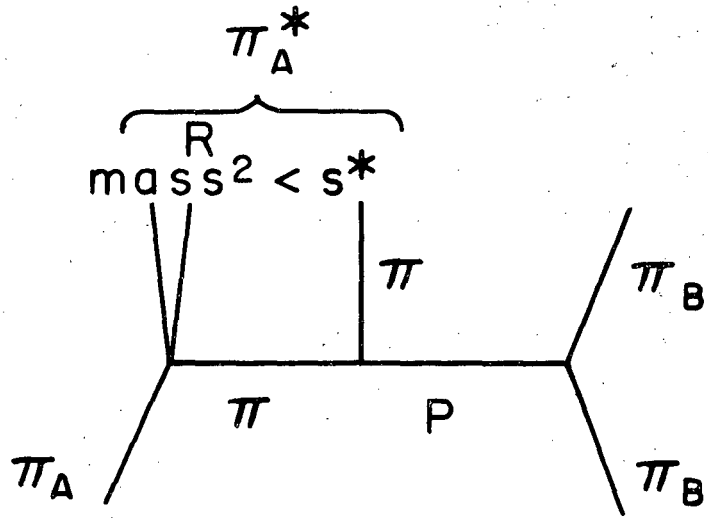

XBL703-2410

Fig. 5a

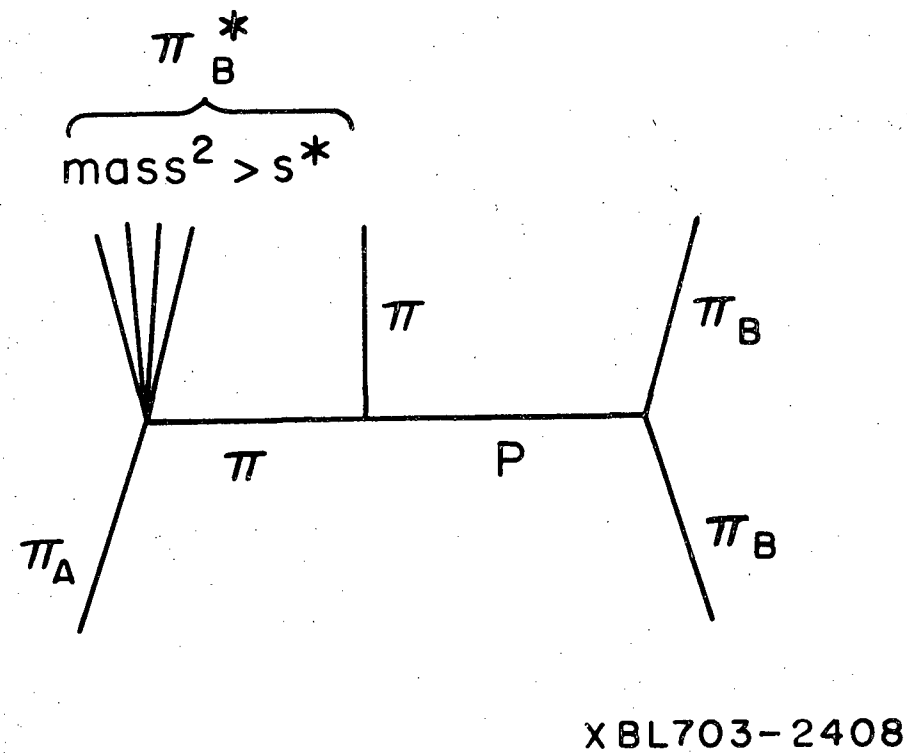

Fig. 5b

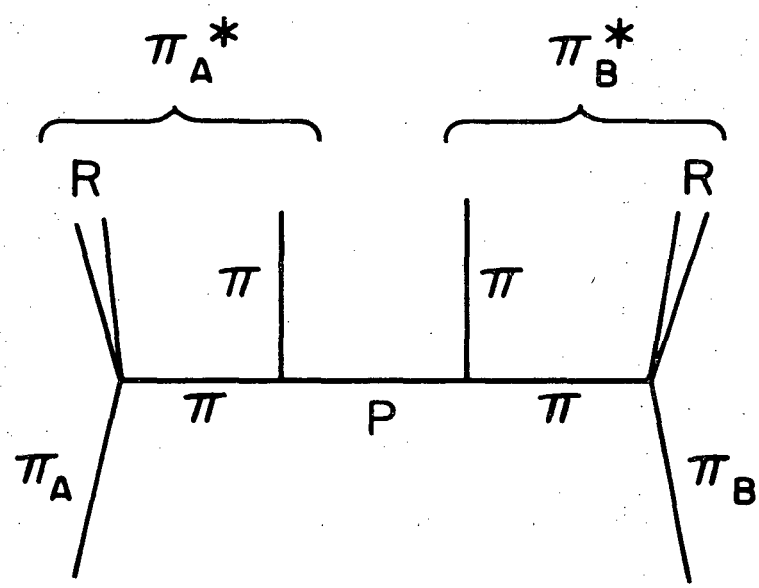

XBL703-2409

Fig. 5c

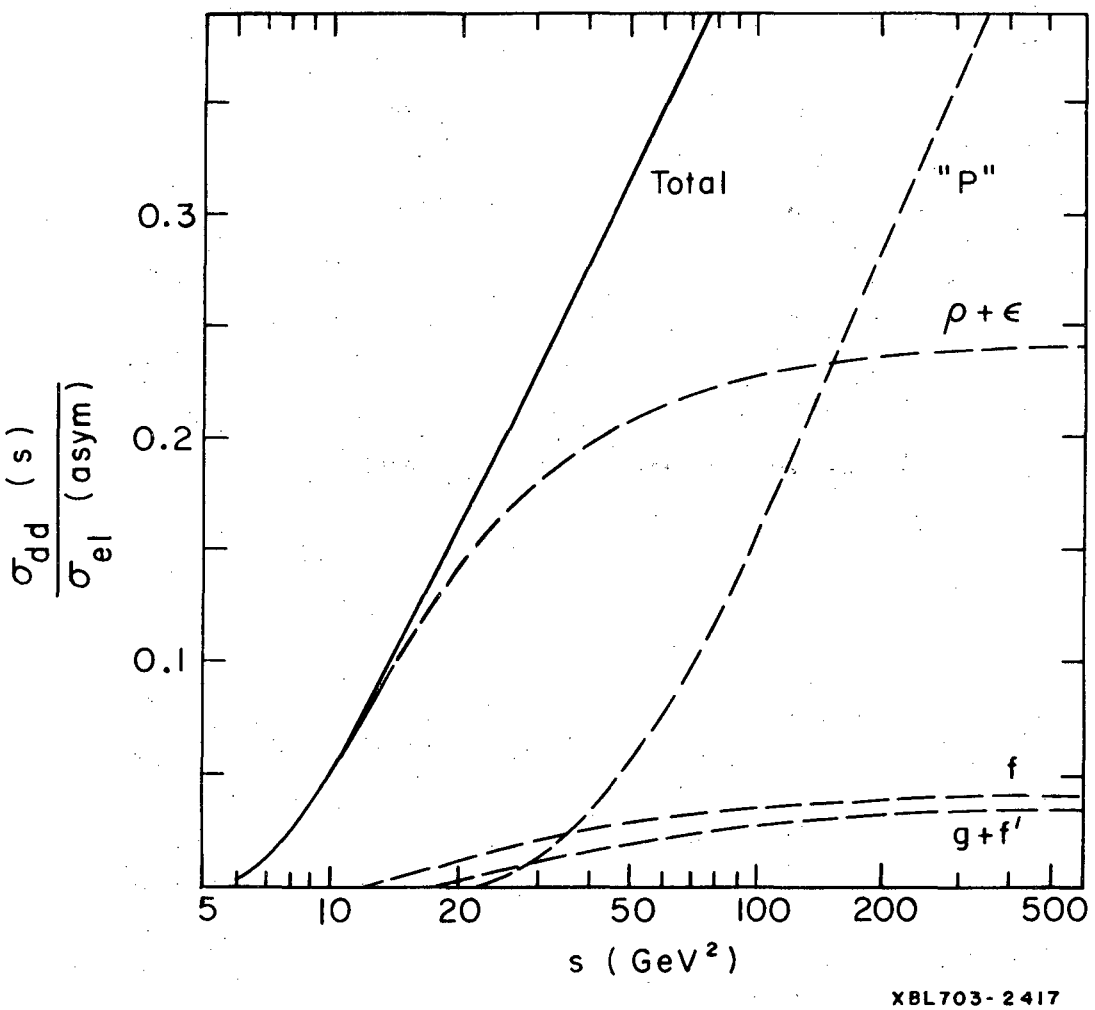
Total
"P"
ρ + ∈
f
g + f'
0.3
0.2
0.1
5
10
20
50
100
200
500
s (GeV²)
σdd (s) / σel (asym)
XBL703-2417

Fig. 6

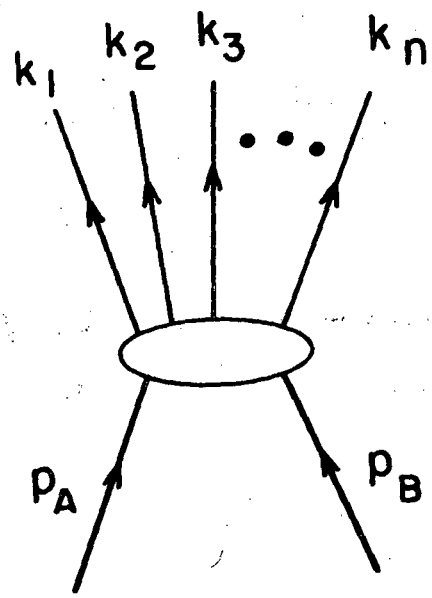

XBL703-2411

Fig. 7a

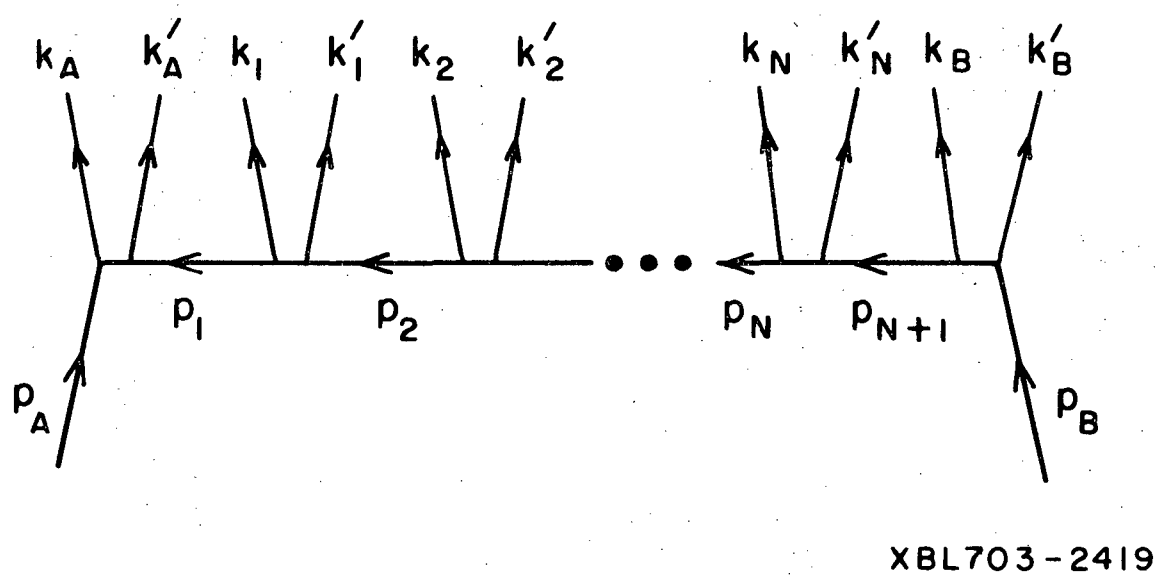

Fig. 7b

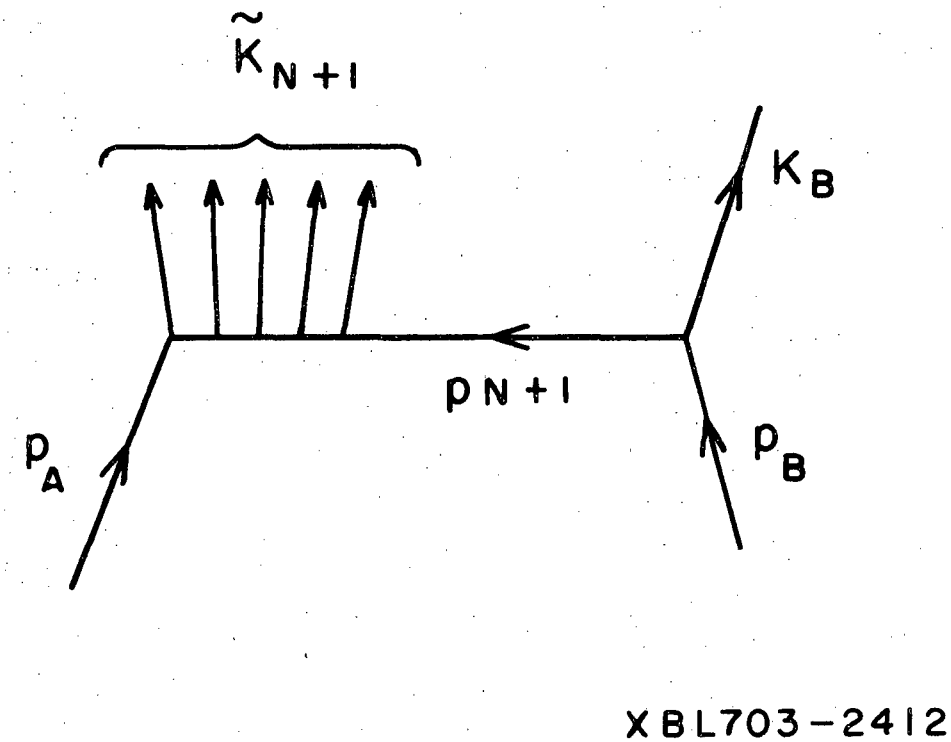

Fig. 8

LEGAL NOTICE

This report was prepared as an account of Government sponsored work. Neither the United States, nor the Commission, nor any person acting on behalf of the Commission:

A. Makes any warranty or representation, expressed or implied, with respect to the accuracy, completeness, or usefulness of the information contained in this report, or that the use of any information, apparatus, method, or process disclosed in this report may not infringe privately owned rights; or

B. Assumes any liabilities with respect to the use of, or for damages resulting from the use of any information, apparatus, method, or process disclosed in this report.

As used in the above, "person acting on behalf of the Commission" includes any employee or contractor of the Commission, or employee of such contractor, to the extent that such employee or contractor of the Commission, or employee of such contractor prepares, disseminates, or provides access to, any information pursuant to his employment or contract with the Commission, or his employment with such contractor.

TECHNICAL INFORMATION DIVISION
LAWRENCE RADIATION LABORATORY
UNIVERSITY OF CALIFORNIA
BERKELEY, CALIFORNIA 94720