UCRL-1895

UNCLASSIFIED

UNIVERSITY OF CALIFORNIA — BERKELEY

TWO-WEEK LOAN COPY

This is a Library Circulating Copy which may be borrowed for two weeks. For a personal retention copy, call Tech. Info. Division, Ext. 5545

RADIATION LABORATORY

DISCLAIMER

This document was prepared as an account of work sponsored by the United States Government. While this document is believed to contain correct information, neither the United States Government nor any agency thereof, nor the Regents of the University of California, nor any of their employees, makes any warranty, express or implied, or assumes any legal responsibility for the accuracy, completeness, or usefulness of any information, apparatus, product, or process disclosed, or represents that its use would not infringe privately owned rights. Reference herein to any specific commercial product, process, or service by its trade name, trademark, manufacturer, or otherwise, does not necessarily constitute or imply its endorsement, recommendation, or favoring by the United States Government or any agency thereof, or the Regents of the University of California. The views and opinions of authors expressed herein do not necessarily state or reflect those of the United States Government or any agency thereof or the Regents of the University of California.

DESIGN OF A TRIGGERED GAP

Leonard E. Gibson and Mark Harris II

Radiation Laboratory, Department of Physics,
University of California, Berkeley, California

July 15, 1952

INTRODUCTION

In many applications there is a need for high energy, high current pulses. Of fundamental importance in such problems is the switch which transfers the energy from the energy storage device to the load. Where high currents are desired, it is necessary that the impedance of the switch during discharge remain low. Both thyratrons and spark gaps serve satisfactorily as high current switchs. Where exceptionally high currents must be handled, the inductance of the leads in a thyratron may prove a limiting factor. Since a spark gap does not suffer from this limitation, work was inaugurated to develope a triggered spark gap having low inductance, high current carrying capacity and a minimum time jitter, (i.e., the variation in the time delay after the start of the trigger pulse should be minimum.)

The specific requirements were as follows:

1. A pulse current of approximately 10,000 amperes.
2. An operating voltage range of from 10 to 15 kilovolts.
3. A time jitter not to exceed 25×10^{-9} seconds.
4. A unit which could be operated immersed in oil (i.e., a sealed unit.)
5. A unit which would be simple to construct, rugged, and compact.

In view of its simplicity, a coaxial trigger was selected. Such a gap has a trigger pin inserted in the face of one of the gap surfaces, (in this

case the one at ground potential), and is fired by initiating a discharge between the pin and the gap surface in which it is located.

DESIGN OF GAP

Figures 1 through 3 are the fabrication drawings for the ball gap electrodes and spacer. Figure 4 shows an exploded view of the various parts before assembly.

As shown in Fig. 4, a small steatite tube is used to insulate the trigger pin from the ball gap surface. In addition, the steatite serves to stabilize the trigger arc since after several operations a path is etched on its surface insuring operation at the same point in subsequent operations. As described below, additional steps were taken to make certain the trigger arc occurred in the same position during each operation.

The operating voltage of the gap determined roughly the spacing required. It had been previously ascertained that minimum jitter could be obtained when the ratio of main gap spacing to the trigger gap spacing was approximately 4 to 1. Thus the trigger spacing was more or less defined by the operating voltage. In setting up the final dimensions, a standard steatite tube was selected whose wall thickness corresponded closely to the estimated trigger gap. The spacer used was a .093" I.D. by .187" O.D. steatite tube manufactured by the American Lava Co., Chattanooga, Tenn. Thus, the trigger gap spacing was .047 inches which indicated (using the above ratio) the main gap spacing should be .188 inches. With this spacing and 2 inch radius spherical segments, the static breakdown in air (760 mm, 25°C) is 16 kv,* or approximately 1 kv above the highest operating voltage.

*Handbook of Chemistry and Physics, 32nd edition, pg. 2106.

The gap surfaces and end plates were made as a single unit of dural metal, and required no special machining. The ball gap faces were brought to a high finish using a commercial metal polish and were carefully cleaned prior to assembly. Both plates were carefully finished to remove all burrs and sharp corners.

The lucite spacer is grooved to carry "O" rings so that sealed off, oil immersed operation is possible. The width of the spacer determines the static breakdown voltage. On the fabrication drawing no dimension is given for the width of the spacer, since this value depends on the operating voltage of the gap. The gap used for the investigation required a spacer having a width of .688".

The trigger pin consisted of a 2 inch long piece of 80 mil tungsten rod. The end of this rod was ground to a wedge shape and relieved as shown in Figs. 4 and 5. This process, (and one other described below), was instituted to stabilize the trigger arc.

Before the final assembly, the gap without trigger (Fig. 6) was subjected to a voltage slightly above static breakdown and allowed to break down approximately 25 times. The purpose of this process was to mark the gap surfaces at the "preferred spots." The gap was then disassembled, and the surfaces examined. Figures 7 and 8 show the appearance of the surfaces following this operation. In the final assembly of the gap, the trigger pin is oriented so that the pointed end faces the "preferred spot."

In the final assembly, a Kovar seal (.105" I.D. by .281" H.D. by 11/16" O.L., Stupakoff Ceramic and Mfg. Co., Latrobe, Pa., No. 952008) was fastened to the gap stem, the trigger inserted and correctly oriented and fastened to the Kovar seal. In this case, both the Kovar seal and the trigger pin were affixed with araldyte, although other methods are equally adaptable.

After assembly, the gap was once again subjected to high voltage and allowed to spark over until the static breakdown voltage had stabilized. It was observed that during the "seasoning" process the voltage required for static breakdown would increase slightly during the first twenty to thirty operations, and then fall to a value very slightly below that required at the start of the process. Approximately 150 to 200 operations were required before the static breakdown voltage stabilized.

TRIGGER PULSER

The manner in which the trigger gap is fired determines, to a large extent, the jitter of the system. It is believed that the trigger operates through a combination of the following effects:

1. The production of ions and ionizing electrons.
2. The production of ultra-violet radiation.
3. The increase in voltage gradient across the main gap.

In order that item (3), above, be effective, it is important that the polarity of the pulse applied to the trigger pin be the same as the polarity of the ball in which it is centered. For example, in the circuit used, the trigger was placed in the negative (in this case, grounded) ball and the trigger was fired with a negative pulse.

All of the above items indicate that the trigger gap should be fired from a low impedance source capable of supplying high energy to the arc. In order that the trigger gap fire with a minimum of time delay and time jitter, a large overvoltage should be applied and this voltage should have as fast a rise time as possible. In addition, the circuit supplying the trigger pulse should have negligible time jitter.

In the test gap the voltage applied to the trigger gap was nearly four times that required for static breakdown. Thus the voltage applied to the trigger gap was equal to the main gap voltage, and in several cases exceeded it. It was subsequently found that this produced a large margin of safety, since a change of 50% in the trigger firing voltage failed to affect the operation of the gap.

The circuit for the trigger pulser unit is shown in Fig. 9. The 3C45 operated with a plate voltage of 3 kv, and used with a four to one step-up pulse transformer, developed sufficient voltage and power to reduce the trigger gap jitter to a negligible amount. The grid of the 3C45 was driven with a pulse of 1 kv rising to peak value in 1 billisecond (1×10^{-9} sec.). The impedance of the source was 50 ohms.

The pulse transformer was wound on a standard 1/2" x 1-13/16" hypersil core. The primary, consisting of five turns of 1/2" x .005" copper strap, was strap wound. The secondary consisted of 20 turns of No. 23 formvar wire. Another pulse transformer, (built for use in a slightly different circuit), using the same core and same number of primary and secondary turns but having interleaved, strap wound primary and secondary, allowed a lower impedance circuit to be obtained, but time did not permit complete tests on this unit.

To test the gap under actual conditions, a high voltage circuit was constructed as shown in Figs. 10 and 11. Ten General Electric pyranol pulse capacitors were arranged in a circle and connected to two heavy, circular, copper sheets. A 5" diameter section was removed from the upper plate. The gap was located at the center of the bottom plate, and connected to the upper plate by six copper straps. A 5-15 kv, 1 ma power supply (Fig. 12) was used to charge the capacitor bank through a 5 megohm charging resistor.

The jitter measurements were made using a scope having a sweep speed of 2.5×10^{-9} seconds/cm. The scope was triggered by the same pulse that fired the grid of the 3C45 and the scope signal derived from either a loop in the vicinity of the gap or by measuring the voltage drop between two closely spaced points along the current path. In order to meet the requirement of less than 25 billiseconds jitter, it was sufficient that the signal indicating the discharge of the gap remain on the 10 cm screen.

RESULTS

The equipment as described above was set up and operated by an automatic cycler and counter. The gap was discharged at 30 second intervals over a period of several days. Over 5000 firings were counted, and of these more than half were observed and many groups were photographed. In all of the monitered firings, the observed jitter was less than 25×10^{-9} seconds. Photographs (Figs. 13 and 14) show the gap surfaces at the completion of the tests. Despite the severe erosion of the surfaces the time jitter at the completion of the test was still within the specified requirements.

CONCLUSIONS

Due to the limitations of time, it was not possible to persue many interesting modifications of the basic design. Originally it was hoped that the investigation could include operation in inert atmospheres, pressurized operation, variation of trigger pin and gap surface material, and various configurations of the gap surfaces.

However, the brief investigation conducted disclosed a number of interesting points. It was observed that the time jitter could be

reduced by the following operations:

1. Shaping the trigger pin.
2. Stabilizing the trigger gap by firing over a ceramic insulator.
3. Allowing the firing point to occur at a "preferred position."
4. Operating the gap at a voltage near static breakdown voltage.
5. Allowing the gap to operate under static breakdown conditions previous to actual triggered operation.
6. Providing low impedance circuits throughout the entire trigger chain.
7. Providing high amplitude, fast rising pulses to the thyratron grid and, especially, to the trigger pin itself.

Extreme precautions are necessary in connecting the measuring equipment to minimize the disturbing effects caused by the fields resulting from the main gap discharge. A common copper ground plane should be provided for all components especially measuring equipment, and all shields and grounded wires should be bonded to the ground plane.

SHOWN ON				JOB NO.	SER. NO.	DATE ISSUED	DATE REQ'D	NO. REQ'D	DELIVER TO	
								MATERIAL	61S-T6 ALUM. ALLOY	

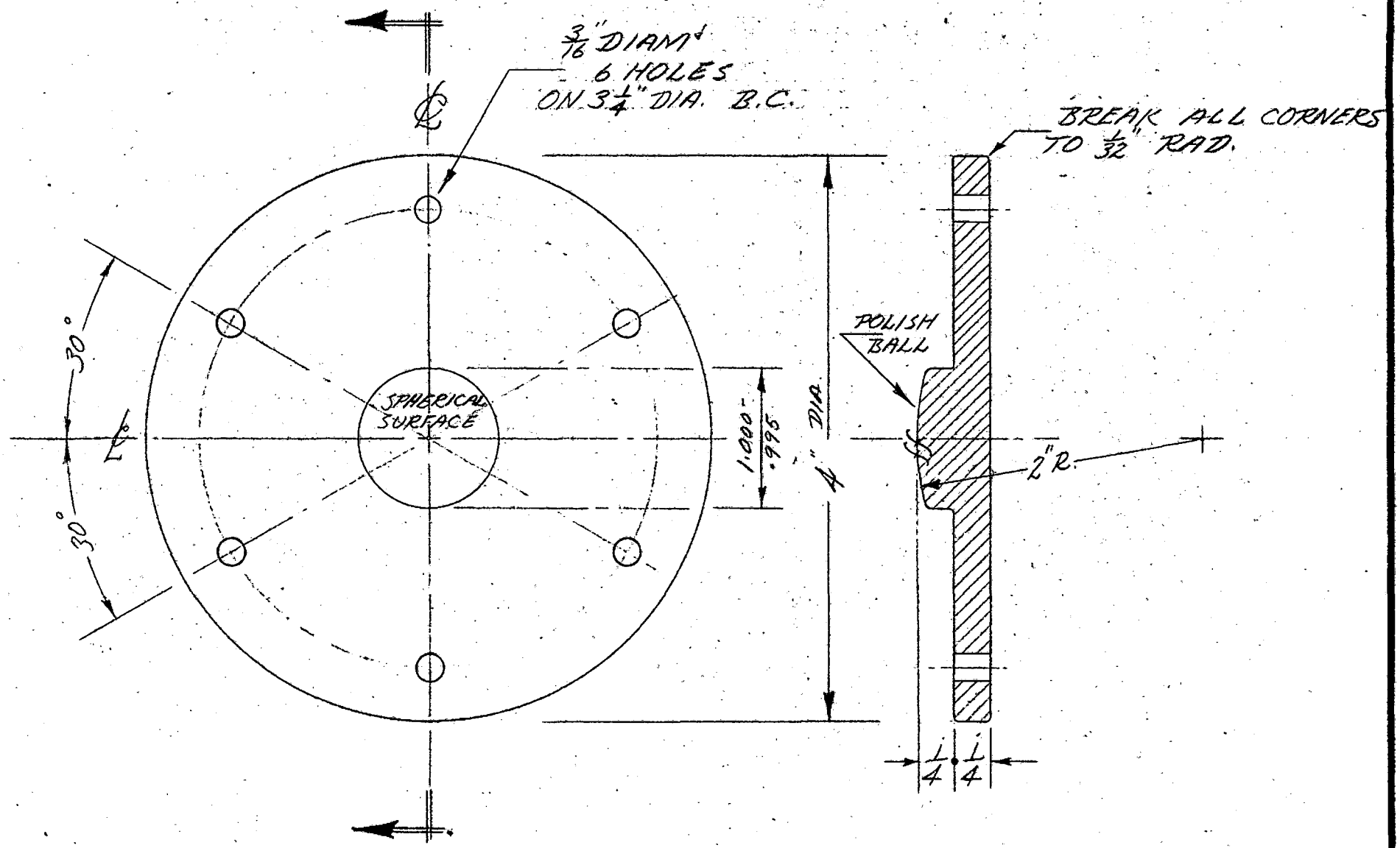

Change Letter	Drawn By	Check By	Date	CHANGES

SAW CUT, FLAME CUT, SHEAR
ROUGH MACHINE
AVERAGE MACHINE
SMOOTH MACHINE

UNLESS OTHERWISE SPECIFIED
1. TOLERANCES ± ON DIMENSIONS
2. BREAK EDGES 1/64 MAX.
3. 30° CHAMFER ENDS OF ALL SCREW THREADS
4. 1½ PITCH THREAD RELIEF WITH ROUND NOSE TOOL ON MACH. CUT SCREW THREADS

SCALE FULL		BALL GAP
DESIGN JOB NO. 4210-03	DATE	
DRAWN BY F. W. Hawbrook	7/11/52	ELECTRODE NO. 1
CHECK BY JCT	7/11/52	RADIATION LABORATORY UNIVERSITY OF CALIFORNIA BERKELEY
APPR. BY H Bush	7-14-52	3W5491

SHOWN ON				JOB NO.	SER. NO.	DATE ISSUED	DATE REQ'D	NO. REQ'D	DELIVER TO	
								MATERIAL 61S-T6 ALUM. ALLOY		

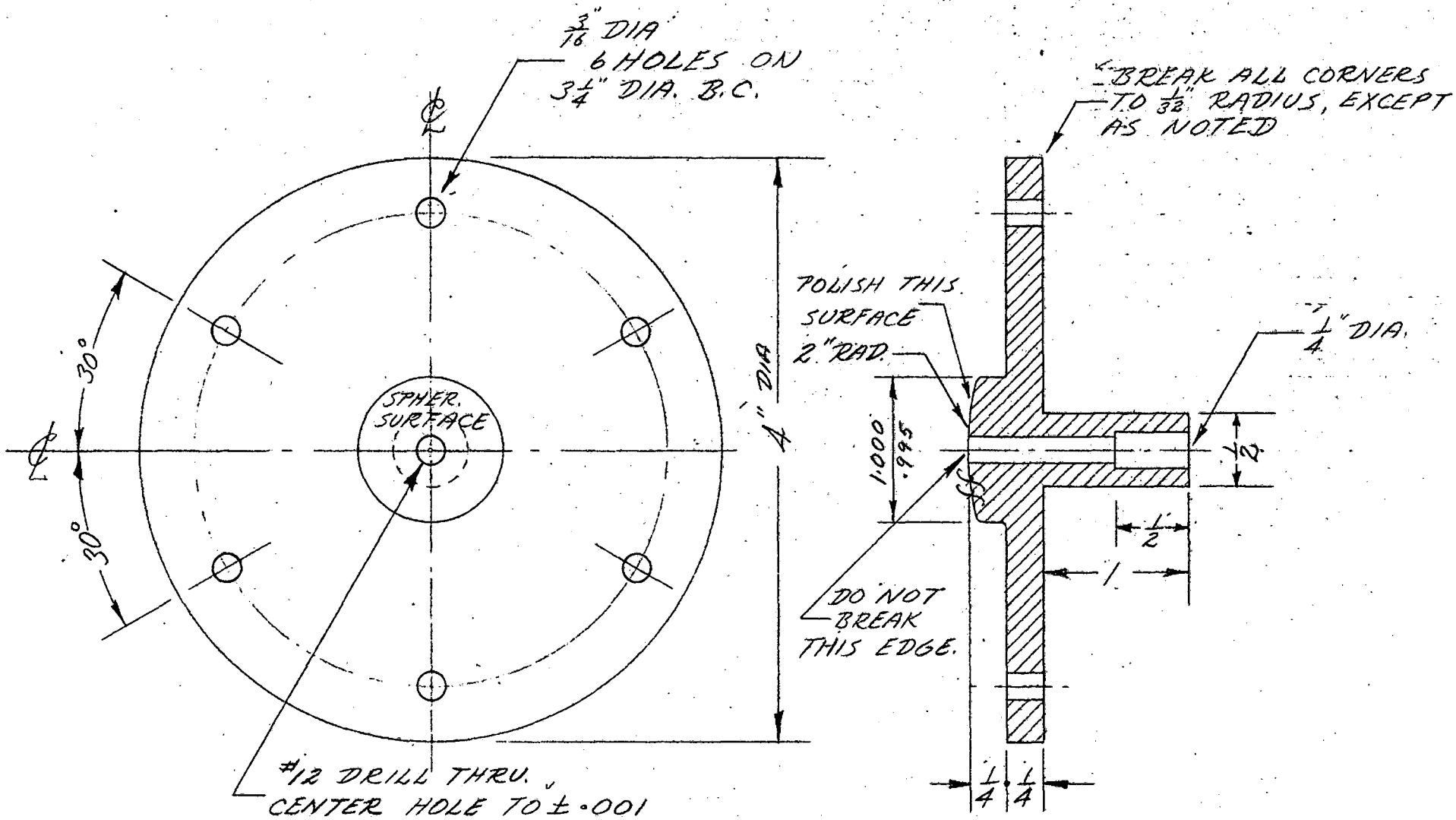

Change Letter	Drawn By	Check By	Date	CHANGES

SAW CUT, FLAME CUT, SHEAR
ROUGH MACHINE
AVERAGE MACHINE
SMOOTH MACHINE

UNLESS OTHERWISE SPECIFIED
1. TOLERANCES + ON DIMENSIONS ±
2. BREAK EDGES 1/64 MAX.
3. 30° CHAMFER ENDS OF ALL SCREW THREADS
4. 1½ PITCH THREAD RELIEF WITH ROUND NOSE TOOL ON MACH. CUT SCREW THREADS

SCALE FULL		
DESIGN JOB NO. 4210-03	DATE	
DRAWN BY F. W. Hawbrook	7/11/52	
CHECK BY JCT	7/14/52	
APPR. BY Bush	7-14-52	

BALL GAP

ELECTRODE NO. 2

RADIATION LABORATORY
UNIVERSITY OF CALIFORNIA
BERKELEY

3W5501

SHOWN ON				JOB NO.	SER. NO.	DATE ISSUED	DATE REQ'D	NO. REQ'D	DELIVER TO	1

MATERIAL LUCITE

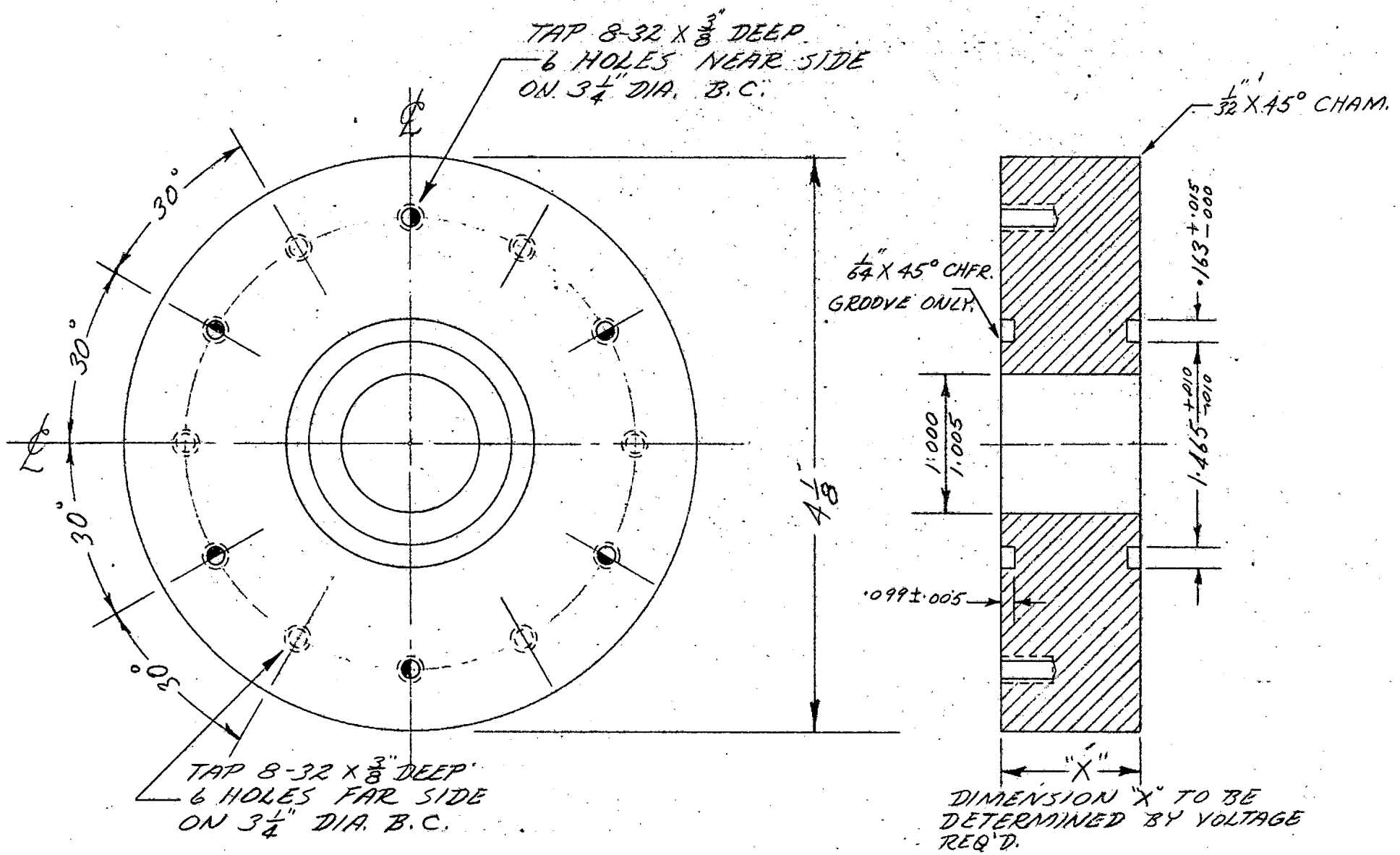

DIMENSION "X" TO BE DETERMINED BY VOLTAGE REQ'D.

Change Letter	Drawn By	Check By	Date	CHANGES

SAW CUT, FLAME CUT, SHEAR
ROUGH MACHINE
AVERAGE MACHINE
SMOOTH MACHINE

UNLESS OTHERWISE SPECIFIED
1. TOLERANCES ± ON DIMENSIONS
2. BREAK EDGES 1/64 MAX.
3. 30° CHAMFER ENDS OF ALL SCREW THREADS
4. 1½ PITCH THREAD RELIEF WITH ROUND NOSE TOOL ON MACH. CUT SCREW THREADS

SCALE FULL		BALL GAP
DESIGN JOB NO. 4210-03	DATE	
DRAWN BY F. W. Hawbreck	7/11/52	ELECTRODE SPACER PLATE
CHECK BY JCT	7/[illegible]/52	RADIATION LABORATORY UNIVERSITY OF CALIFORNIA BERKELEY
APPR. BY H Bush	7-14-52	3W5481

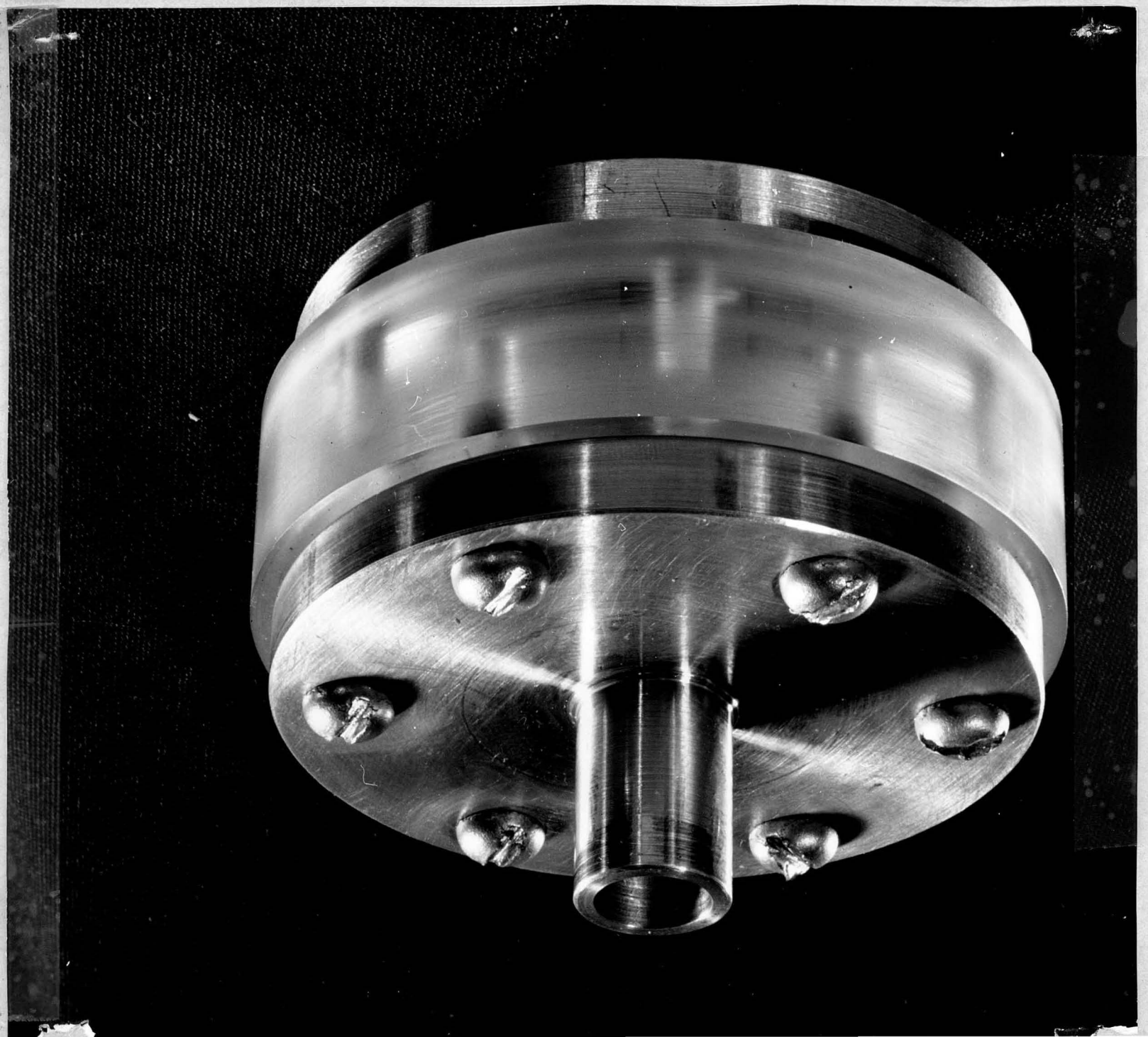

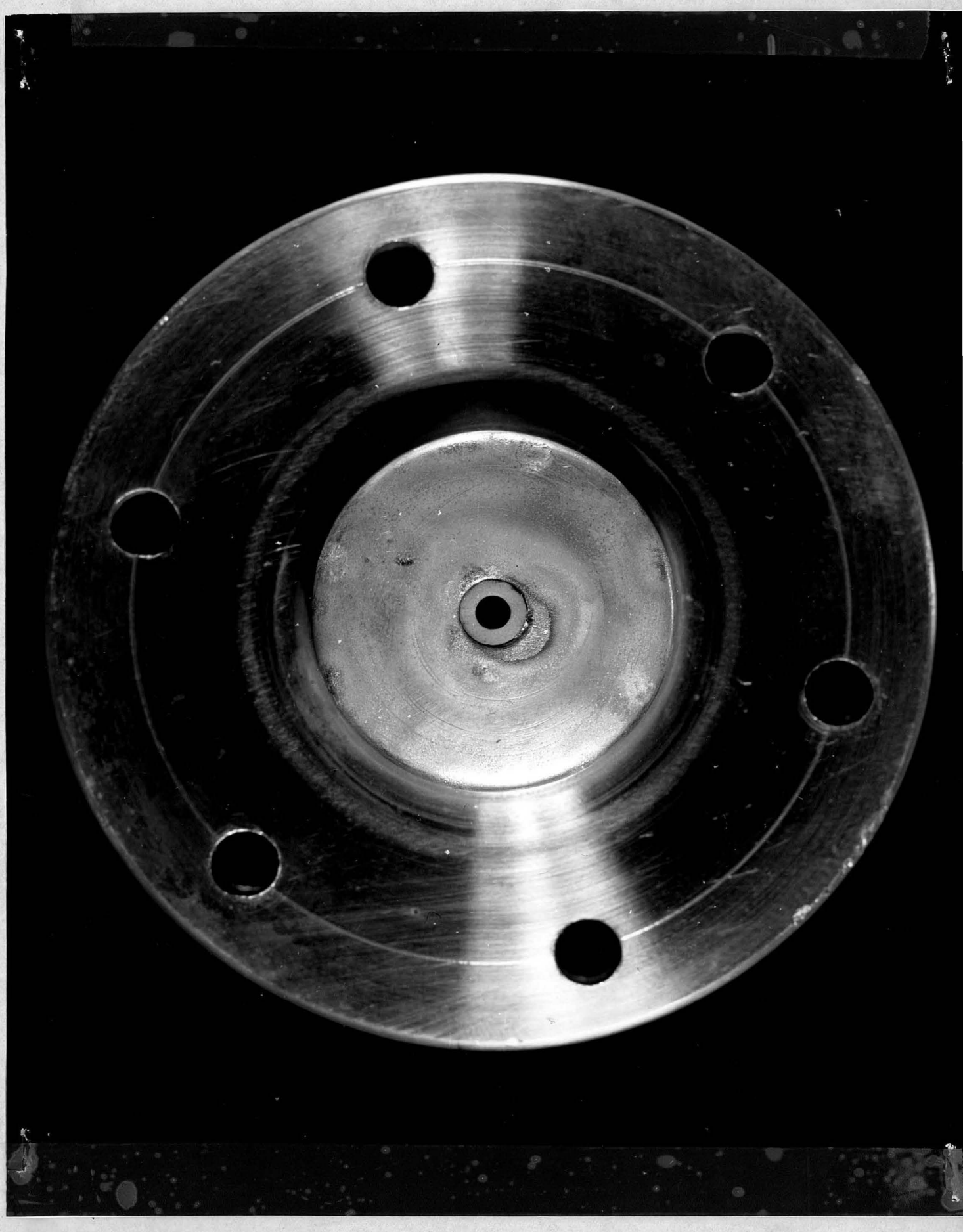

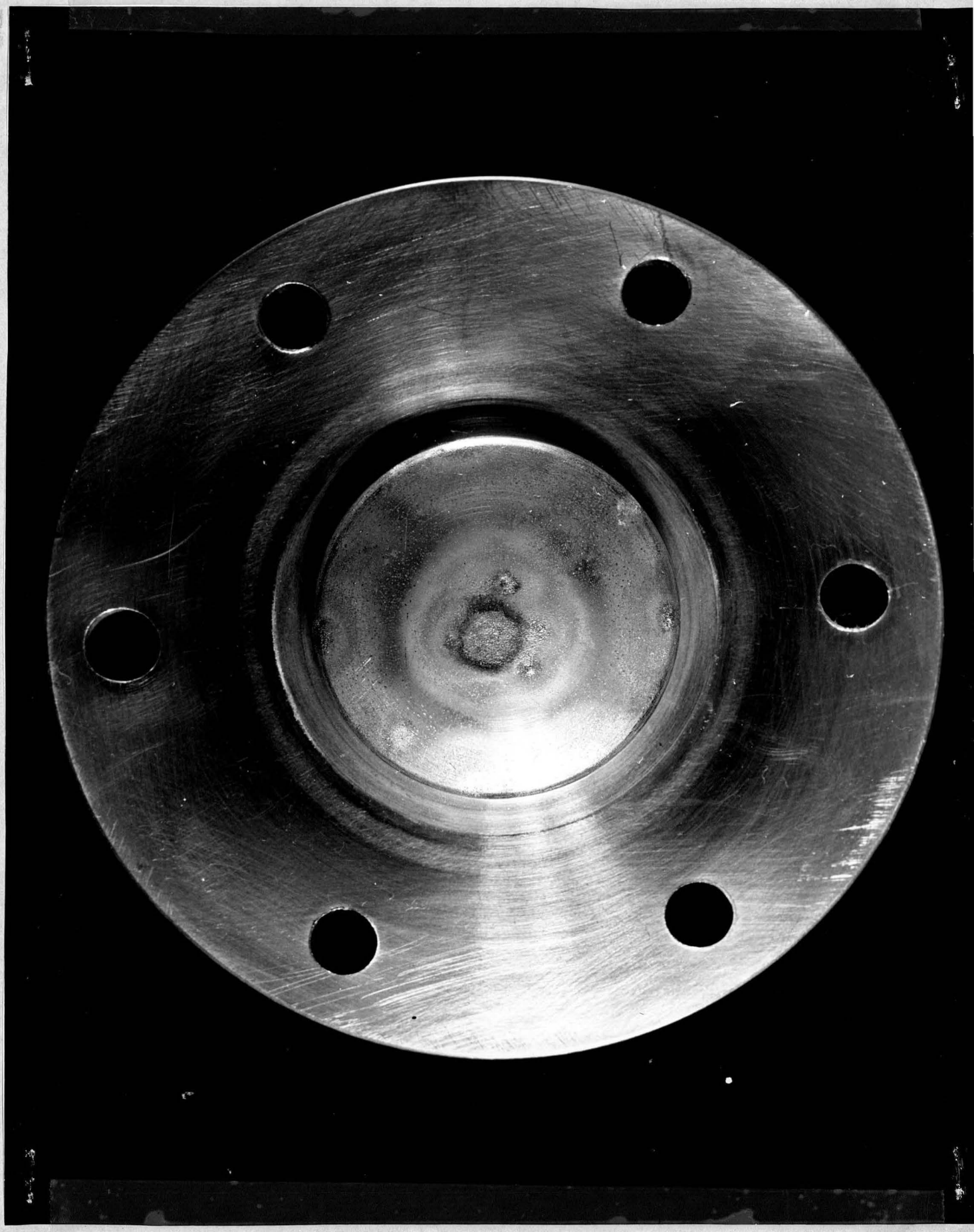

SUBJECT	SKETCH	JOB ORDER INFORMATION	
WIRING DIAGRAM.	RADIATION LABORATORY UNIVERSITY OF CALIFORNIA - BERKELEY	JOB NO. 4210-03	TAG NO.
DRAWN BY: L.E. Gibson		SERIAL NO.	NO. REQD.
		DATE ISSUED	DATE REQD.
DATE 7/14/52	BUILDING NO. / ROOM NO. / APPROVED BY / DATE	DELIVER TO	

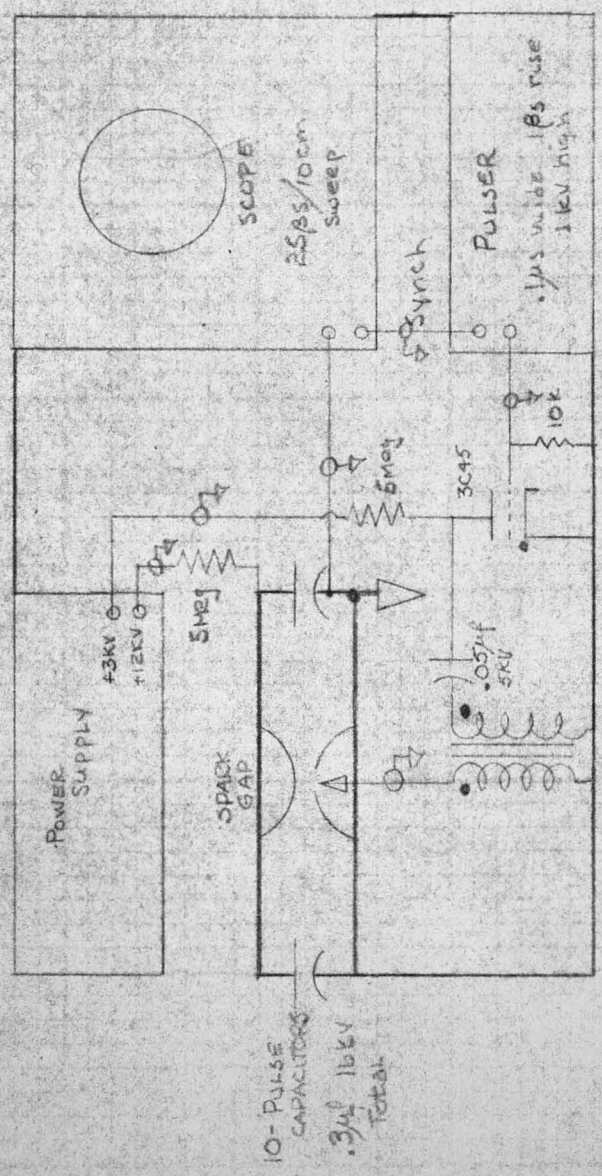

SKETCH NUMBER

Figure 9

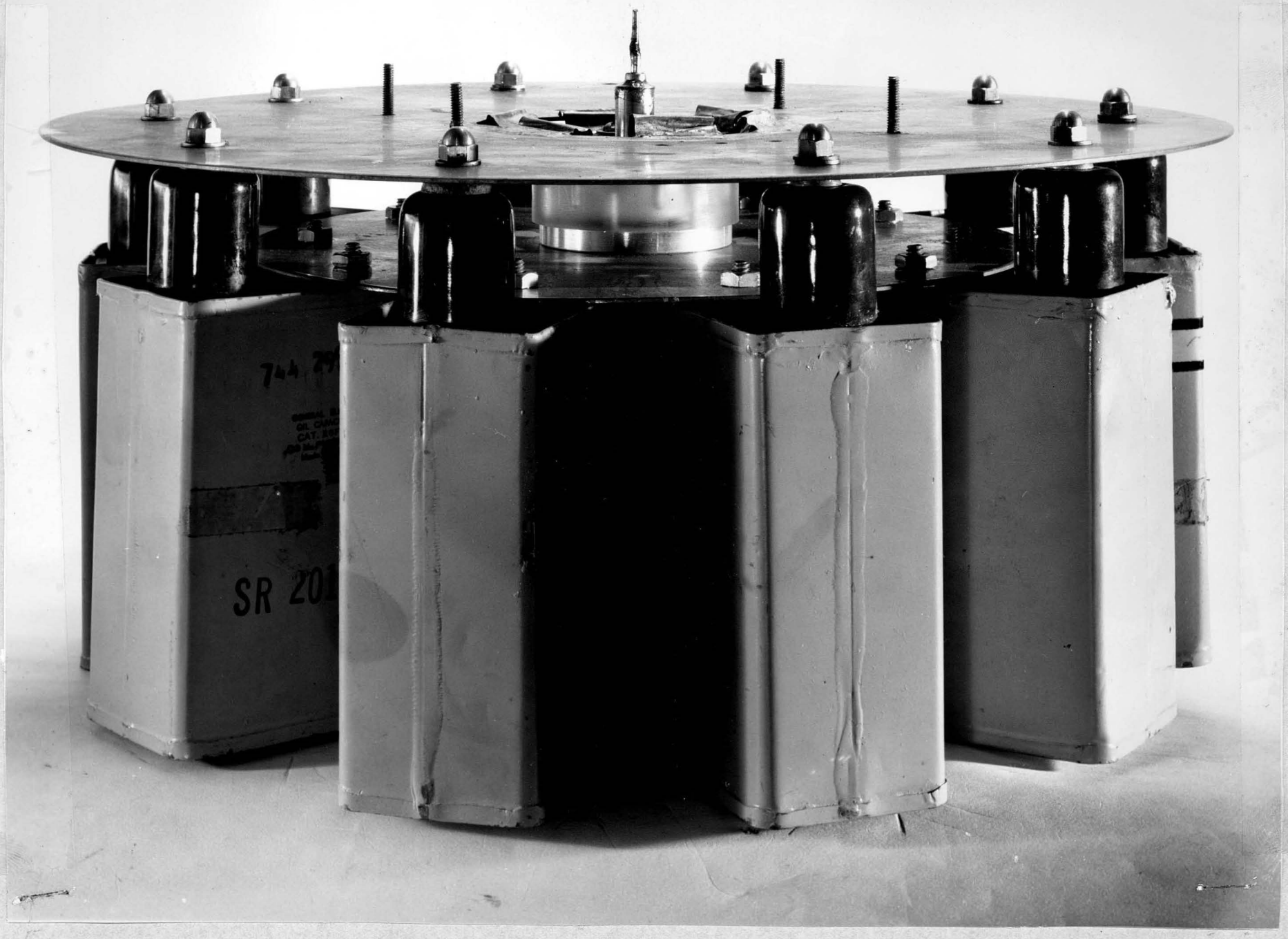
SR 20

SR 20

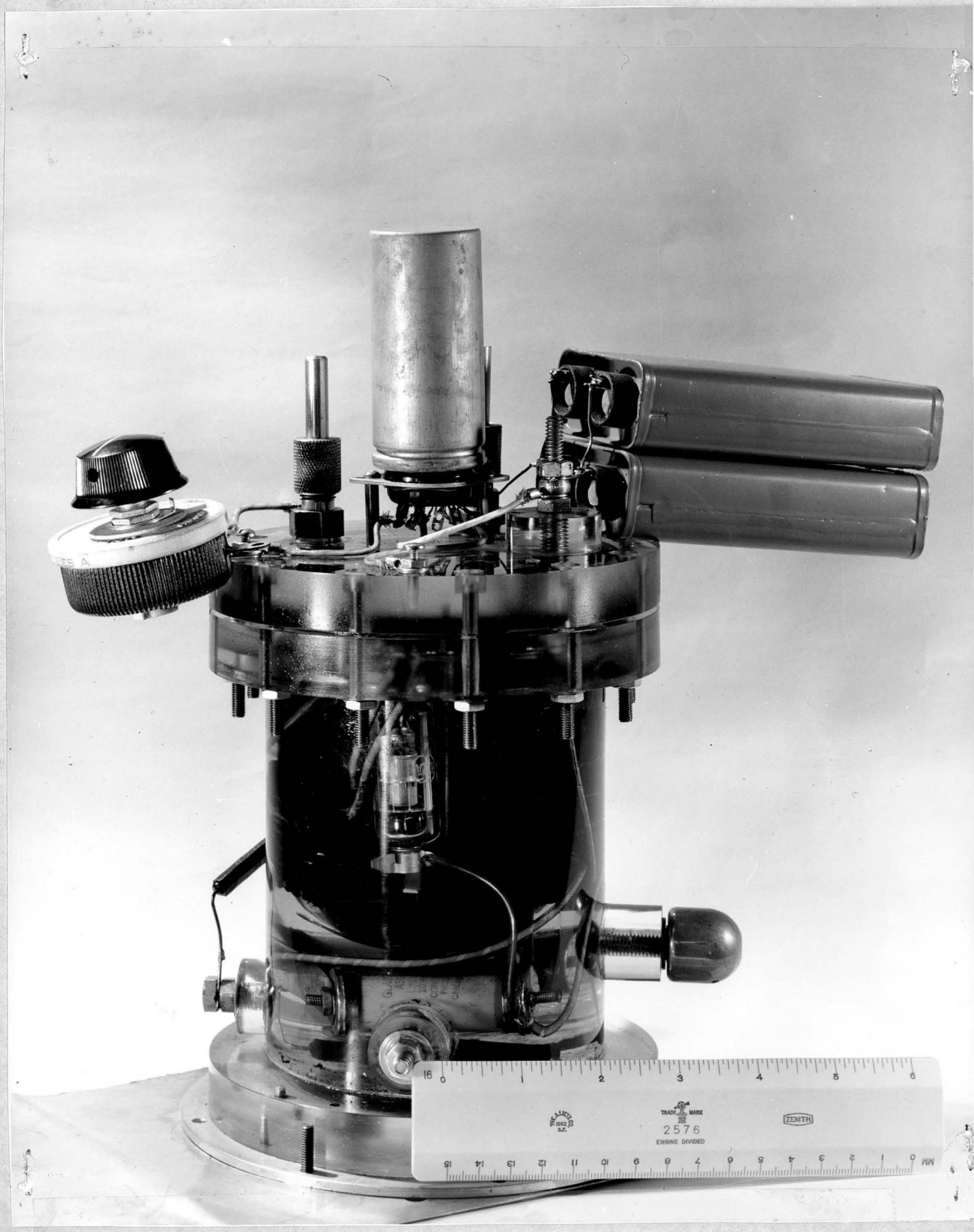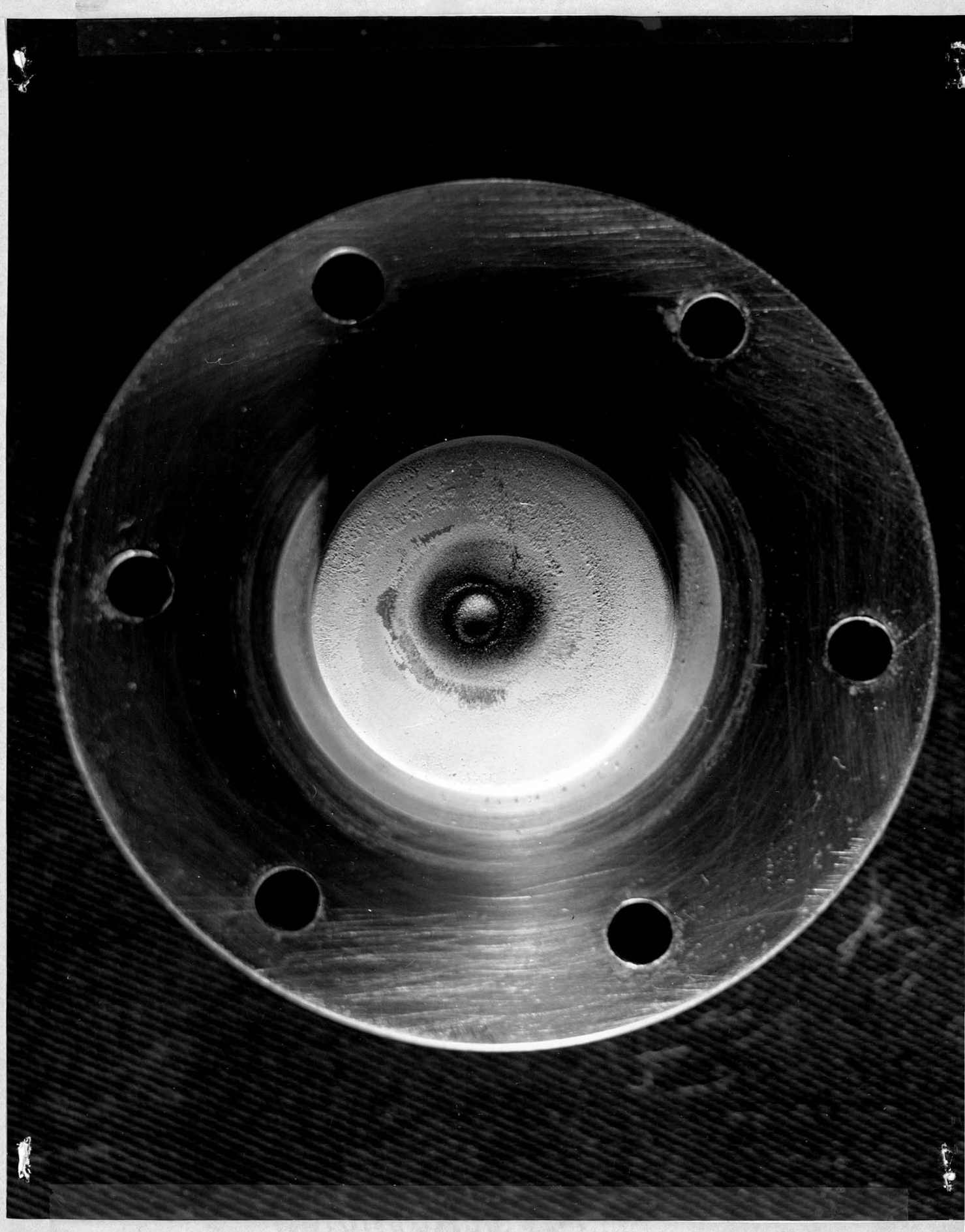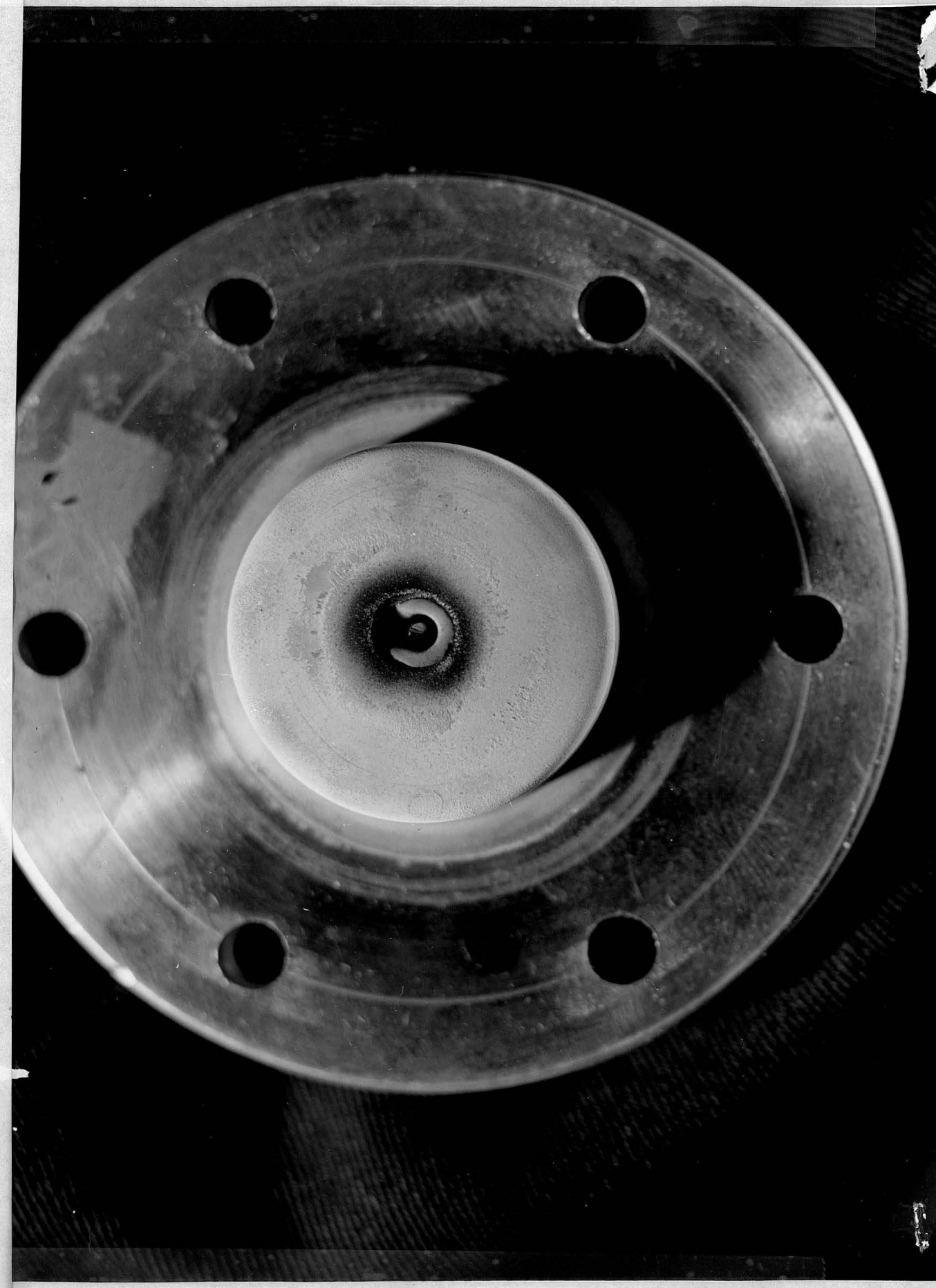
TRADE MARK
2576
ENGINE DIVIDED
ZENITH