Submitted to Physical Review Letters

UCRL-19864
Preprint

c. 2

RECEIVED
LAWRENCE
RADIATION LABORATORY

JUL 21 1970

LIBRARY AND
DOCUMENTS SECTION

PRECISION MEASUREMENT OF THE MAGNETIC MOMENT OF THE MUON

J. F. Hague, J. E. Rothberg, A. Schenck,
D. L. Williams, R. W. Williams, K. K. Young, and K. M. Crowe

June 1970

AEC Contract No. W-7405-eng-48

TWO-WEEK LOAN COPY

This is a Library Circulating Copy
which may be borrowed for two weeks.
For a personal retention copy, call
Tech. Info. Division, Ext. 5545

UCRL-19864
Cy. 2

LAWRENCE RADIATION LABORATORY
UNIVERSITY of CALIFORNIA BERKELEY

34

DISCLAIMER

This document was prepared as an account of work sponsored by the United States Government. While this document is believed to contain correct information, neither the United States Government nor any agency thereof, nor the Regents of the University of California, nor any of their employees, makes any warranty, express or implied, or assumes any legal responsibility for the accuracy, completeness, or usefulness of any information, apparatus, product, or process disclosed, or represents that its use would not infringe privately owned rights. Reference herein to any specific commercial product, process, or service by its trade name, trademark, manufacturer, or otherwise, does not necessarily constitute or imply its endorsement, recommendation, or favoring by the United States Government or any agency thereof, or the Regents of the University of California. The views and opinions of authors expressed herein do not necessarily state or reflect those of the United States Government or any agency thereof or the Regents of the University of California.

PRECISION MEASUREMENT OF THE MAGNETIC MOMENT OF THE MUON*

J. F. Hague, J. E. Rothberg, A. Schenck, D. L. Williams, R. W. Williams, and K. K. Young

Physics Department
University of Washington
Seattle, Washington, 98105

and

K. M. Crowe

Lawrence Radiation Laboratory
University of California
Berkeley, California 94720

Received 15 June 1970

The ratio of muon to proton magnetic moment (μ_μ/μ_p) has been measured to high precision in three chemical environments; the agreement shows that the "Ruderman correction" is not applicable. The result is $\mu_\mu/\mu_p = 3.183347(9)$ (2.8 ppm); in terms of the muon mass, this implies $m_\mu/m_e = 206.7683(6)$.

The ratio of muon to proton magnetic moment, $\mu_\mu/\mu_p = (g/m)_\mu/(g/m)_p$ is needed to extract the muon's anomalous magnetic moment, $(g-2)/2$, from the observed frequency in a "g-2" experiment, $\omega_{g-2} = (g-2)eB/4\,mc$. Of more immediate interest, it enters in the relation between the muonium hyperfine splitting, ν_m, and the fine structure constant, α. The three most recent measurements, which have errors of 13 to 22 parts per million (ppm), are not sufficiently precise to take advantage of the accurate muonium results now available.[4, 5] Ruderman[6] suggested that the substantial discrepancy between α determined from hydrogen hfs and from the then-current muonium hfs and the Columbia value[1] of μ_μ/μ_p could be partially reconciled by applying to the

latter a chemical correction amounting ≈ 15 ppm. We report[7] new high-precision measurements of μ_μ/μ_p which are 10 ppm below the Columbia result; we show that the Ruderman correction[6] is not applicable; and we find that two newly reported muonium results[4, 5] bracket the value for ν_m predicted by our ratio and the currently accepted value of α.

The method is to use the muon decay asymmetry to observe the precession frequency, geB/2mc, of a sample of polarized positive muons at rest in a magnetic field, and to observe the resonance frequency of protons in the same field. A 200-MeV/c muon beam was obtained from pions produced at the LRL 184-inch cyclotron. Figure 1 represents the arrangement of counters and target in the magnet. The stopped-muon logic was (Beam)$HM_{dynode}\overline{S1S2A1A2}$, and the decay electron was Se(E1 or E2)$_{dynode}\overline{S4S1A1A2M}_{dynode}$. Timing signals from the muon counter M and the electron counters E were presented to fast discriminators with thresholds set 1/4th the trigger thresholds; the output signals were then passed by gated discriminators that were gated on (in a few nanoseconds) if the logic requirements had been met. These gated timing signals then opened (M) and closed (E) the gates of fast scalers which scaled a free-running oscillator. The timing between the muon and electron signals was done by two independent systems: a "digitron" with an effective least count of 1.25 nsec obtained from a 400-MHz clock and two suitably phased scaling systems, and a Hewlett-Packard timing counter (HP5360A) based on a 10-MHz clock and internally converted analogue interpolation. The digital information on each event included the two time interval measurements and records of extra counts which could affect the data: second counts in either the E channel or the M channel during the time the gate was open, and any count in an E counter during the 5 μsec preceding the gate opening. This information was stored by an

on-line computer, and every few seconds was transferred to magnetic tape along with the digital record of the proton NMR frequency of the "monitor" probe. Details of the method and the many checks on the system will be published elsewhere. The most important point is that the elapsed time for each muon-electron event is recorded with a simple and direct method by counting cycles of a free-running crystal-controlled oscillator. Such a system was used on the muon g-2 experiment;[8] it has many internal checks, and can be made highly reliable.

The accumulated data represent the number of events versus elapsed time; it is an exponential, modulated with the frequency we seek. Figure 2 shows a part of the data for one stopping substance.

The stopping material was liquid in a 3-inch cube made of 5-mil Mylar. The contained accounted for 1% of the total counting rate; the target-out rate was 2.5%. The decay-electron rate was 60/sec, with an asymmetry of 0.16 in water. The target-out asymmetry was 0.05. We measure, and correct for, the frequency of this signal. A large bending magnet with special pole tips and shimming coils[9] gave a field with weighted average of 0.3 ppm above the value at the center of the gap, and rms deviation of 2 ppm. The field was 11 kG, corresponding to about 149 MHz for muons and 46.8 MHz for protons.

Two separate proton magnetic resonance systems were used; one was part of the magnetic-field regulation and the other served to monitor the field during running (as shown in Fig. 1) and to map the field (four field maps were made). Proton resonance was observed in a small cylindrical sample of H_2O + 0.005 M $Fe(NO_3)_3$. Frequency at the monitor position was continuously recorded by a crystal-controlled counter. The field at the center of the gap (target out) was measured every few hours. A small bulk-susceptibility correction was

because the NMR sample and the stopping volume do not have the same shape.

The correct average over the magnetic-field map involved an auxiliary experiment. The stopping distribution and decay asymmetry were measured as functions of position in the stopping volume, and the final weight at each point was the product of asymmetry and counting rate.

We have made measurements in NaOH solution, distilled water, and methylene cyanide, $CH_2(CN)_2$. A maximum-likelihood fit was made to the data from each of the two timing systems, leaving frequency, phase asymmetry, and (uniform) background as free parameters.[10] The frequency was determined, in each case, to about 2 ppm statistical accuracy. The overall agreement between results from the two independent systems was 0.5 ppm. Starting or ending the analysis interval at different times had no significant effect. The corrections and systematic errors are summarized in Table I.

Results are in Table II. We see no significant difference between NaOH solution and distilled water. The effect suggested by Ruderman[6] requires the presence of the muon as a positive ion. However, OH^- is known to recombine with H^+ in water at an extremely rapid rate, and it can be shown[11] that the μ^+ ions would become neutralized, in 0.1 N NaOH solution, in $< 10^{-10}$ sec. The frequency in NaOH solution, expected according to Ruderman to be ~15 ppm lower than in H_2O, is in fact 1.6 ppm higher.

Several lines of evidence lead to the conclusion that μ^+, H^+, and T^+ (tritons) when slowing down in matter do not reach thermal energy as ions.[12] Below a few hundred eV a positive muon has with high probability permanently captured an electron. Losing energy by molecular collision, it becomes a "hot atom,"[13] which, at a few eV, may become part of a molecule, thus retaining its polarization, or may thermalize, probably depolarizing.

A proton in (liquid) H_2O experiences a magnetic field weakened, due to atomic electrons, by 25.6 ppm. When a muon replaces a proton, it should generally experience approximately the same shielding. Fortunately most neutral hydrogen-containing molecules have nearly the same shielding effect as water. We list in Table III the species expected on the basis of hot-atom work with tritium, also the shift (with respect to protons in water at room temperature) a proton experiences in each. There is a muon-proton difference because the muon, with zero-point energy three times as large, sits higher in its anharmonic potential well, and moves away from its neighbor. We estimate the effect to be about 0.2 ppm in ordinary molecules.[14] However, the muon in a μHO molecule takes part in hydrogen bonding to neighboring molecules, and the higher zero-point energy should lead to a larger hydrogen-bond effect. An estimated upper limit to the additional shielding decrease caused by the hydrogen-bonding effect in water is 4 ppm.[15] We assign 2 ppm for this shift, and an error of ± 2 ppm in the net H_2O shift. $CH_2(CN)_2$ does not have a comparable hydrogen-bond problem, but it has a large number of possible species; we assign ± 1.5 ppm error.

The results in Table II for water (combined NaOH and H_2O data) and for $CH_2(CN)_2$ are in gratifying agreement: 1.9 ppm difference, compared with individual errors of 2.8 ppm and 3.1 ppm. We take the average, and, since

systematic uncertainties contribute over half the error, we leave the error of the average as 2.8 ppm. The final result is thus μ_μ/μ_p = 3.183347(9) (2.8 ppm). The previously reported results were: Columbia,[1] 3.183380(40); Berkeley,[2] 3.183369(70); Princeton-Penn,[3] 3.183330(44).

We now put our results and the recent[16] value of α into the evaluation, by Taylor, Parker, and Langenberg,[17] of the muonium hyperfine splitting, ν_m. The predicted value proves to be 4463.289(19) MHz. This is very close to the weighted average of the two most recent results: Ehrlich et al.,[4] ν_m = 4463.317(21) MHz; Crane et al.,[5] ν_m = 4463.249(31) MHz. The old discrepancy between hydrogen hfs and muonium hfs, discussed by Ruderman[6] and others, was 40 ppm; it was based on the Columbia muon moment[1] and the 1964 high-field muonium.[18] Our result brings the muon moment down 10 ppm; the new muonium results account for the remaining 30 ppm; and the muonium hfs is now in satisfactory agreement with theory, using the Josephson-effect α. It is interesting that a more precise value for muonium hfs would lead to a value of α of accuracy comparable to that of the Josephson effect.

Finally, one obtains the muon-electron mass ratio from $g_\mu\mu_e/g_e\mu_\mu$. The result (we follow Taylor et al.[17]) is m_μ/m_e = 206.7683(6).

We thank Professor L. Slutsky for much helpful advice on chemical problems, and M. Delay and J. Justice for important contributions. We acknowledge the excellent cooperation of Jimmy Vale and the cyclotron crew, and the valuable contributions of many members of the LRL staff.

- - - - - - - - - - - - - -

*Work supported by the NSF and the U.S. Atomic Energy Commission.

1. D. P. Hutchinson, J. Menes, G. Shapiro, and A. M. Patlach, Phys. Rev. 131, 1351 (1963).

2. G. McD. Bingham, Nuovo Cimento 27, 1352 (1963).

3. D. P. Hutchinson, F. L. Larsen, N. C. Schoen, D. I. Sober, and A. S. Kanofsky, Phys. Rev. Letters 24, 1254 (1970).

4. R. D. Ehrlich, H. Hofer, A. Magnon, D. Stowell, R. A. Swanson, and V. L. Telegdi, Phys. Rev. Letters 24, 513 (1969).

5. P. Crane, J. J. Amato, V. W. Hughes, D. M. Lazarus, G. zu Putlitz, and P. A. Thompson, Bull. Am. Phys. Soc. 15, 45 (1970).

6. M. A. Ruderman, Phys. Rev. Letters 17, 794 (1966).

7. A Preliminary report has been given: J. F. Hague et al., Bull. Am. Phys. Soc. 15, 608 (1970).

8. J. Bailey, W. Bartl, G. von Bochman, R. C. A. Brown, F. J. M. Farley, H. Jostlein, E. Picasso, and R. W. Williams, Physics Letters 28B, 287 (1968).

9. This system was used by K. M. Crowe and G. McD. Bingham, Ref. 2. See G. McD. Bingham (Ph. D. Thesis), Lawrence Radiation Laboratory Report UCRL-10107, 1963 (unpublished).

10. Background was 1 to 1.5% of initial counting rate. Leaving the lifetime as an additional free parameter does not change other results, and gives a lifetime within ≈ 1 standard deviation of the world average. Our value will be discussed in a future publication.

11. We are grateful to Prof. L. Slutsky for elucidating the experimental evidence for this statement; the argument will be included in our detailed publication.

12. Muonium is known to be formed in Ar and Kr. Observation on proton beams shows that as the beam slows down to a few keV it is increasingly neutralized; in various substances the fraction is up to 0.85-0.90 at the lowest energies

observable, and still rising. See S. K. Allison and M. Garcia-Munoz, in Atomic and Molecular Processes, D. R. Bates, Ed. (Academic Press, New York, 1962); Ch. 19. The evidence from hot-atom chemistry is summarized by R. Wolfgang, Prog. Reaction Kinet. 3, 99 (1965).

13. See, e.g., R. Wolfgang, op. cit., and F. S. Rowland, J. Am. Chem. Soc. 90, 4767 (1968). We are indebted to Professor Rowland for helpful advice on hot-atom chemistry.

14. The first vibrational state of an OH system will have the same stretching as $O\mu$. From studies of H_2O spectra this is found to be ≈ 1%. Ruderman (Ref. 6) finds a rate of change of shielding with covalent bond distance which gives 0.2 ppm for 0.01 A. He also points out the importance of hydrogen bonding; our argument follows his, but with reference to neutral molecules rather than ions.

15. We are indebted to Prof. J. A. Pople for advice on this question.

16. T. F. Finnegan, A. Denenstein, and D. N. Langenberg, Phys. Rev. Letters 24, 738 (1970).

17. B. N. Taylor, W. H. Parker, and D. N. Langenberg, Rev. Mod. Phys. 41, 375 (1969).

18. W. E. Cleland, J. M. Bailey, M. Eckhause, V. W. Hughes, R. M. Mobley, R. Prepost, and J. E. Rothberg, Phys. Rev. Letters 13, 202 (1964).

Figure Captions

Fig. 1. Plan view (a) and elevation (b) of the apparatus. The 24-in. circle is a special pole-tip assembly fitting inside the 29×36-inch main gap of the magnet. Collimators, etc., have been omitted.

Fig. 2. Two short sections of the data for one target material (0.5 N NaOH), for which there were 3.4 million analyzed events. The smooth curve is the maximum-likelihood fit.

Table I. Corrections to ω_μ/ω_p, and systematic-error assignements.

Effect	Correction (ppm)	Error (ppm)
Proton resonance frequency at magnet center		0.9 (H_2O)
		1.3 ($CH_2(CN)_2$)
Weighted average over field map		1.0
Bulk susceptibility correction	+1.5	0.3
Target-out contribution	-0.4	0.4
Container-wall contribution		0.1
Frequency comparisons		0.02
Root-sum-square of systematic effects		1.4 (H_2O)
		1.7 ($CH_2(CN)_2$)

Table II. Results for ω_μ/ω_p, including corrections from Table I. The final ratios include the chemical corrections, and their errors, from Table III.

Water comparison:	H_2O	3.183350(8) (2.5 ppm)
	NaOH solution	3.183355(8) (2.5 ppm)
Final ratios:	H_2O and NaOH solution combined	3.183350(9) (2.8 ppm)
	$CH_2(CN)_2$	3.183344(10) (3.1 ppm)
Final result:	μ_μ/μ_p	3.183347(9) (2.8 ppm)

Table III. Muons in water and $CH_2(CN)_2$. Composition estimated from tritium hot-atom chemistry. δ is the increase in shielding, in ppm, relative to protons in water.

Species	Fraction	δ (proton)	δ (muon)
Water and NaOH solution			
μHO	0.9	0	-2.0
μH	0.1	0.4	0.2
μH_2O^+	≈0	-11	-15
Methylene cyanide			
μH	0.7	0.4	0.2
$\mu HC(CN)_2$	0.3	1.5	1.3
$\mu H_2C(CN)$	<0.1	3.0	2.8

Average shifts: Water, -1.8 ± 2.0 ppm; $CH_2(CN)_2$, +0.5 ± 1.5 ppm.

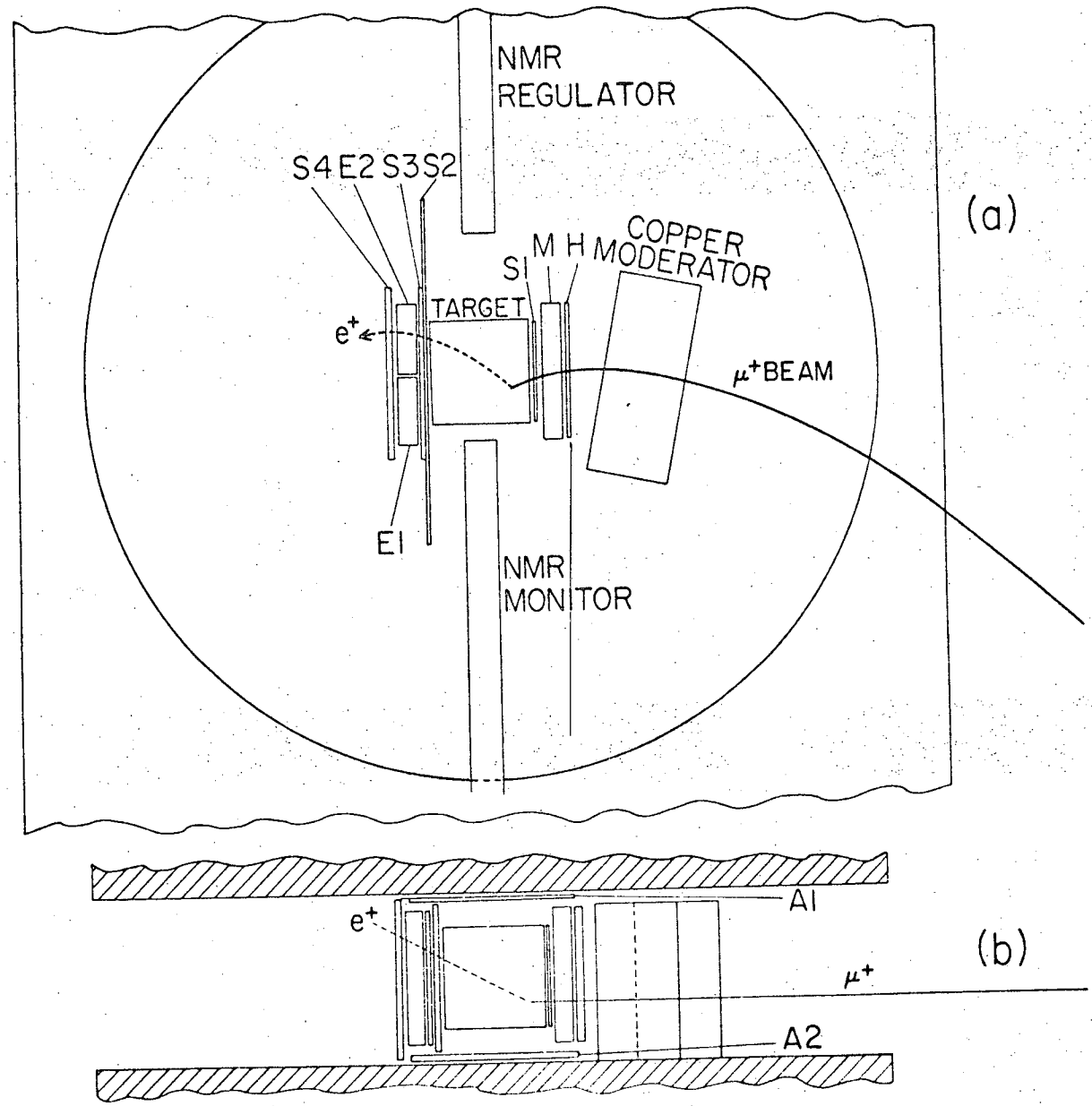
NMR
REGULATOR
S4 E2 S3 S2
(a)
COPPER
MODERATOR
M H
S1
TARGET
e+
μ+BEAM
E1
NMR
MONITOR
A1
e+
(b)
μ+
A2

Fig. 1

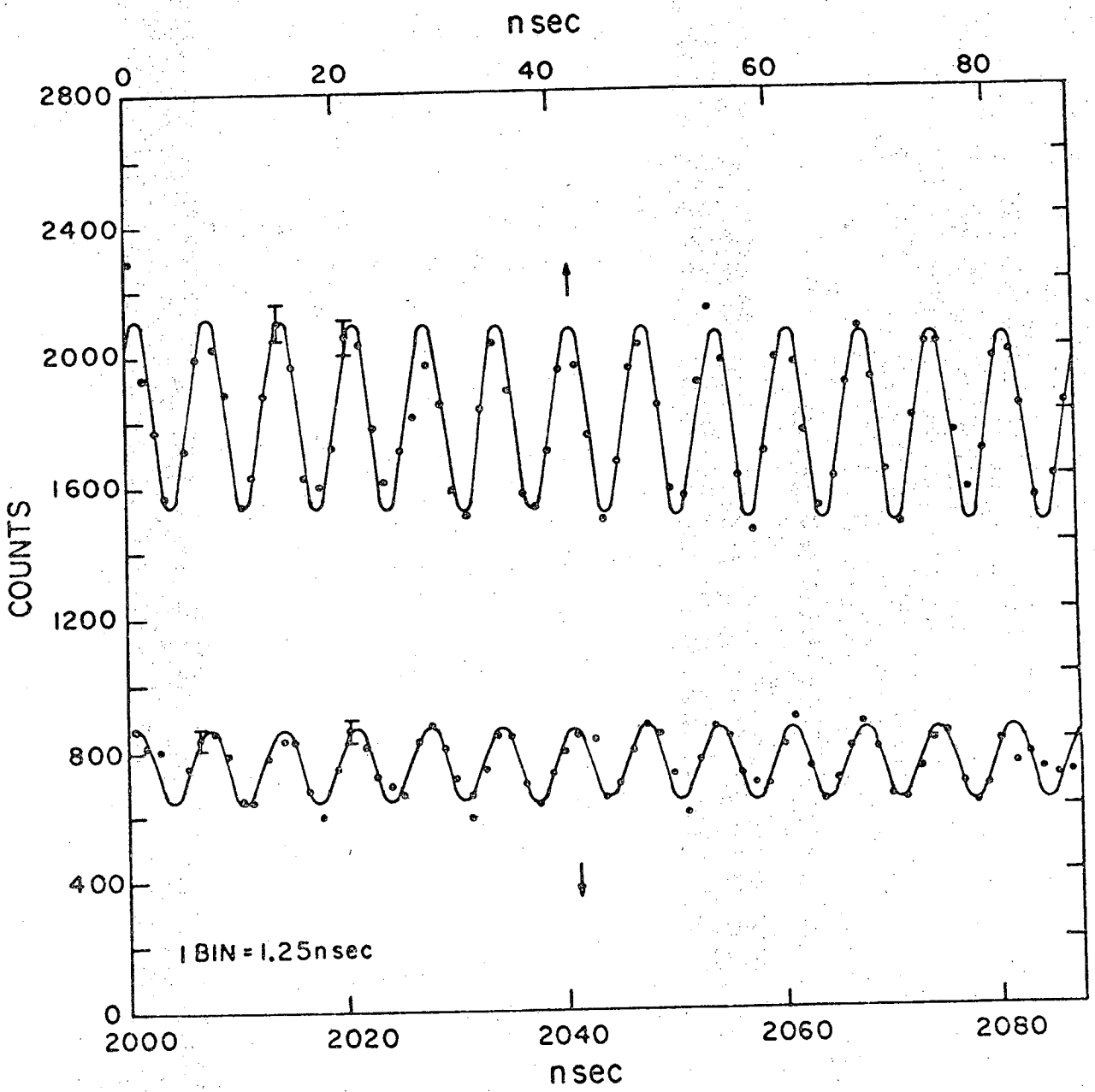
n sec
0
20
40
60
80
2800
2400
2000
1600
1200
800
400
0
COUNTS
1 BIN = 1.25 n sec
2000
2020
2040
2060
2080
n sec

Fig. 2

LEGAL NOTICE

This report was prepared as an account of Government sponsored work. Neither the United States, nor the Commission, nor any person acting on behalf of the Commission:

A. Makes any warranty or representation, expressed or implied, with respect to the accuracy, completeness, or usefulness of the information contained in this report, or that the use of any information, apparatus, method, or process disclosed in this report may not infringe privately owned rights; or

B. Assumes any liabilities with respect to the use of, or for damages resulting from the use of any information, apparatus, method, or process disclosed in this report.

As used in the above, "person acting on behalf of the Commission" includes any employee or contractor of the Commission, or employee of such contractor, to the extent that such employee or contractor of the Commission, or employee of such contractor prepares, disseminates, or provides access to, any information pursuant to his employment or contract with the Commission, or his employment with such contractor.

TECHNICAL INFORMATION DIVISION
LAWRENCE RADIATION LABORATORY
UNIVERSITY OF CALIFORNIA
BERKELEY, CALIFORNIA 94720