Submitted to Tetrahedron Letters

UCRL-19887
Preprint c.2

A WAVELENGTH DEPENDENT PHOTOLYSIS AND A LIGHT INDUCED THERMAL REDUCTION RESULTING IN DEOXYGENATION OF α, α, N-TRIPHENYLNITRONE

RECEIVED
LAWRENCE
RADIATION LABORATORY

SEP 2 1970

LIBRARY AND
DOCUMENTS SECTION

Janet S. Splitter and Melvin Calvin

July 7, 1970

AEC Contract No. W-7405-eng-48

TWO-WEEK LOAN COPY

This is a Library Circulating Copy
which may be borrowed for two weeks.
For a personal retention copy, call
Tech. Info. Division, Ext. 5545

UCRL-19887 c.2

LAWRENCE RADIATION LABORATORY
UNIVERSITY of CALIFORNIA BERKELEY

DISCLAIMER

This document was prepared as an account of work sponsored by the United States Government. While this document is believed to contain correct information, neither the United States Government nor any agency thereof, nor the Regents of the University of California, nor any of their employees, makes any warranty, express or implied, or assumes any legal responsibility for the accuracy, completeness, or usefulness of any information, apparatus, product, or process disclosed, or represents that its use would not infringe privately owned rights. Reference herein to any specific commercial product, process, or service by its trade name, trademark, manufacturer, or otherwise, does not necessarily constitute or imply its endorsement, recommendation, or favoring by the United States Government or any agency thereof, or the Regents of the University of California. The views and opinions of authors expressed herein do not necessarily state or reflect those of the United States Government or any agency thereof or the Regents of the University of California.

Tetrahedron Letters
1970

A WAVELENGTH DEPENDENT PHOTOLYSIS AND A LIGHT INDUCED THERMAL REDUCTION RESULTING IN DEOXYGENATION OF α,α,N-TRIPHENYLNITRONE

Janet S. Splitter and Melvin Calvin

Department of Chemistry and Laboratory of Chemical Biodynamics
University of California, Berkeley, California 94720

Irradiation of nitrones generally results in cyclization to oxaziridines.[1] However, we have found that triphenylnitrone (I) undergoes approximately 30% deoxygenation when irradiated at 2537 Å in ethanol in the absence of oxygen, whereas this nitrone forms an oxaziridine in almost quantitative yield when irradiated at 3500 Å with or without oxygen present.[2] Although this is one of the few reports of photodeoxygenation of a nitrone[3], heteroaromatic amine N-oxides have been shown to undergo deoxygenation in addition to other photoreactions.[1] In some cases, oxygen insertion into C-H bonds and addition to double bonds have been demonstrated.[4] Since oxaziridines have not been characterized in the heteroaromatic amine N-oxide series,[1] it is not known whether the oxygen is transferred from the N-oxide or an oxaziridine intermediate.

When 2, 3, 3-triphenyloxaziridine was irradiated at 2537 Å under the same conditions as I, very little deoxygenation occurred. The major reaction was fragmentation to benzophenone and phenylnitrene[5a] with the quantum efficiency of oxaziridine disappearance close to 1.[5b] Apparently, it is the nitrone and not the oxaziridine that undergoes the photodeoxygenation.

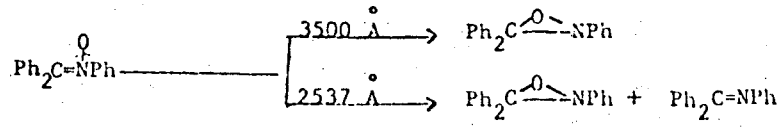

In order to obtain information about the nature of the excited state involved, the quantum efficiencies of the nitrone photoreaction under a variety of conditions were investigated. The results indicate that the photodeoxygenation occurs from a triplet state of the nitrone (Table I). There was appreciable quenching by oxygen, 2,4-hexadien-1-ol (E_T = 60[6]) and cyclohexene (E_T=80[7]). Stern-Volmer plots with the latter two quenchers leveled off at approximately 80% quenching, suggestive of some singlet state deoxygenation.[8] At low quencher concentrations, $K_q\tau$(slope)

Table I

Quantum Yields of Triphenylnitrone Disappearance and Triphenylimine and Triphenyloxaziridine Appearance Under Varying Conditions of Irradiation at 2537 Å [a]

Added Substance	Ø Nitrone Disappearance [b]	Ø Imine Appearance [c]	Ø Oxaziridine Appearance [d]
-	0.42	0.12	0.30
oxygen	0.36	0.06	0.30
cyclohexene, 360 mg.	0.37	0.07	0.30
2,4-hexadien-1-ol, 4.5 mg.	0.37	0.07	0.30
m-methoxyacetophenone, 400 mg. [e]	0.012	0.003	0.009
benzene, 14 ml. (ethanol, 1 ml.) [e]	0.091	0.033	0.058
acetophenone, 400 mg. [e]	0.079	0.069	0.010
benzophenone, 200 mg. [e]	0.099	0.089	0.010

a) Nitrone was 6×10^{-4} M in ethanol, total volume 15 ml.; under helium except where oxygen is noted. Irradiations were conducted at 2537 Å in a Rayonet RPR-208 photoreactor with KI_3 solution filter. Ferrioxalate actinometry was used. Irradiation times were 30 sec. in the first four experiments, 5 mins. in the fifth and 2 mins. in the last three experiments; conversions to 8-25%.
b) Remaining nitrone was determined spectrophotometrically at 3100-3400 Å on a diluted aliquot before and after irradiating at 3500 Å under oxygen. Maximum error ± 1%.
c) Imine was determined spectrophotometrically at 3400 Å and by glpc after irradiating remaining nitrone to oxaziridine at 3500 Å under oxygen. Maximum error ± 5%. Imine was stable to these conditions of irradiation. Photoreduction of nitrone by the benzophenone formed from oxaziridine fragmentation was found to be less than 3% of the total imine.
d) Oxaziridine was determined by glpc and active oxygen determination. There was no evidence of a product other than the thermal and photochemical products of oxaziridine. Maximum error + 5%. There was partial photolysis of the oxaziridine in the first four and the sixth experiments.
e) Added compound was calculated to absorb 99.5% of the light.

was 3 M^{-1} for cyclohexene and 250 M^{-1} for 2,4-hexadien-1-ol. Assuming that the latter quenching was diffusion controlled, the lifetime of the triplet state was calculated to be approximately 50 nanoseconds.[9]

Triplet sensitization of the photodeoxygenation reaction was inefficient with m-methoxyacetophenone (E_T=73 [10]) and benzene (E_T=84 [11]). However, the quantum yield of intersystem crossing for benzene is 0.45[12] compared to 1 for the ketones.[11] If there is singlet quenching of benzen

the efficiency can be as low as 0.2.[13] With $\phi_{isc} = 0.2$ as a correction factor, the quantum yield of imine formation from benzene triplet sensitization is similar to that from direct irradiation. In summary, the nitrone triplet state that results in deoxygenation appears to have a relatively high energy (∿75-80 kcal /mol) and short lifetime.

Oxaziridine formation has been shown to be a π,π^* singlet state reaction.[14,15] The energy of the lowest singlet state of I is estimated to be approximately 75 kcal/mol.[16] With a typical π,π^* singlet-triplet energy difference,[17] the lowest π,π^* triplet may be about 40-50 kcal/mol.[18] Sensitization of cis-trans isomerization of α-cyano,α, N-diphenylnitrone has been shown to occur with a triplet sensitizer of E_T=46 kcal/mol.[19] The π,π^* and n,π^* states of nitrones would be expected from molecular orbital theory to have similar energy levels.[20] Evidence so far indicates that the n,π^* singlet state of nitrones has an energy similar to or higher than the π,π^* singlet state.[21] Since n,π^* singlet-triplet energy differences are usually less than 10 kcal/mol[17] the lowest n,π^* triplet of I may reasonably be expected to be above 73 kcal/mol.

Although reactions from higher triplets are rare,[22] we tentatively suggest that the photodeoxygenation of I occurs predominantly from the n,π^* triplet with possibly some contribution from the n,π^* singlet.

Acetophenone and benzophenone can act as hydrogen atom transfer agents via the ketyl radical.[23] These ketones led to more deoxygenation than m-methoxyacetophenone which does not undergo hydrogen abstraction reactions.[24] Since benzophenone irradiated in alcoholic solvents has been shown to be a reducing agent,[25] benzophenone was irradiated under similar conditions as above, with the nitrone solution in a foil covered side arm and tube and not exposed to light during the irradiation. Immediately after irradiation, the two solutions were mixed without opening to air. A high yield of deoxygenation (70%) to imine occurred after standing in the dark for one day. N-(Diphenylmethyl)-N-phenylhydroxylamine[26] under similar conditions was partially reduced to the amine, indicating that the hydroxylamine was not an intermediate. This evidence indicates that there is another mechanism for nitrone deoxygenation, that of the reaction of ground state nitrone with an active hydrogen atom donor.[27]

There is analogy to ketone chemistry in that ground state benzophenone is considered to

react with the reactive intermediate (In) in the irradiated benzophenone solution to form two ketyl radicals which combine to form benzopinacol.[25b]

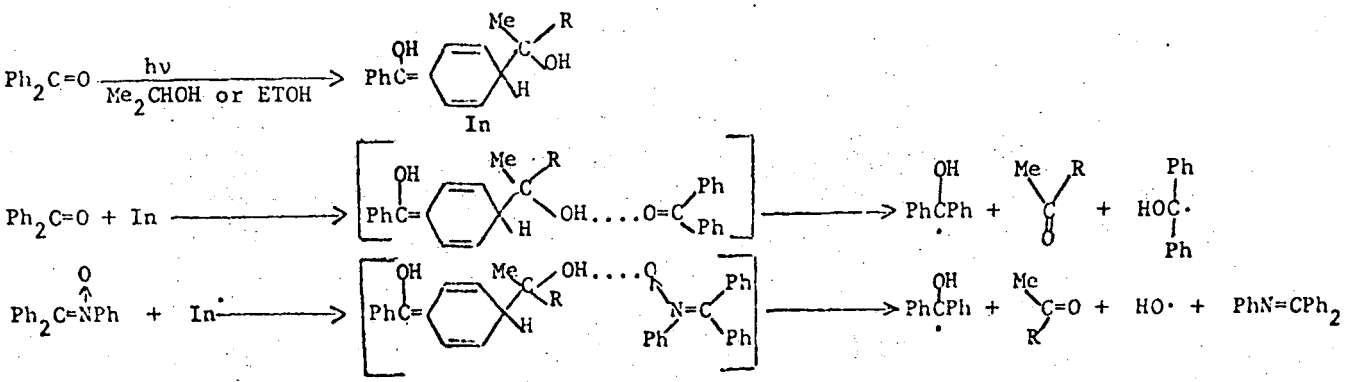

Full details of this study will be submitted for publication.

REFERENCES

1. G.G. Spence, E.C. Taylor and O. Buchardt, Chem. Rev., 70, 231 (1970).
2. H. Ono, Ph.D. Thesis, Univ. of Calif.,Berkeley, 1969. This oxaziridine was found to be relatively stable.
3. a) L. Alessandri, Atti Accad. Naz. Lincei, Rend., Classe Sci. Fis. Mat. Nat., II, 19, 122(1910) for N-phenyl-α-(β-styryl) nitrone. However, this nitrone was found to give a high yield of oxaziridine at 3500 Å, Ref. 2. b) H. Shindo and B. Umezawa, Chem. and Pharm. Bull. (Japan) 10, 492 (1962) for α, N-diphenylnitrone; no yield reported. In most solvents, this nitrone gives a high yield of oxaziridine. c) M. Colonna, Gazz. Chim. Ital., 91, 34 (1961); solvent, acetone.
4. a) J. Streith, B. Danner and C. Sigwalt, Chem. Commun., 979 (1967); b) A. Alkaitis and M. Calvin, Chem. Commun., 292 (1968); c) T. Tsuchiya, H. Arai and H. Igeta, Tetrahedron Lett., 2747 (1969); d) D.M. Jerina, D.R. Boyd and J.W. Daly, Tetrahedron Lett. 457 (1970); and references cited.
5. a) J.S. Splitter and M. Calvin, Tetrahedron Lett., 1445 (1968). b) J.S. Splitter, unpublished results.
6. R. Kellogg and W. Simpson, J. Amer. Chem. Soc. 87, 4230 (1965).
7. D.F. Evans, J. Chem. Soc. 1735 (1960) for ethylene.
8. T.R. Evans in "Technique of Organic Chemistry," A. Weissberger, Interscience, New York, Vol. 14, 1969, p. 333-339.
9. K_q for ethanol, 5×10^9 M^{-1} sec^{-1}; F. Wilkinson, Adv. Photochem. 3, 241 (1964).
10. N.C. Yang, et al., J. Amer. Chem. Soc. 89, 5466 (1967).
11. N. Turro, "Molecular Photochemistry," W.A. Benjamin, New York, 1965.
12. R. Cundall and P. Griffiths, Chem. Commun. 194 (1966).
13. G.S. Hammond in "Chemistry of Ionization and Excitation," G.R. Johnson and G. Scholes, London, Taylor and Francis, 1967, p. 35; the greater yield of oxaziridine from benzene than from m-methoxyacetophenone sensitization indicates some benzene singlet sensitization of the nitrone.

14. K. Shinzawa and I. Tanaka, J. Phys. Chem., 68, 1205 (1964).
15. L.S. Kaminsky and M. Lamchen, J. Chem. Soc., B, 1085 (1968).
16. R.P. Foss, unpublished results for α,N-diphenylnitrone.
17. J.G. Calvert and J.N. Pitts, Jr. "Photochemistry", John Wiley, New York, 1966.
18. Analogous to stilbene, E_T=50 kcal/mol; G.S. Hammond, et al., J. Amer. Chem. Soc. 86, 3197 (1964). Quinoline N-oxide was an efficient quencher for benzophenone photopinacolization in ethanol. Experimental difficulties were encountered with triphenylnitrone as quencher.
19. K. Kagano and I. Tanaka, J. Phys. Chem., 69, 2545 (1965). R.W. Chambers and D.R. Kearns, Photochem. Photobiol., 10, 215 (1969) for E_T of eosin.
20. A. Streitwieser, Jr., "Molecular Orbital Theory for Organic Chemists," Wiley, New York, 1961.
21. M. Yamakawa, T. Kubota, and H. Akazawa, Theor. Chim. Acta, 15, 244 (1969).
22. D. Schuster and D. Sussman, Tetrahedron Lett. 1657 (1970) and references cited therein.
23. A. Padwa, W. Bergmark and D. Pashayan, J. Amer. Chem. Soc. 91, 2653 (1969).
24. B.M. Monroe and S.A. Weiner, J. Amer. Chem. Soc. 91, 450 (1969).
25. a) G.O. Schenck, et al., Tetrahedron Lett., 193 (1967). b) N. Filipescu and F. Minn., J. Am. Chem. Soc. 90, 1544 (1968). c) H. Backstrom and R. Niklasson, Acta Chem. Scand., 22, 2589 (1968).
26. C.E. Griffin, N.F. Hepfinger and B.L. Shapiro, Tetrahedron, 21, 2735 (1965).
27. Nitrones have been used as radical trapping agents, M. Iwamura and N. Inamoto, Bull. Chem. Soc. Japan, 40, 703 (1967).

LEGAL NOTICE

This report was prepared as an account of Government sponsored work. Neither the United States, nor the Commission, nor any person acting on behalf of the Commission:

A. Makes any warranty or representation, expressed or implied, with respect to the accuracy, completeness, or usefulness of the information contained in this report, or that the use of any information, apparatus, method, or process disclosed in this report may not infringe privately owned rights; or

B. Assumes any liabilities with respect to the use of, or for damages resulting from the use of any information, apparatus, method, or process disclosed in this report.

As used in the above, "person acting on behalf of the Commission" includes any employee or contractor of the Commission, or employee of such contractor, to the extent that such employee or contractor of the Commission, or employee of such contractor prepares, disseminates, or provides access to, any information pursuant to his employment or contract with the Commission, or his employment with such contractor.

TECHNICAL INFORMATION DIVISION
LAWRENCE RADIATION LABORATORY
UNIVERSITY OF CALIFORNIA
BERKELEY, CALIFORNIA 94720