Submitted to Nuclear Physics

UCRL-19905
Preprint

c.2

RECEIVED
LAWRENCE
RADIATION LABORATORY
AUG 12 1970
LIBRARY AND
DOCUMENTS SECTION

SEARCH FOR NEW ISLANDS OF FISSION ISOMERISM

Sven Bjørnholm, Jørn Borggreen, and Earl K. Hyde

June 1970

AEC Contract No. W-7405-eng-48

TWO-WEEK LOAN COPY

This is a Library Circulating Copy which may be borrowed for two weeks. For a personal retention copy, call Tech. Info. Division, Ext. 5545

UCRL-19905

LAWRENCE RADIATION LABORATORY
UNIVERSITY of CALIFORNIA BERKELEY

DISCLAIMER

This document was prepared as an account of work sponsored by the United States Government. While this document is believed to contain correct information, neither the United States Government nor any agency thereof, nor the Regents of the University of California, nor any of their employees, makes any warranty, express or implied, or assumes any legal responsibility for the accuracy, completeness, or usefulness of any information, apparatus, product, or process disclosed, or represents that its use would not infringe privately owned rights. Reference herein to any specific commercial product, process, or service by its trade name, trademark, manufacturer, or otherwise, does not necessarily constitute or imply its endorsement, recommendation, or favoring by the United States Government or any agency thereof, or the Regents of the University of California. The views and opinions of authors expressed herein do not necessarily state or reflect those of the United States Government or any agency thereof or the Regents of the University of California.

SEARCH FOR NEW ISLANDS OF FISSION ISOMERISM*

Sven Bjørnholm†, Jørn Borggreen†, and Earl K. Hyde

Lawrence Radiation Laboratory
University of California
Berkeley, California 94720

June 1970

Abstract

The spontaneously-fissioning isomers of Am and neighboring elements have been explained as nuclei trapped in a secondary minimum in the fission barrier profile. Some recently published calculations suggest the possible existence of another group of such shape isomers near Z = 85, N = 118. An attempt was made to produce isomers of Po, At, Rn, and Fr by bombardment of ^{197}Au with beams of ^{11}B, ^{12}C, ^{14}N, ^{16}O from the Berkeley HILAC and to observe their fission mode with Si semiconductor detectors. The cross section limits were set at 70 nanobarns or less for the half-life range 2×10^{-9} to 2×10^{3} seconds. An attempt was also made to observe fission fragments from nuclei decaying in flight after recoiling out of targets of Ce, Pr, Tm, and Au bombarded with heavy ions. No fission fragments were observed from products in the half-life range 10^{-9} to 5×10^{-8} seconds above a cross section limit of $\sim$ 50 nanobarns. The possible existence of isomers decaying primarily by γ-transitions to the first minimum was not excluded in either set of measurements. The apparatus was tested with known isomers produced by the reactions ^{238}U(d,pn)^{238m}U (200 ns) and ^{248}U(^{12}C,α3n)^{243m}Cm (38 ns).

*Work performed under the auspices of the U. S. Atomic Energy Commission.

†Permanent Address: Niels Bohr Institute, Risø pr. Roskilde, Denmark.

1. Introduction

The discovery of a series of americium isomers decaying by spontaneous fission is by now a well known story[1]). The interest in these isomers has widened with the observation of many more examples[2-4]) among the isotopes of U, Pu, Cm, and Bk, which establishes the existence of an island of this new type of isomerism in the isotopic chart within the Z limits 92-97 and the N limits 141-149. The explanation of this phenomenon is based on theoretical calculations[5,6]) of the fission barrier profile by a model which adds to the average liquid-drop energy a correction due to the non-uniform single-particle level densities. According to these calculations the fission barrier for nuclei in the region where the isomers have been observed is double-humped, and the minimum between the humps is so deep that nuclei can be caught in the minimum. This explanation is gaining quantitative support from the detailed analysis of production cross sections, isomer half lives, etc. In most cases, decay by spontaneous fission seems to dominate and it is therefore inferred that penetration of the outer barrier, leading to fission, is favored relative to penetration of the inner barrier, which would lead to γ-decay.

The question arises whether other islands of fission isomerism exist. Theoretical calculations[7,8]) indicate that a secondary minimum in the fission barrier lying 4-6 MeV above the ground state minimum might also be expected in the region around Z = 85, N = 118. In this region the calculated barriers surrounding the second minimum favor the γ-decay mode, but the uncertainties of the calculations seem to justify a search for delayed fission decay, which can be measured with much greater sensitivity than decay by delayed γ-rays.

The purpose of the investigation reported in this paper was to determine the properties of fission isomers which might exist in this region. The study was stimulated by reports of the apparent observation[9,10]) of fission isomers produced with cross sections of the order of 10^{-29} cm^2 in the interaction of heavy-ion projectiles with targets of Ba, Ce, Tm, Au and other elements. The half lives were reported to lie in the nanosecond region. In these experiments tracks were observed in mica and plastic detectors when they were exposed in such a way that only particles originating from a volume downstream from the target could reach the detectors.

It seemed appropriate to study these isomers by a different detection technique which offered the possibility for a more detailed investigation of the fission characteristics. With this in mind we performed experiments with sets of Si-semiconductor detectors in a similar geometry and under an experimental configuration which would permit registration of high-energy heavily-ionizing particles in coincidence. The details of the technique and the results are given below, but we may summarize by the statement that in no case has it been possible to detect delayed fission, except for cases which fall in the previously well-established island at Z = 92-97. The cross section limits for all other trial cases were below 10^{-31} cm^2, and, for products in the range Z = 84-87, N = 116-122, the half life limits were 2×10^{-9} to $2 \times 10^{+3}$ seconds. This does not prove that there are no shape isomers in this region, as theoretically predicted, but it indicates that if they exist, the dominant decay mode is γ-emission.

2. Experimental Techniques

The experiments were performed at the Berkeley heavy ion linear accelerator, HILAC, with the target and detection system shown in fig. 1. The apparatus was designed so that prompt fission occurring in the target could not be registered by the detectors. On the other hand fission which occured in nuclei which were ejected from the target and traveled into the sensitive volume of the detection system could be detected with high efficiency. Experiments of two general types were performed. In the first series a recoil catcher foil was inserted between the detectors (fig. 1). It consisted of a 225 $\mu g/cm^2$ plastic foil (Makrofol) supported by four Be pins. Since the angular spread of the recoils is appreciably larger than the spread in the beam angle after traversal of the target, a central hole was left in the catcher foil to allow the beam to pass unobstructed. In this way possible background difficulties due to prompt fission induced by the beam in minute amounts of target material transferred to the catcher, were avoided. The use of the recoil collector allowed us to cover the half life range of 2×10^{-9} to 2×10^{3} seconds. In the second series of experiment no foil was used to stop the recoils and fission was observed only for those nuclei which decayed during flight through the detector system. The velocity of the recoils was of the order of 2 mm/ns which means that coincident fission fragments could be detected in the nanosecond time range.

The detector system consisted of four fan-shaped P-diffused Si wafers, cut from circular discs. The depletion layer was 50 μm thick, sufficient to stop 100 MeV fission fragments. The total sensitive area was 11.3 cm^2. Adjacent pairs of detectors were connected to two amplifier systems and the output signals from these were in turn fed to a time-to-amplitude converter, operated in the 150 ns time range. The prompt time resolution was $2\tau = 30$ ns. For each

recorded event information on the energy of the two fragments and the time between them was stored on magnetic tape. In some measurements the pulses from the two amplifiers were added and this sum plus the time between the two fragments were stored. After the experiment the data were sorted according to selection criteria on the energies or the time.

The sensitivity of the measurements was crucially dependent upon the elimination of background from beam scattering. For this purpose the beam was well collimated before it entered the target. The beam had a cross section of 4.0 × 4.0 mm while the target backing was supported by an Al target frame of 4.5 × 4.5 mm. The downstream aperture (fig. 1) had an opening of 6.0 × 6.0 mm and a length of 6 mm.

Projectiles scattered at an oblique angle into the detectors gave rise to a background of single counts with energies approaching the full beam energy. The singles count rate for this background was at times substantially higher than the count rate expected for true fission events but the coincidence requirement eliminated this background entirely when the vacuum was below 10^{-3} mm of Hg and the discriminator levels were set at 35 MeV. For the rare earth cases somewhat lower discriminator levels were used to ensure that no fission events were lost.

Another source of background was electrons knocked out of the target, but this was eliminated by applying a magnetic field of 3 kG in the space between the target and the detectors.

The maximum energy of the HILAC beam is 10.3 MeV/amu. Lower beam energies were obtained by inserting stacks of 1.7 mg/cm^2 Al foils in the beam. Northcliffe's range-energy calculations[11]) were used to determine the energy degradation in the foils.

Some targets were prepared by evaporation of the metal or oxide onto Al backings in thicknesses of 0.025 mg/cm^2 (^{238}U) or 0.5 to 1.0 mg/cm^2 (Ce and Pr). The Au, Tm, and Th targets were self-supporting rolled metal foils. The U target used for heavy ion bombardments (0.8 mg/cm^2) was prepared by painting an organic solution of uranyl nitrate on a Be backing.

3. Results

3.1. TEST OF SYSTEM WITH KNOWN ISOMERS.

The system was given a preliminary check and calibration with fragments from the spontaneous fission of ^{252}Cf, but it seemed desirable to test it under beam conditions with some known isomers. We worked with the catcher foil inserted and chose for this purpose 200 ns ^{238m}U and 38 ns ^{243m}Cm made by the reactions $^{238}U(d,pn)^{238m}U$ and $^{238}U(^{12}C,\alpha 3n)^{243m}Cm$, respectively[4,12,20]. We estimate from these half lives and from the recoil velocities that 70-80% of the isomers detected reached the collector foil before decay. Figure 2 shows the results of test runs.

It is a well-known property of fission that the total kinetic energy of the fragments varies as $Z^2/A^{1/3}$. Assuming that the distributions across the catcher foil of the recoil products in these two experiments were roughly similar we can conclude that the measured mean total kinetic energy of the fragments do reflect the difference in the value of $Z^2/A^{1/3}$. Although the widths of the energy distributions are large, it is readily possible to define a mean kinetic energy on the basis of 100 events clearly distinguishing Z = 92 from Z = 96 (fig. 2). From this observation, it is then possible to extrapolate to the positions roughly expected for fission of lighter (and heavier) elements, as indicated on the figure by black triangles.

The measurement of the ^{243m}Cm isomer also serves to calibrate the efficiency of the detector. Originally, this 38 ns activity was ascribed[12]) to ^{246m}Cf through the reaction $^{238}U(^{12}C,4n)^{246m}Cf$. Collimation of the recoils was used to discriminate against reactions with a wider angular distribution of recoils and under this condition the cross section was found[12]) to be

1.0×10^{-31} cm^2. Later, the 38 ns fission activity was reassigned[4,13] to ^{243}Cm made by the reaction ^{238}U(^{12}C,α3n)^{243}Cm, which has a wider recoil distribution. Taking that into account, the correct cross section is estimated to be $(4 \pm 1) \times 10^{-31}$ cm^2 and from this the detection efficiency for any spontaneously fissioning product, formed in a target thinner than the recoil range, is found to be (4 ± 1)%. Geometrical considerations indicate this to be a reasonable number.

3.2. SEARCH FOR ISOMERS WITH CATCHER FOILS IN PLACE.

The search for isomers in the island around Z = 85, N = 118 was made by irradiation of a 2.2 mg/cm^2 ^{197}Au target with ions of ^{11}B, ^{12}C, ^{14}N, and ^{16}O with energies from the Coulomb barrier to full energy (10.3 MeV/amu); the increments in bombarding energy (no. of steps) were chosen small enough to ensure that all isotopes between the lightest and the heaviest possible were produced. The thickness of the Au target was larger than the longest recoil range. In estimating the cross section limits, table 1, an effective target thickness equivalent to the range in the catcher was used, ref. [11]. The table also gives the estimated limit of the fission isomer ratio $R' = \sigma_{II}'/\sigma_I$ i.e., the ratio of isomer yield leading to spontaneous fission to that of the ground state. (The symbol σ_{II} is reserved as notation for the total isomer yield, irrespective of decay mode.) The ground state cross sections are taken from refs. [14,15,16] or crudely evaluated from consideration of the competition between fission and neutron evaporation, ref. [17].

3.3. SEARCH FOR ISOMERS - NO CATCHER FOIL.

A series of measurements was made under conditions closely similar to those of refs. [9,10] except that mica or plastic track detectors were replaced

by the semiconductor counters operated in coincidence, fig. 1. The recoil velocities varied from 0.16 to 0.30 cm/ns (except in deuteron and alpha particle bombardments). From this it was estimated by a folding procedure based on the decay-in-flight equation and the geometrically calculated detection efficiency that possible fission isomers with lifetimes between ≈ 1 and ≈ 50 ns are detected in coincidence with at least (2 ± 0.5)% efficiency. Single fission fragments have typically 20% probability of being detected, but the distinction of these from scattered beam particles was at times ambiguous.

The results which are presented in Table II give no positive indication of fission events in the new regions under investigation. An upper limit of a few nanobarns could be set in most cases for the formation of isomers decaying isotropically by delayed fission. A tendency for preferential forward-backward emission from aligned high-spin reaction recoils could increase that limit by a factor of at most five (see e.g. ref. [17]) p. 390 ff).

While this work was in preparation for publication we learned of new studies done by mica techniques by the authors of ref. [9]) in which new and lower limits were set on the occurence of spontaneously fissioning isomers[21,22]). These negative results also agree with those obtained in a concurrent study done by Flerov *et al.*[13]) with mica detectors. Altogether, there is presently no positive evidence for fission isomerism except for the U-Bk region.

4. Discussion

As a first and crude approximation it may be assumed that the relative probability R for the population of the two minima, i.e., the isomer and the ground state, in a compound reaction is a matter of the density of final states available in the two wells, evaluated at an energy somewhere between the neutron separation energy and the fission barrier, i.e., at 7-11 MeV above the ground state. The difference in level density primarily depends on the energy difference, $E_{II} - E_I$, between the two minima. Using Lang and LeCouteur's level density expression[19]) with the standard parameter a = A/11 one finds the following relation to be approximately valid

$$R = \sigma_{II}/\sigma_I \approx \rho_{II}/\rho_I \approx 10^{-(0.7 \pm 0.1)\,(E_{II} - E_I)} \quad .$$

This is equivalent to a constant temperature level density law with T = 0.6 ± 0.1 MeV.

A limit of 10^{-6} for R is equivalent to the statement that

$$E_{II} - E_I \gtrsim 8.5 \pm 1.0 \text{ MeV} \quad .$$

In fig. 3 the calculated values[6,7]) of $(E_{II} - E_I)$ are shown in the form of a contour plot. A large number of nuclides produced are calculated to have a second minimum 3-5 MeV below the estimated 8.5 ± 1.0 MeV, yet they have not been found in the present experiment.

Several factors – influence of shell effects on the level densities, a large difference in the height of the two barriers, or a large difference between the neutron separation energy and the barrier heights – can modify the first order estimate by one or two orders of magnitude. By far the most serious factor, however, is

the exponentially dependent competition between barrier penetration of the inner and the outer barrier, i.e., between γ-decay and spontaneous fission. The most straightforward conclusion is therefore that although there might well be an island of shape isomers around Z = 85, N = 118, the isomers do not decay by spontaneous fission.

Much larger values of $E_{II} - E_{I}$ are expected in the rare earth region, because here the liquid drop barrier is 20-40 MeV high, compared to $\approx$ 10 MeV for Z = 85. Even if there were shape isomers in this region which decayed by spontaneous fission with the right half life, one would expect the cross sections to lie well below the experimental limits in table 2.

ACKNOWLEDGMENTS

The authors wish to thank Frederick Goulding for advising us on the important choice of detector arrangement, Morris D. Roach for making and mounting the unusual detector, and Donald Landis and Alfred Wydler for help with the electronics. Charles Corum very competently designed the mechanical parts and Gordon Steers helped prepare targets. We are also indebted to the HILAC crew for their support in supplying the beam. Correspondence and discussions with Frank H. Ruddy, John M. Alexander, and J. Peter are gratefully appreciated.

References

1) S. M. Polikanov, Uspek. Fiz. Nauk 94 (1968) 43

2) N. L. Lark, G. Sletten, J. Pedersen, and S. Bjørnholm, Nucl. Phys. A139 (1969) 481

3) R. Vandenbosch and K. Wolf, Physics and Chemistry of Fission, IAEA, Vienna 1969 p. 439; V. Metag, R. Repnow, P. von Brentano, and J. D. Fox, ibid p. 449; see also the discussion p. 457

4) S. M. Polikanov and G. Sletten, Nucl. Phys., in press.

5) V. M. Strutinsky, Nucl. Phys. A95 (1967) 420, and ibid A122 (1968) 1

6) S. G. Nilsson, C. F. Tsang, A. Sobiczewski, Z. Szymański, S. Wycech, G. Gustafson, I. L. Lamm, D. Möller and B. Nilsson, Nucl. Phys. A131 (1969) 1

7) V. V. Pashkevich, Dubna preprint, JINR-R4-4383 (1969)

8) C. F. Tsang and S. G. Nilsson, Nucl. Phys. A140 (1970) 275

9) F. H. Ruddy and J. M. Alexander, Phys. Rev. 187 (1969) 1672

10) J. Peter, Phys. Letters 31B (1970) 124

11) L. C. Northcliffe and R. F. Schilling, Nuclear Data Tables A7 (1970) 233

12) J. P. Gangrsky, B. N. Markov, S. M. Polikanov, J. F. Harisov, and H. Jungclaussen, Izv. Akad. Nauk (Phys. Ser.) 32 (1968) 1644

13) G. N. Flerov, Yu. P. Gangrskii, B. N. Markov, N. C. Khanh, D. D. Pulatov and N. K. Shadieva, Dubna preprint, JINR-R7-5018 (1970)

14) T. D. Thomas, G. E. Gordon, R. M. Latimer, and G. T. Seaborg, Phys. Rev. 126 (1962) 1805

15) K. Valli, M. J. Nurmia, and E. K. Hyde, Phys. Rev. 159 (1967) 1013

16) K. Valli, E. K. Hyde, and W. Treytl, J. Inorg. Nucl. Chem. 29 (1967) 2503

17) E. K. Hyde, The Nuclear Properties of the Heavy Elements, Vol. 3 (Prentice Hall Inc., New Jersey, 1964)

18) G. N. Flerov, S. M. Polikanov, V. L. Mikheev, V. P. Perelygin, and A. A. Pleve, Proc. 3rd Conference on Reactions between Heavy Ions, ed. by A. Ghiorso, R. M. Diamond, and H. E. Conzett, University of California press, 1963, p. 219

19) J. M. B. Lang and K. J. LeCouteur, Proc. Phys. Soc. A67 (1954) 586

20) K. L. Wolf, R. Vandenbosch, P. A. Russo, M. K. Mehta, and C. R. Rudy, Phys. Rev. C1 (1970) 2096

21) F. H. Ruddy, M. N. Namboodiri, and J. M. Alexander, Preprint, State University of New York at Stony Brook, to be published, 1970.

22) J. M. Alexander and R. Bimbot, to be published, 1970.

Table I. Measurements With Catcher Foil

(2×10^{-9} s < $t_{1/2}$ < 2×10^{3}s)

Most Probable Product	Cross section, σ_{II}' 10^{-30} cm^2	Fission isomer ratio $\sigma_{II}'/\sigma_I = R'$	Reference
$^{197}Au + ^{11}B$, 50 - 114 MeV, 13 steps			
^{200}Po	< 0.02	$< 10^{-6.4}$	a)
^{201}Po	< 0.02	$< 10^{-6.7}$	
^{202}Po	< 0.02	$< 10^{-6.7}$	
^{203}Po	< 0.02	$< 10^{-7.0}$	
^{204}Po	< 0.02	$< 10^{-7.0}$	
$^{197}Au + ^{12}C$, 64 - 125 MeV, 17 steps			
^{201}At	< 0.05	$< 10^{-6.0}$	b)
^{202}At	< 0.05	$< 10^{-5.9}$	
^{203}At	≤ 0.04	$\leq 10^{-6.0}$	
^{204}At	< 0.05	$< 10^{-6.3}$	
^{205}At	< 0.05	$< 10^{-6.3}$	
$^{197}Au + ^{14}N$, 72 - 146 MeV, 14 steps			
^{202}Rn	< 0.06	$< 10^{-5.5}$	c)
^{203}Rn	< 0.06	$< 10^{-5.7}$	
^{204}Rn	< 0.06	$< 10^{-6.3}$	
^{205}Rn	< 0.06	$< 10^{-6.3}$	
^{206}Rn	< 0.06	$< 10^{-6.5}$	
^{207}Rn	< 0.06	$< 10^{-6.5}$	
$^{197}Au + ^{16}O$, 85 - 165 MeV, 18 steps			
^{204}Fr	< 0.07	$< 10^{-2.7}$	d)
^{205}Fr	< 0.07	$< 10^{-3.3}$	
^{206}Fr	< 0.07	$< 10^{-5.2}$	
^{207}Fr	< 0.07	$< 10^{-5.7}$	

(continued)

Table I. Continued

Most Probable Product	Cross section, σ_{II}' 10^{-30} cm^2	Fission isomer ratio $\sigma_{II}'/\sigma_I = R'$	Reference
^{208}Fr	< 0.07	$< 10^{-6.4}$	
^{209}Fr	< 0.07	$< 10^{-6.4}$	
^{210}Fr	< 0.07	$< 10^{-5.2}$	
^{238}U + ^{11}B, 59 and 63 MeV			
^{242}Am	0.05 ± 0.02	-	e)
^{243}Am	0.10 ± 0.03	-	
^{238}U + d, 20 MeV			
^{238}U	⩾ 1	-	f)
^{238}U + ^{12}C, 70 MeV			
^{243}Cm	(0.4) calibration	-	g)

a) Isomer ratio based on ref. 17

b) Isomer ratio based on ref. 14

c) Isomer ratio based on ref. 15

d) Isomer ratio based on ref. 16

e) The ^{242}Am cross section σ_{II}' is $(0.1 \pm 0.05) \times 10^{-30}$cm^2 according to ref. 18

f) The ^{238}U cross section σ_{II}' is $(10 \pm 2) \times 10^{-30}$cm^2 according to ref. 20. The lower yield observed in the present work is ascribed to poor target quality which prevents recoils from escaping in this particular low-momentum transfer process.

g) The ^{243}Cm cross section σ_{II}' is $(0.1 \pm 0.05) \times 10^{-30}$cm^2 according to refs. 12, 13 see text for discussion.

Table II: Measurements without Catcher Foil
(1×10^{-9}s $\leqslant t_{1/2} \leqslant 5 \times 10^{-8}$s.)

Target	Projectile	E_{min} MeV	E_{max} MeV	No. of Steps	Max. cross section this work $10^{-30}cm^2$	other $10^{-30}cm^2$	Reference
^{142}Ce	^{12}C	116	119	2	< 0.50		
^{nat}Ce	^{12}C	116	119	2	< 0.06		
^{nat}Ce	^{14}N	124	134	3	< 0.02		
^{nat}Ce	^{16}O	121	142	6	< 0.09		
^{141}Pr	^{11}B	89	95	3	< 0.09		
^{169}Tm	^{14}N	101	113	3	< 0.02		
^{197}Au	^{11}B	93	113	5	< 0.04		
^{197}Au	^{14}N	115	129	2	< 0.05		
^{197}Au	^{16}O	102	138	4	< 0.05		
^{232}Th	^{11}B	53	58	2	< 0.08	-	
^{232}Th	^{14}N	60	87	2	< 0.08	-	
^{232}Th	^{16}O	86	122	4	< 0.02	-	
^{238}U	^{4}He	28	-	1	$\geqslant 4$	40	3)[a])
^{238}U	^{12}C	70	73	2	0.50 ± 0.20	0.40 ± 0.10	12)[b])

a) The discrepancy between the $4 \times 10^{-30}cm^2$ measured for the 4ns ^{240m}Pu isomer in this work and the $40 \times 10^{-30}cm^2$ found in ref. [3]) is ascribed to poor target quality which in the present work prevents recoils from escaping in this particular low-momentum transfer process.

b) cf. footnote g of table 1 and text.

Figure Captions

Fig. 1. Detector-target arrangement. The catcher foil (hatched), shaped as a truncated pyramid, is shown in place. A recoil nucleus (R) is indicated flying out of the target, stopped in the catcher foil, and decaying into two fission fragments (f).

Fig. 2. Measurement of the total energy deposited in the two fission fragment counters (fig. 1) from spontaneous fission of two different isomers caught on the catcher foil. These experimental spectra differ from the true total energy distributions because of degradation in the catcher foil. The hatched columns indicate the values of the directly measured mean total kinetic energies, including statistical uncertainties.

Fig. 3. Isotope chart showing the island of nuclides produced in the experiment. The contour lines represent the energy difference in MeV between the isomeric and ground state minima, calculated by Pashkevich[7]) (dashed lines) and Tsang and Nilsson[8]) (full lines). The barriers surrounding the second minimum are always several MeV high (not shown, see refs. [7,8])).

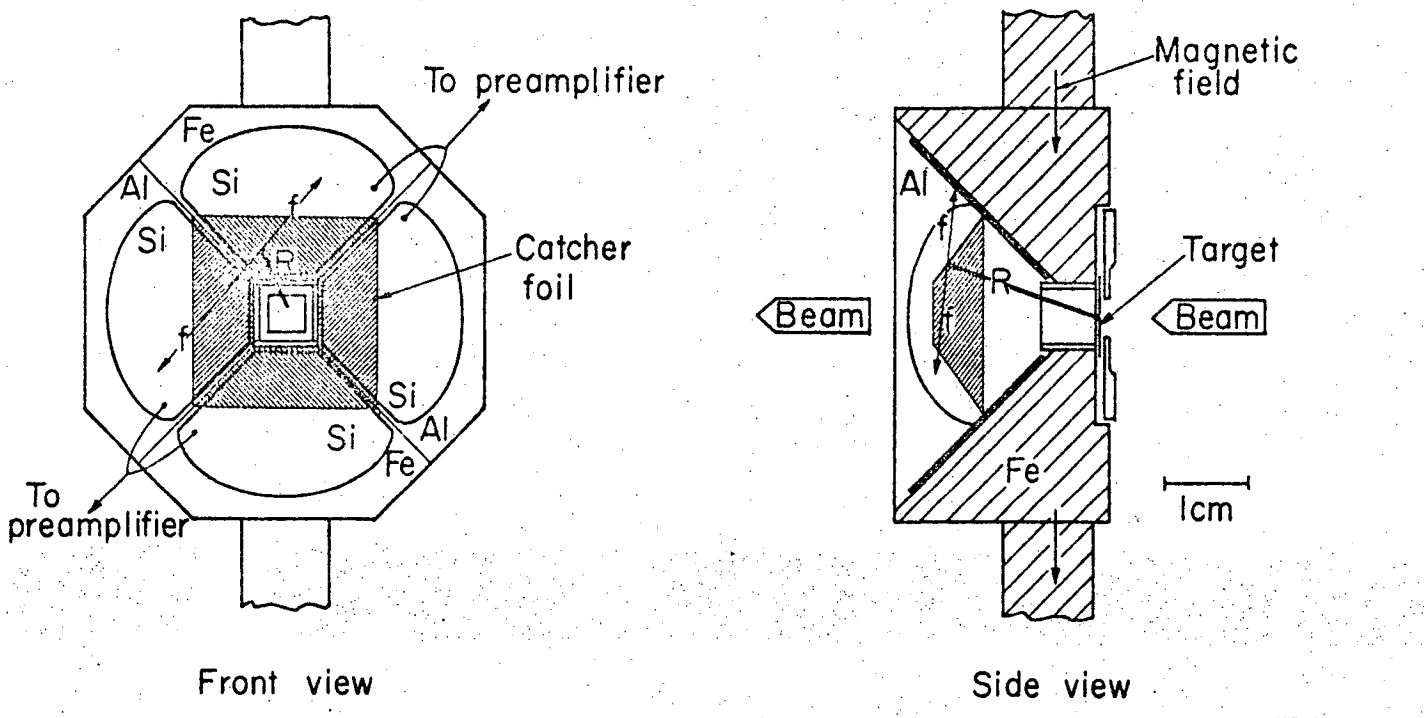
To preamplifier
Fe
Al
Si
Si
f
R
Catcher foil
f
Si
Al
Si
Fe
To preamplifier
Front view
Magnetic field
Al
f
R
Target
Beam
Beam
f
Fe
1cm
Side view
XBL706-3178

Fig. 1

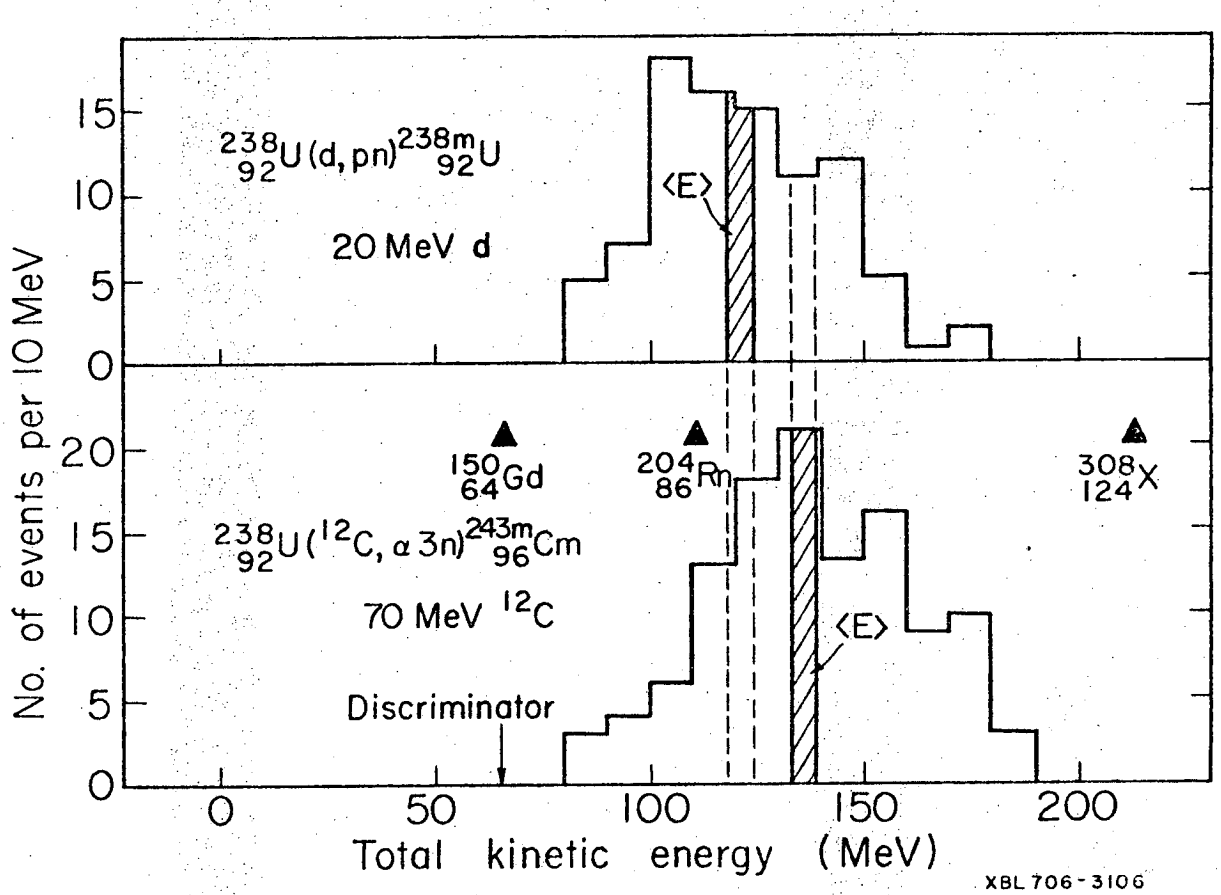
$^{238}_{92}U(d,pn)^{238m}_{92}U$
20 MeV d
⟨E⟩
$^{150}_{64}Gd$
$^{204}_{86}Rn$
$^{308}_{124}X$
$^{238}_{92}U(^{12}C,\alpha 3n)^{243m}_{96}Cm$
70 MeV ^{12}C
Discriminator
No. of events per 10 MeV
Total kinetic energy (MeV)
XBL 706-3106

Fig. 2

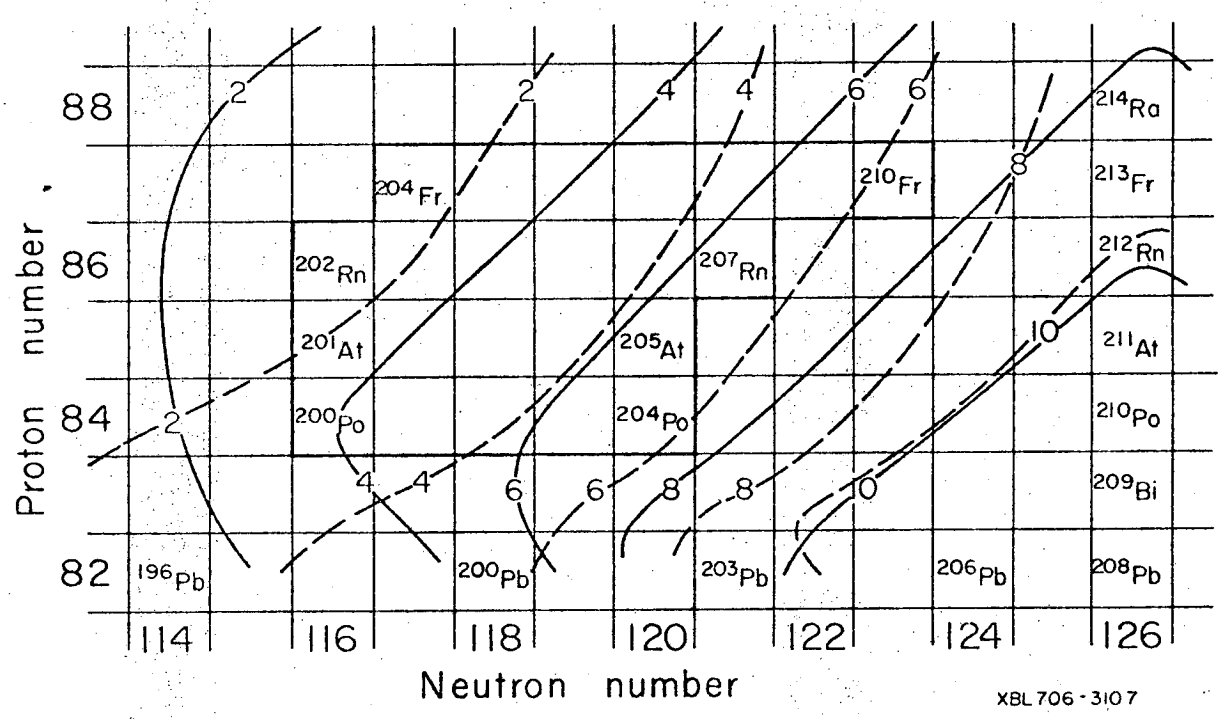
88
86
84
82
Proton number
114
116
118
120
122
124
126
Neutron number
196Pb
200Pb
203Pb
206Pb
208Pb
209Bi
210Po
211At
212Rn
213Fr
214Ra
200Po
201At
202Rn
204Fr
204Po
205At
207Rn
210Fr
2
4
6
8
10
XBL 706-3107

Fig. 3

LEGAL NOTICE

This report was prepared as an account of Government sponsored work. Neither the United States, nor the Commission, nor any person acting on behalf of the Commission:

A. Makes any warranty or representation, expressed or implied, with respect to the accuracy, completeness, or usefulness of the information contained in this report, or that the use of any information, apparatus, method, or process disclosed in this report may not infringe privately owned rights; or

B. Assumes any liabilities with respect to the use of, or for damages resulting from the use of any information, apparatus, method, or process disclosed in this report.

As used in the above, "person acting on behalf of the Commission" includes any employee or contractor of the Commission, or employee of such contractor, to the extent that such employee or contractor of the Commission, or employee of such contractor prepares, disseminates, or provides access to, any information pursuant to his employment or contract with the Commission, or his employment with such contractor.

TECHNICAL INFORMATION DIVISION
LAWRENCE RADIATION LABORATORY
UNIVERSITY OF CALIFORNIA
BERKELEY, CALIFORNIA 94720