Presented at the Proton Linear Accelerator
Conference, Batavia, Illinois,
Sept. 28 - Oct. 2, 1970

UCRL-19919
Preprint

c.2

MODIFICATION OF THE BERKELEY HILAC

Robert M. Main

September 1970

AEC Contract No. W-7405-eng-48

TWO-WEEK LOAN COPY

This is a Library Circulating Copy which may be borrowed for two weeks. For a personal retention copy, call Tech. Info. Division, Ext. 5545

LAWRENCE RADIATION LABORATORY
UNIVERSITY of CALIFORNIA BERKELEY

UCRL-19919 c.2

DISCLAIMER

This document was prepared as an account of work sponsored by the United States Government. While this document is believed to contain correct information, neither the United States Government nor any agency thereof, nor the Regents of the University of California, nor any of their employees, makes any warranty, express or implied, or assumes any legal responsibility for the accuracy, completeness, or usefulness of any information, apparatus, product, or process disclosed, or represents that its use would not infringe privately owned rights. Reference herein to any specific commercial product, process, or service by its trade name, trademark, manufacturer, or otherwise, does not necessarily constitute or imply its endorsement, recommendation, or favoring by the United States Government or any agency thereof, or the Regents of the University of California. The views and opinions of authors expressed herein do not necessarily state or reflect those of the United States Government or any agency thereof or the Regents of the University of California.

MODIFICATION OF THE BERKELEY HILAC*

Robert M. Main
Lawrence Radiation Laboratory
University of California
Berkeley, California 94720

ABSTRACT

A program is presently in progress for the modification of the Hilac to make possible the acceleration of ions of all masses to a maximum energy of 8.5 MeV/N. Present scheduling calls for the shut down of the existing Hilac in January 1971 and first beams from the modified system in August 1971.

The improved accelerator will consist of a pressurized 2.5 MV Cockcroft-Walton injecting ions of minimum charge-to-mass ratio $\epsilon = 0.045$, at 0.112 MeV/N into an Alvarez linac. The linac will be separated at 1.2 MeV/N where particles will be stripped to a minimum $\epsilon = 0.16$. The second linac section will be partitioned into individual cavities of approximately equal velocity increments. Adjustment of rf phase and gradient in these cavities will provide variable energy from 2.6 to 8.5 MeV/N. All cavities will operate at 70.2 MHz and magnetic quadrupole focusing will be used throughout.

Introduction

The beam requirements for the modified Hilac are that it accelerate ions of all masses 1 through 238, with intensities of 10^{10} to 10^{15}/sec, to an energy which must be variable through the range 2.5 to 8.5 MeV/amu. Since a good many counter experiments are anticipated, the duty factor must be high for all ions. For the types of experiments proposed, good beam quality (energy resolution) was considered of secondary importance, and could be sacrificed in the achievements of variable energy.

Since the proposed accelerator is designed as a minimum cost modification of the existing Hilac, the general design parameters of the improved system are predetermined by the design of the existing system. The improved accelerator must fit within the existing building, and must include as many of the Hilac components as is possible. Further restrictions in design arise through the necessity of carrying out the modification with a minimum disruption of the present operating schedule. With the imposition of these restrictions very little freedom in the establishment of system parameters remains.

The major investment in the existing accelerator is in the primary power supply, the rf amplifiers and their drive and control circuitry, and in the injector ion source system. The improved accelerator is designed to use this equipment, and its use restricts the structure of the principal ($\beta > 0.015$) accelerator to an Alvarez linac, and its frequency to 70 MHz.

The use of stripping at intermediate energies results in significant beam loss (only a fraction of the particles incident on the stripper appear in a single charge-state) and in the degradation of transverse beam quality due to scattering. Stripping

of the heavier ions, however, generally results in an increase in the charge-to-mass ratio, ϵ, by a factor of about 3, and a decrease in the required length of the cavity beyond the stripper by the same factor. Economics, therefore, dictate that the deleterious effects of stripping be tolerated.

The mean-stripped charge state of an ion increases as the velocity is increased. For a system using stripping, the cost of the prestripper accelerator increases with stripping velocity, but the cost of the poststripper accelerator decreases. The cost of the linac depends on its length (vacuum cavity, rf power, building costs, etc.) and on the number of cells required (drift tubes and quadrupoles). For a given initial and final energy, and with a knowledge of the dependence of the mean-stripped charge-to-mass ratio on velocity, the cost of the linac can be minimized. For the parameters of the SuperHilac, however, the system costs are relatively insensitive to the stripping velocity in the range $\beta \cong 0.05$ ($T_s = 1$ MeV/amu). A fairly wide latitude in the choice of stripping velocity is allowable and, in the case of the SuperHilac, we have made the choice on the basis of the position of the stripping area within the building.

Also, within reasonable operating limits, the cost of the system is relatively insensitive to the electric gradient chosen: An increase in the electric gradient allows a decrease in the number of drift tubes and the length of the cavities, but results in an increase in rf power and the number of amplifiers, and in x-ray shielding requirements. The gradients chosen for the SuperHilac are based on experience with the Hilac (reliable operation with regard to sparking) and the necessity to match the rf amplifiers (with regard to peak and average power) to the various cavities within this system.

The ratio of gap-to-cell length increases linearly from the entrance of the linac, with the sparking problem primarily in the shorter gaps. With the frequency predetermined, and the acceptable range of gap-to-cell length ($0.26 \leq G/L \leq 0.31$), only one parameter of the prestripper cavity system remains to be chosen. On the basis of problems of the mechanical design of the drift tube quadrupoles, we have chosen the drift tube diameter to be 25 cm and, for economy in design and fabrication, have maintained this diameter throughout the prestripper cavity. This choice, and the minimum acceptable G/L at the entrance of the cavity, results in a cavity diameter of 314 cm.

This cavity diameter is maintained throughout the entire linac by reducing the drift tube diameters in the poststripper portions of the system. Although for these cavities this design does not result in optimum shunt impedance, all of the cavity supports, drift tube hangers, stems, amplifier coupling loops and lines, shielding, etc., are identical along the entire length of the accelerator, again resulting in a significant saving in the design and fabrication effort.

Stripping

As indicated above, the major decision in the design of the SuperHilac--the type of structure to be used as the principal accelerator ($\beta > 0.015$), the resonant frequency of the structure, and the use of intermediate stripping--is predetermined by

the design of the existing Hilac. It should be noted that all of the design parameters indicated above for the modified system have been chosen without reference to either the entrance or stripped charge-to-mass ratio of the particle to be accelerated; establishment of these parameters affects only injection potential and the lengths of the two rf accelerators.

For the Alvarez linac accelerating heavy ions

$$T_o = \epsilon_i V_o e \tag{1}$$

$$T_s = T_o + \epsilon_i e \sum E_n L_n \cos\phi_s F \tag{2}$$

$$T_F = T_s + \epsilon_s e \sum E_n L_n \cos\phi_s F \tag{3}$$

where T_o, T_s, T_F are the injection, stripping and final energies of the particles; ϵ_i and ϵ_s are the initial and stripped charge-to-mass ratios of the particles; V_o is the injection potential; E_n and L_n are the electric gradient and cell length at the nth cell; and ϕ_s, F are the synchronous phase angle and transit function.

As indicated above, the choice of the exact velocity at which stripping of the particles is accomplished is not of major importance. However, having chosen the stripping velocity, the estimate of $\bar{\epsilon}_s$, the mean charge-to-mass ratio which can be achieved by stripping is vital to the design of the poststripper section of the system. The velocity gain per cell must be exact; the product ϵE must be constant for all ϵ. The maximum operable electric gradient is chosen on the basis of sparking problems and on peak power available from the amplifier system. If the anticipated stripped charge-to-mass ratio is not achieved, particles cannot be accelerated; if the stripped charge-to-mass ratio greatly exceeds that anticipated, the system is overdesigned and, by definition, too costly.

For the heavy ions at 1 MeV/amu, the fraction of total charge removed from the ion by stripping $\bar{q}/Z(\bar{\epsilon}_s = \bar{q}/Z \times Z/A)$ is approximately proportional to $Z^{-2/3}$. The heaviest ion produces the lowest $\bar{\epsilon}_s$, and the accelerator must be designed for this ion. All other ions can be accelerated by reducing the electric gradient and quadrupole magnetic gradients, keeping the products ϵE and $\epsilon B'$ constant. For the lighter ions, therefore, the system is overdesigned, and operates with minimum stress. Since the amplifiers are limited in average power to about 1/3 their peak power, a reduction in peak power requirements can be utilized in an increase in the duty factor of the system.

The SuperHilac is to accelerate uranium, and the poststripper section must be designed to accept the mean-stripped charge state of this ion at approximately 1 MeV/amu. Considerable data exists for the stripping of the lighter ions ($Z \leq 54$) at the velocities indicated; for the heavier ions, however, the accelerator must operate before detailed stripping measurements can be made. The SuperHilac poststripper must, therefore, be designed on the basis of a tenuous extrapolation of the existing data.

There is a considerable disparity in the mean charge state achievable for heavy ions stripped with dense or diffuse media, with the foil stripper in some cases producing mean charge ratios 20 to 25% higher than the gas stripper. On the other hand, foil strippers (10-15μ/cm^2) are extremely fragile and, for the heavy ions with high dT/dx, will have a limited life with moderate beam intensities. The use of the gas stripper, which has no limitation on beam intensity, is therefore preferable. In establishing the minimum charge-to-mass ratio acceptable in the SuperHilac post-stripper system, we have assumed the use of foil stripper for the heaviest ions (where the intensities are expected to be least). In the face of the uncertainty concerning achievable stripped state, we have chosen to be conservative in estimating $\bar{\epsilon}_s$ for uranium on carbon foil at 1.2 MeV/amu, $\bar{q}$ = 39 ($\bar{\epsilon}_s$ = 0.165). For the lighter ions ($M \leq$ 160-170) gas strippers can be used, with no limitation on intensity. If our estimates have been too conservative, it will be possible to strip heavier ions using gas.

Ion Source

Although there have recently been several proposals for the development of ion sources to produce acceptable intensities of ultraheavy ions with extremely high charge states, none of these have yet resulted in operating sources. A survey of the heavy ion sources now in use indicated that, when problems of lifetime and power consumption were considered, performance of the Hilac source compares favorably with any other type of source. Since our experience with this device is extensive, we have included it as a part of the SuperHilac.

This source is a 5 cm long x 0.6 cm diam PIG discharge, operating in a magnetic field of about 4500 gauss, which also serves as a charge-state analyzer. The beam is extracted, transverse to the magnetic field, with 18-25 kV from a 0.125 cm x 2.0 cm long slit. The source can be operated either with a cold cathode, with electrons produced by secondary emission, or a plasma-heated, thermally emitting cathode. The cold cathode operates at higher arc voltages and is used to enhance the production of higher charge states; whereas the hot cathode is used to produce intense beams of low charge-state ions. Single charge beams in excess of 10^{15} ions/sec have been produced with this source, for heavy ions (to mass 130) with ϵ = 0.05.

A variation of the heavy ion source has been developed in which a support gas is used to sputter metal from the surface of the anode into the plasma. This source produces moderate (10^{13}) beams of heavy-metal ions in the lower charge state with ϵ = 0.05.[1]

Although only preliminary work has been carried out with the ultraheavy ions, investigations with ^{200}Hg indicate that acceptable beams of > 10^{14}/sec of +9's (ϵ = 0.045) can be produced with the cold cathode source. Comparable beams of ^{238}U + 10's are expected using UF_6 and, since this charge-to-mass ratio is consistent with the sputter ion source output, we have chosen this as the minimum value for the SuperHilac prestripper.

The emittance of the Hilac source at an extraction potential of 25 kV is approx-

imately 22π cm-mr in both planes with ions with ϵ approximately equal to 0.045 and, for this charge-to-mass ratio, does not appear to be dependent on the mass of the ion. The acceptance of this beam in an Alvarez structure, at the specified electric gradient and for a synchronous phase angle of 20°, requires integrated magnetic quadrupole fields of 39 kG for the NNSS configuration and 60 kG for the NSNS configuration. The Alvarez linac injection energy was chosen as that for which (at an rf frequency of 70 kHz) magnetic fields of these magnitudes be produced with the Hilac drift tube quadrupole design, viz., 0.1125 MeV/amu. This injection energy specifies the maximum injector potential from Eq. (1) above $V_o = T_i/\epsilon_i = 2.5$ MV.

For these parameters and with an entrance aperture of 1.2 cm, the calculated admittance of the prestripper cavity is 6π and 7π cm-mr in the two transverse planes; whereas, the admittance of the injector (assuming no degradation in quality during preacceleration and transport) is estimated at 2.2π cm-mr.

Variable Energy

Partial energy beams are produced by the Hilac by reducing the electric gradient linearity along the cavity so that, at some point in the accelerator, the synchronous phase angle is reduced to zero. Particles are accelerated to this point, and subsequently, drift through the remaining cells with a zero net energy gain. Particles generally drop out of phase in three or four adjacent gaps and the exiting beam consists of several corresponding discrete energies. By judicious tuning of injection phase, quadrupole gradients and electric gradient, up to 30% of the injected beam can be produced at a single energy. For these beams, the energy resolution is reduced and the rf microstructure attenuated. The tuning is tedious and time consuming. Other proposed methods for producing partial energy beams from linacs are the introduction of a movable diaphragm in the cavity(exciting only the portion of the cavity before the diaphragm), and the use of individual and independently excited cavities, as in the Unilac.[2]

The scheme adopted for the SuperHilac is the division of the poststripper ($T > 2.5$ MeV/amu) into short, individually excited cavities each with 8-13 cells. The designed incremental velocity gain in these cavities is approximately constant at $\Delta\beta/\beta = 15\%$. An investigation of the effects of operating these cavities with electric gradient lower than the designed gradient, indicates that a completely variable energy gain from zero to the designed gain can be achieved. For this operation, both the rf phasing and amplitude of the partial energy cavities must be fully variable.

The energy resolution of the beams produced in this manner deteriorates depending on the length of the cavities. For the SuperHilac, these lengths have been chosen to give a reasonable match to the power capability of the rf amplifiers.

A discussion of the dynamics of the particles in these cavities is reported elsewhere.[3]

Time-Share Capability

The design of the rf control system to operate these cavities also makes possible the acceleration of particles of different charge-to-mass ratio to different

energies on alternate pulses.

An investigation with the PARMELA computer program indicates that particles with $0.045 < \epsilon < 0.15$ can be accelerated in the prestripper without adjustment of the drift tube quadrupole gradients. The betatron frequencies and amplitudes are, of course, different for the different particles, but the acceptance of the cavity is essentially unchanged.

The development of this time-share feature for the SuperHilac requires only a sophisticated control of the rf system with which the phase and amplitude of the individual cavities can be adjusted on a pulse-to-pulse basis. Also required are fast ($\simeq$ 5 ms) switching magnets to direct beams from the two injectors to the prestripper, and to separate the beams at the exit of the accelerator. This equipment will not be provided in the initial modification, but the system has been designed to make possible its inclusion at a later date.

With this capability, it will be possible to use a small fraction of the acceleration duty factor (e.g., 10%) to carry on the complete tuning, transport, experimental equipment setup and calibration, with one particle, simultaneous with the operation of the accelerator to conduct experiments with a different particle. Since these former activities normally consume at least 50% of the total accelerator operating time, a greatly increased accelerator utility will result.

Alvarez Cavities

The entire Alvarez linac section of the Hilac will be replaced with a new structure. The 3.15 meter diam vacuum tank wall will be copperclad steel, as for the original tank, and will consist of a 18.5 meter-long prestripper and a 30.9 meter-long poststripper separated by a 3 meter stripper drift section. The tank end walls will be 15 cm-thick steel, providing not only a rigid vacuum wall, but also x-ray shielding for the ends of the cavities.

X-ray shielding will enclose the cavity along its entire length. This will consist of a steel plate wall, 8 cm thick, between the accelerator and unoccupied areas outside the building, 17 cm-thick between the linac and occupied areas of the building, and a 5 cm-thick roof. The thick wall will be perforated only where necessary for amplifier coupling lines. Neutron shielding will probably be necessary at the high-energy end of the poststripper cavity, but this will be provided when and where operating conditions prove it necessary.

Since limited space is available for the assembly of the system, the cavity is being constructed in 6 meter-long sections, each with individual support systems. They will be moved, one-by-one, into the building, aligned, and welded together. The heavy end walls, also provided with individual supports, will then be welded to the ends.

For these cavities, the drift tube diameter to cavity diameter ratio is extremely small ($0.055 \leq d/D \leq 0.081$), so that the resonant properties are dominated by the cavity diameter. This feature, combined with the relatively short cavities used to provide variable energy, results in a pronounced relaxation in the fabrication and positioning tolerances of the drift tubes.

A method has been developed for the statistical analysis of the effects on the rf frequency and electric gradient distribution within the cavities, due to random fabrication and positioning errors of the drift tubes.[4] The detailed knowledge of the effects of these errors has allowed the relaxation of fabrication tolerance at various positions within the system to that actually required for the desired field uniformity. To further reduce these tolerances, we have adopted the following fabrication procedures. With the preliminary cavity parameters established, the vacuum tank walls were fabricated to relatively loose tolerances. Using measurements of the actual diameters along the tank, and taking into account known anomalies to be included within the system, the drift tube schedule necessary to produce uniform electric gradients will be developed. The drift tubes will then be fabricated to the specified lengths, again with nominal tolerances. After measurement of the actual drift tubes, the entire system will be recalculated and the proper length of the cavities and positioning of the drift tubes will be established.

This method of successive accommodation of fabrication error has allowed us to relax tolerances in several critical areas and has resulted in the reduction of component costs significantly.

The rf cavity walls, which have a maximum thermal load of about 0.3 watts/cm^2, will be watercooled, using extruded aluminum tubing running circumferentially around the tank and thermally bonded to the outside of the tank wall with conductive grease. The method of installation of this tubing[5] consists of circulating steam through the loosely positioned tubing hoop. The ends of the expanded hoop are then cinched together and, on contraction, the tube is uniformly compressed against the tank. Thermal drop across the resulting bond between tank and tubing is on the order of 0.5°C/watt/cm^2.

With the designed spacing of the cooling tubes, the mean temperature rise of the cavity under full rf load is calculated to be approximately 15°C, resulting in a frequency shift of about 10 kHz ($\delta f/f = 1.5 \times 10^{-4}$). Since the cavities will be operated at various relative rf loading levels, this entire frequency excursion must be compensated for by trim tuners within each cavity. These will consist of simple watercooled, rotatable hoops, approximately 0.5 meter in diameter, located on the cavity wall. Each of these tuners will provide ± 8 kHz tuning for a 3 meter long section of cavity.

After assembly of the entire Alvarez linac, and the introduction of amplifier coupling loops, tuning loops, etc., the various sections will be tuned to a single (cold) frequency by adjusting the end cell gap lengths and the size of the cryopump shroud. Subsequent to this tuning, frequency shifts should be due to thermal effects only and will be accommodated by the tuning hoops.

Drift Tubes

The use of magnetic quadrupole focusing in the low velocity end of the Alvarez cavities is a somewhat more complicated problem than in proton accelerators because

the drift tubes must be supported on a thin, 3.5 cm diam, 1.7 meter long stem. In addition to the necessity for stability of the axial alignment of the drift tubes, longitudinal magnetic forces must be accommodated. The problem of support in the radial directions is easily solved by using a two stem support system.

To achieve the high magnetic gradients necessary at the entrance of the linac, special coil winding techniques have been developed to allow the length of the pole tip to be maximized and still achieve the required excitation with nominal power. The use of the NNSS quadrupole configuration, with its unbalanced magnetic forces, requires magnetic shielding between the quadrupoles. In our original design this was provided with a magnetic stainless steel drift tube face. The use of this shielding, however, provides additional flux paths from pole to pole, resulting in saturation of the poles at lower pole-tip fields, and also a decrease in the effective length of the quadrupole.

In the optimization of the quadrupole parameters (pole width, coil positioning, shielding configuration, etc.) it was determined that for the shorter quadrupoles, the addition of shielding resulted in a decrease in maximum achievable integrated quadrupole fields by approximately 45%. With the shield removed the magnets are capable of achieving fields adequate for operation of the prestripper portion of the accelerator in the NSNS configuration. The use of this quadrupole configuration results in an increased transverse admittance for the system by about 40%, and reduces the magnetic alignment requirement significantly.

For this magnetically balanced configuration, the two-stem support system provides axial restoring forces approximately five times greater than the magnetic forces, producing a very stable system, longitudinally.

The entire prestripper cavity will be operated with the NSNS configuration with a maximum integrated quadrupole field of 60 kG/cell. The poststripper will use the NNSS configuration with integrated fields of 17 kG/cell. Magnetic gradients for the various cells are indicated on Fig. 1. The quadrupole design has been previously described.[6] It consists of tape coils, completely filling the volume between poles. The cylindrical yoke forms the drift tube wall with the stems heliarc welded to the yoke. Coaxial current leads enter the magnet through the horizontal stem. The drift tube faces are hydroformed steel (or nonmagnetic stainless steel for the prestripper), heliarc seam welded to the yoke and the magnet bore tube. The magnet yokes will be made in groups, with the drift tube lengths adjusted by cutting the face to the proper length before welding (Fig. 2).

The entire drift tube surface will be copperplated after assembly to a thickness of 0.3 mm. The drift tube and quadrupole will be flood cooled with a flow of approximately 10 liters/min of Freon-115 entering the horizontal stem and forced to flow across one face (and coil end), longitudinally down the yoke, across the opposite face and thence to the vertical stem. This flow pattern prevents the entrapment of vapor (or air) at any point in the system. The pressure drop across the drift tube at these flow rates is approximately 1/3 atmosphere, producing a total pressure (to vacuum) on the drift tube face of 4/3

atmosphere. Deflection of the face with these pressures is acceptable (0.2 mm maximum).

The quadrupoles will be operated in series groups of approximately 20 magnets, at maximum currents of either 100 or 150 amperes. This will result in a maximum of about 100 volts coil-to-ground, with 4-5 volts, turn-to-turn. In extended tests, magnets of this design have been operated with 2000 volts, coil-to-ground.

The alignment of the quadrupoles to the beam axis will be carried out using a suspended wire technique. In this method a 0.1 cm tungsten wire is stretched taut along the cavity axis (with vertical end adjustment to compensate for sag). With an individual magnet excited, a high-current pulse is passed through the wire. Near the axis of the quadrupole field, the wire is stable in one magnetic plane, and unstable in the other. With the current pulse, the wire will move radially in the unstable plane, in a direction depending upon which side of the magnetic axis it lies. The magnet is moved in this plane until the wire reverses its direction of movement when pulsed. The direction of the current pulse is then reversed and the magnet aligned similarly in the transverse plane.

This technique is extremely fast and simple, and the mean (with regard to axial skew) magnetic axis is aligned to a stable, well-defined beam axis. For magnets of the strength to be used in the Hilac, the axis can easily be aligned to within 0.1 mm of the wire-defined axis.

The tolerances of fabrication of the magnets and of the layout of the hanger systems are such that, with the drift tubes hanging vertically, the transverse magnetic axis and the longitudinal skew are within acceptable limits (8 mr and 3 mr, respectively). The primary adjustment of the quadrupole in the cavity is thus the axial alignment. The quadrupole transverse magnet axes are arranged perpendicularly to the stems so that adjustment to the longitudinal axis as indicated above consists of simple radial movement of each stem.

Vacuum System

The outgassing of the existing system is dominated by the surface of the copper cladding of the steel cavity walls, by virtual leaks in the numerous o-ring seals within the system. Although considerable effort has been made to design the new cavities to eliminate o-rings (particularly on the drift tube stems) which should reduce the outgassing substantially, we are designing the vacuum pumping system to accommodate gas loads based on performance of the existing prestripper cavity. The measured outgassing rate of this cavity averaged over the entire surface is 2×10^{-9} torr liter/sec/cm^2. The new cavities, made of identical wall material, will have a total surface area of approximately 1.7×10^7 cm^2, including diaphragms, and will require a total pumping speed of 30,000 liters/sec for adequate operating pressures.

The introduction of diaphragms into the vacuum vessels, to separate the system into electrically isolated cavities, necessitates the application of individual pumping systems on each of the 8 rf cavities; if identical pumps are used, each must be capable of a speed of approximately 3500 liters/sec. The cost of these pumping

systems, including valves, baffles, manifolds, finishing pumps, controls and installation is estimated at $10,000 each. As an alternative to this complicated, expensive system, we are designing a single 18°K cryopump to pump the entire 50 meters of cavity. The pump will consist of a helium refrigerator, a heat exchanger and a pump which will circulate high density helium through a tube running longitudinally along the wall of the entire vacuum vessel. The 18°K tube will be shrouded with a liquid-nitrogen cooled, high conductance, radiation shield. The entire cryopump structure will be surrounded by a watercooled rf shield of semicircular cross section (Fig. 3).

The system is conductance-limited to calculated pumping speeds of 2000 liters/sec/meter for H_2O and 800 liters/sec/meter for other condensable gases. The cryopump will be augmented with a single small heavily-baffled oil diffusion pump on each vacuum vessel, to handle noncondensables (H_2, He, Ne) and for pumpoff when the cryopump surfaces are purged.

The expected lifetime of the cryosurface, after initial bake in, at the gas loads indicated above, is approximately three months.

A prototype section of this pump is under construction and measurements of pumping speeds for various gases and thermal loads, and the effects of gas loading of the pumping surfaces, will be made shortly.

A cryoline will be extended from the rf prestripper cavity to the ground end of the high voltage Cockcroft-Walton injector to provide clean, highspeed pumping at this point.

rf System

The eight separate linac cavities will be excited by ten RCA Type 6949 beam power triodes, applied as indicated on Fig. 1. The second prestripper cavity will have three amplifiers, one driven and two operated tuned-plate-tuned-grid. All other cavities will be excited by single driven amplifiers.

The length of the cavities was chosen as a compromise between the rf power requirements (to minimize the number of amplifiers required) and the allowable degradation of beam energy resolution, when the various poststripper cavities are operated for partial energy. Each of the amplifiers is capable of delivering 750 kW peak, 250 kW average, at 70 MHz. The system is thus designed to operate at a duty factor of 30% with all cavities adjusted to accept the minimum charge-to-mass ratio particle (maximum electric gradient). For particles of higher charge-to-mass ratio (lower peak power), the duty factor can be increased to a maximum of about 80%.

The cavities will be tuned to a constant frequency which will be maintained through adjustment of fast, motor-driven tuning loops, described above. Phasing between the various cavities (which must be adjustable to produce the partial energy beams) will be maintained to within about 0.5 degree with a 10 MHz bandwidth electronic regulator.

The rf amplitudes in the various cavities which, in some cases must vary over a range of 5:1 on a pulse-to-pulse basis, will be adjusted by a combination of grid and plate modulation to within 0.1%.

The existing 25 kV, 7 MW, power supply will be upgraded, by additional cooling of the transformers, to increase its capability to 12 MW peak, 9 MW average. All of the amplifiers will be powered with this single supply through a system of parallel plate modulators. Additional modifications are being made to this system to decrease losses in the filter network and to decrease the modulator voltage drop. These modifications are expected to result in an increase in the power supply efficiency from the present 55% to about 75%. The overall efficiency of the system, including the amplifiers, is expected to be about 45%, resulting in a peak rf capability of about 5.5 MW.

Injector

The prestripper Alvarez linac is designed to accept particles with $0.045 \leq \epsilon \leq 0.2$ at an energy of 0.1125 MeV/amu, requiring injection potentials $0.56 < V_o < 2.5$ MV. Two injectors will be provided; one, the existing air insulated Hilac injector upgraded to operate at a maximum of about 0.8 MV, will be capable of injecting particles with $\epsilon \geq 0.145$. This system will produce intense beams of the light elements, and modest beams with $M \leq 80$ (bromine).

For particles with $M > 80$ a pressurized 100 kHz shunt-fed Cockcroft-Walton of the Dynamitron type is being constructed. The design of this injector is unusual in this important aspects (Fig. 4). The first concerns the size, weight (1200 kg), and power requirements of the complex, heavy-ion source and its auxiliary equipment. The second is the requirement for rapid access to the ion source due to its short life. The third is the regulation requirement of $1{:}10^4$ for the terminal voltage under pulsed currents of up to 7.5 mA with duty factors of up to 50%. The Dynamitron appears to be the only type of high voltage generator capable of regulation under these conditions.

The injector system is to operate approximately 5000 hours/year and, to assure maximum reliability, the usual hard tube diodes have been replaced with fast silicon diodes. The Cockcroft-Walton consists of 65 doubler sections each composed of 500 Unitrode UT-71A diodes mounted on a single board. The board is completely shielded and provided with shunt spark-gap paths to protect against transient currents. The diode boards are mounted in the high-voltage column between the gradient rings as shown in Fig. 5. Each doubler section operates at 50 kV (100 kV peak inverse voltage), providing a maximum of 3 MV on the terminal.

The high voltage generator is housed in a pressure vessel, 2.4 meter diam by 5-1/2 meter long. The high voltage structure is cantilevered horizontally off a 15 cm thick steel end plate, which is provided with a pneumatically operated rapid-closing clamp. For access to the terminal the pressure vessel can be rolled back from the endplate on tracks.

The injector is operated in $N\text{-}C\Theta_2$ at 17 atm. It was our original intention to provide a high-pressure lock system to enable introduction of a proble to the high-voltage terminal for rapid source change. However, experience with the pressurizing

of the vessel has indicated that the system can be let down, opened, reclosed, repressurized, and operating at voltage within about 35 minutes. We therefore intend to use this procedure for ion source change.

Regulation to $1:10^4$ under pulsed conditions is to be provided by screen modulation of the oscillator with an error signal derived from a compensated divider. Band width of the regulation is approximately 30 kHz.

The fabrication of the 3 MV high-voltage generator is essentially completed, and it has been operated at design voltages, with the accelerating tube in place, but without beam. The silicon diode scheme has proved highly successful; debugging of the high-voltage system has been carried out with numerous full-voltage spark downs without the loss of a single diode.

The ion source to be used in this injector is a miniaturized version of the Hilac source, of simplified construction and requiring a magnetic gap of 5 cm. The beam from this source, extracted at 25 kV, is magnetically analyzed through 120°, and focused on a slit 25 cm from the accelerator tube entrance. The ion source and magnet is shown in Fig. 6ab, and a schematic of the ion source and beam transport system in Fig. 7ab.

Gas loads of up to 0.5 STP cc/min will be handled in the terminal with a small 18°K cryopump. Two pumping fingers, both cooled from a single refrigerator head, will be provided, one within the ion source magnet and the other at the entrance of the accelerating column. Under full gas load, this system has produced pressures of 50 μtorr in the source region and 5 μtorr at the accelerating tube entrance.

The ion source and its auxiliary equipment require approximately 20 kVA for operation, to be supplied with a shaft driver, 800 Hz, 240 volt, 3Ø alternator. A 110 V, 60 Hz, 1Ø alternator has also been provided for the operation of the cryopump compressor and for various control motors.

Cooling of the terminal equipment will be accomplished by circulating 100 liter/min of Freon-115 from the ground end through nylon tubes within the high voltage column.

A light telemeter system of 1 MHz band width with 120 twelve-bit digital channels and two 100 kc analog channels will be used for the control and monitoring of the ion source.

A prototype of the ion source analyzing magnet and beam transport system has been constructed and emittance measurements have been made. Prototypes of all of the ion source electronics and control systems have been fabricated and bench tested. Operating equipment is presently under construction and will be installed on the high-voltage terminal in late October 1970.

In anticipation of the severe problems of operating this complex and delicate equipment within a high-voltage terminal under conditions of sparkdown, the fabrication schedule allows approximately 8 months for debugging and beam studies before the injector must be installed on the SuperHilac.

Anticipated Performance

As noted above, the transverse acceptance of the prestripper linac is calculated to be about 6π cm-mr in both transverse planes and the injector emittance, using the standard Hilac ion source configuration with 25 kV extraction, at 2π cm-mr. The first cavity of the linac can be operated with a synchronous phase angle of up to 30°. With bunching, and including phase area matching and transport losses from source to linac, we expect that at least 25% of the peak current from the source will be accepted by the linac. No particles are expected to be lost in transiting the prestripper cavity.

The rf system will be pulsed with the rate and pulse width completely variable. The system is designed to operate at a duty factor of 0.3 at the peak rf electric gradients necessary for the acceleration of particles with $\epsilon = 0.045$ in the prestripper and $\epsilon = 0.166$ in the poststripper. For particles which can be produced with, and stripped to, higher charge states than these, peak power can be reduced and the duty factor increased up to a maximum of about 0.8.

Until the heavier ions are accelerated and stripped, neither the charge state nor the width of the charge state distribution will be known. For the lighter ions, up to 30% of the incident beam appears in a single charge state and, for the heavier ions, it is expected that this figure will be at least 10%. It is also possible, in cases where maximum intensity of the heavier ions is of importance, to adjust the poststripper cavity to accept at least three adjacent charge states, thus increasing the stripper transmission by about a factor of 2 for these ions.

No other losses are anticipated in the accelerator so that the transmission (ion source to target), including duty factor, is expected to vary from 0.6% for the heavy ions to 6% for the light ions.

The estimates of ions source outputs for the heavy ions are tentative. The work on ultraheavy ions to date (with xenon and mercury) indicate that the cold-cathode Hilac ion source can be operated with arc currents and voltages adequate to remove electrons with ionization potentials comparable with U^{+11}, and has produced intensities of Hg^{+9} in excess of 10^{13}/second. It is therefore expected that, for materials that can be introduced into the arc plasma in a gaseous form (UF_6, WF_5, etc.) beams in excess of 1 particle microampere (6×10^{12}/second) can be produced with $\epsilon \geq 0.045$. The work to date on the ion source has been limited to demonstration of the feasibility of using the cold cathode PIG for these heavy ions. Subsequent to the demonstration of this feasibility, we have concentrated our limited resources in this area to the development of the mechanical and electrical portions of the high-voltage injector system and to the study of the problems of the transport of the low ϵ beam from the ion source through the charge-state analyzer and the entrance to the dc accelerating column.

For ions of mass greater than 160, it is expected that foil strippers will be required and that foil life will eventually limit the beam intensity of these ions. Assuming that the energy loss within the foil is proportional to the square of the

equilibrium mean stripped charge state and that damage to the foil is a function of the lost energy density then, by comparison with experience with Argon+13 on the Hilac, the foils should have a reasonable life with total incident beams of 10^{12}-10^{13}/second, uranium. The foils are thus not expected to be limiting for the initially anticipated beams of heavy ions. As better ion sources are developed, the foils will definitely become the limiting element in the system. There are several promising schemes for the solution of this problem, however, (high density gas jets, liquid films, etc.) the development of which will be undertaken in parallel with ion source development.

The anticipated intensities from the accelerator are therefore limited by the ion source output, which in turn depends on the Z of the particle, its chemical and/or vapor pressure at ion source temperatures, and on its isotopic composition. The source output will vary from several particle milliamperes ($\geq 10^{16}$/sec) for the light gaseous elements (through krypton) to one particle microampere for the heavy low vapor pressure elements (or elements that can be introduced into the source plasma in a gaseous form). Limited experience with the sputter ions source indicates the possibility of currents varying from 10^{14}/sec for the light metalic elements, to 10^{11}/second for the moderately heavy refractory elements. There are thus a large number of the heavy ions that can be accelerated with intensities of greater than 10^{11}/second.

Schedule

The construction schedule for this project calls for the shutdown of the Hilac in late January 1971. Several modifications to the building must be made before installation of the linac cavities can be commenced in March.

The cavities should be installed and ready for rf testing in August, with first beam tests, using the 0.8 MV injector, with light ions (krypton) commencing in September. Installation of the 3 MV injector will be delayed until late summer to allow time for its complete debugging. Heavy ion beams using this injector are expected in October.

Debugging of the complete system will continue throughout the year. A limited time will be scheduled for research as soon as beam is available. The fraction of time devoted to research will increase as debugging progresses with a full research schedule anticipated in early spring, 1972.

Acknowledgements

The Heavy Ion Accelerator Group involved with the design of the SuperHilac consists of 34 physicists, electronic and mechanical engineers, designers and technicians. They have graciously allowed the author to report the progress of their work without individual identification.

References

*This work was done under the auspices of the U. S. Atomic Energy Commission.

1. B. Gavin, Nucl. Instr. and Methods 64 (1968) 73-76.
2. C. Schmelzer and D. Böhne (to be published in the Proceedings of the 1970 Proton Linear Accelerator Conference, Batavia, Ill.)
3. F. Selph, University of California Lawrence Radiation Laboratory Report UCRL-19901, (also to be published in the Proceedings of the 1970 Proton Linear Accelerator Conference, Batavia, Ill.
4. K. Halbach, University of California Lawrence Radiation Laboratory Report UCRL-19932, (also to be published in the Proceedings of the 1970 Proton Linear Accelerator Conference, Batavia, Ill.)
5. J. Haughian and R. Main, Proceedings of the National Particle Accelerator Conference, Washington, D.C., March 1969, (University of California Lawrence Radiation Laboratory Report UCRL-18542).
6. R. Main, J. Haughian, R. Meuser, Proceedings of the 1966 Linear Accelerator Conference, Los Alamos, New Mexico, October 1966, (University of California Lawrence Radiation Laboratory Report UCRL-17156).

Figure Captions

Fig. 1. Design Parameters for the SuperHilac.

Fig. 2. Drift Tube - Quadrupole Assembly.

Fig. 3. Cryopump Structure - Section.

Fig. 4. 3MV Injector.

Fig. 5. Diode Board. and Shield.

Fig. 6a.b. Ion Source and Magnet.

Fig. 7a.b. Schematic Ion Source and Terminal Transport System.

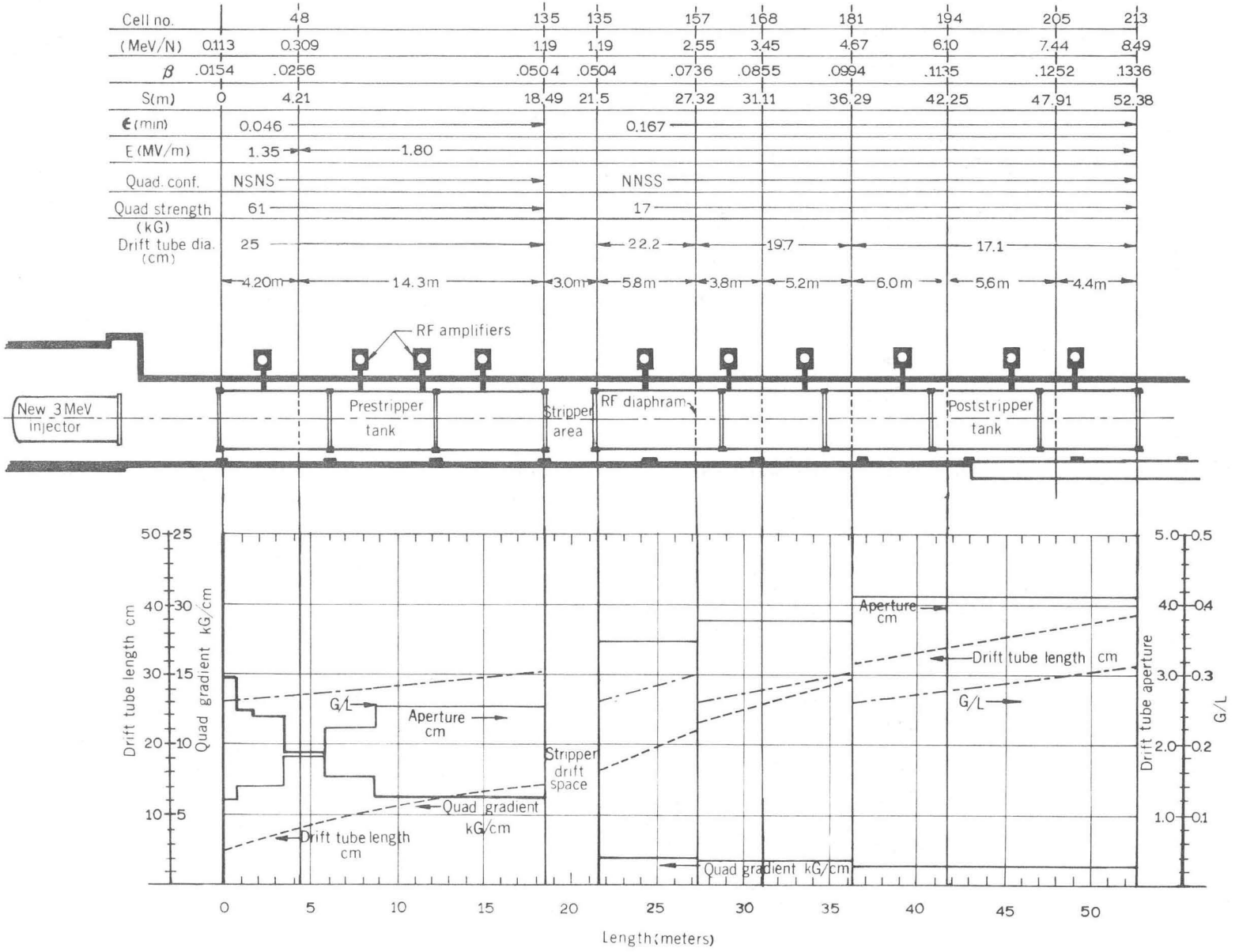

XBL 709 6242

Fig. 1

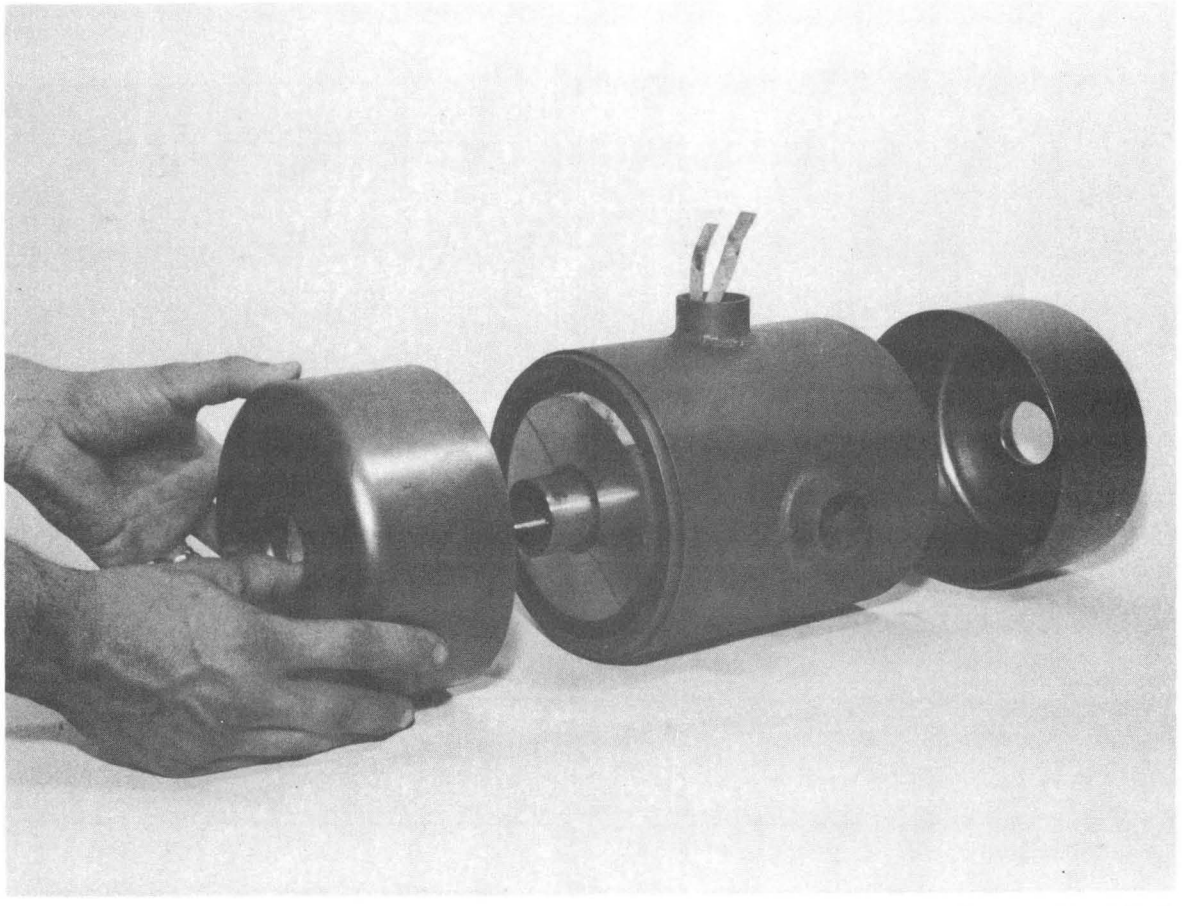

CBB 709-3972

Fig. 2

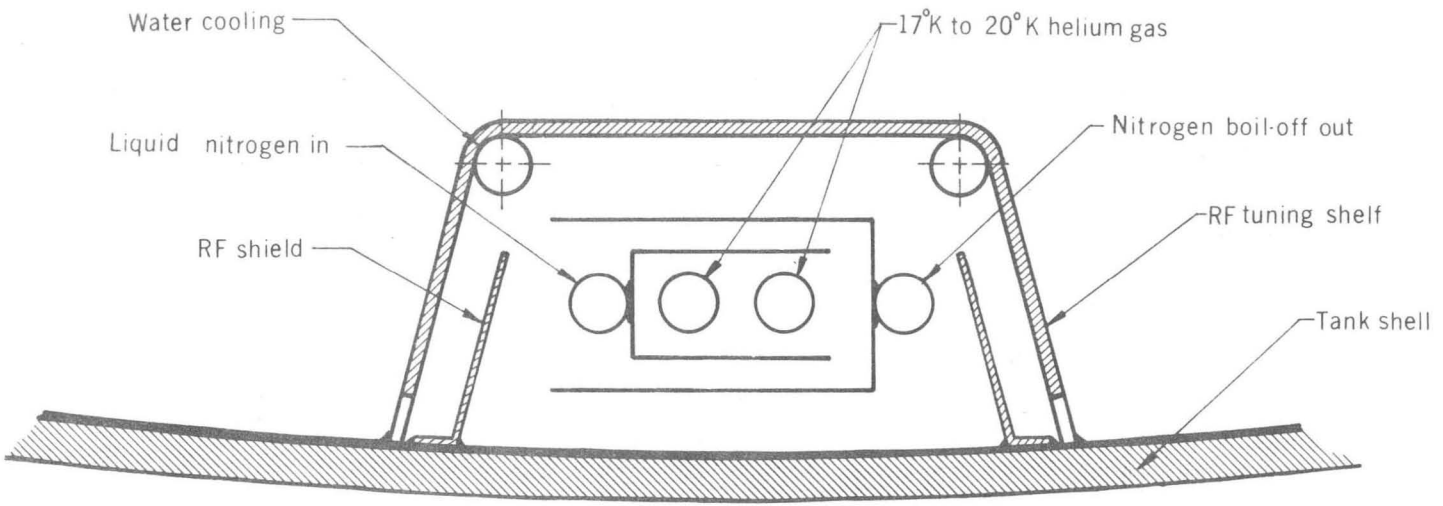

SuperHILAC cryopump

XBL 709-6251

Fig. 3

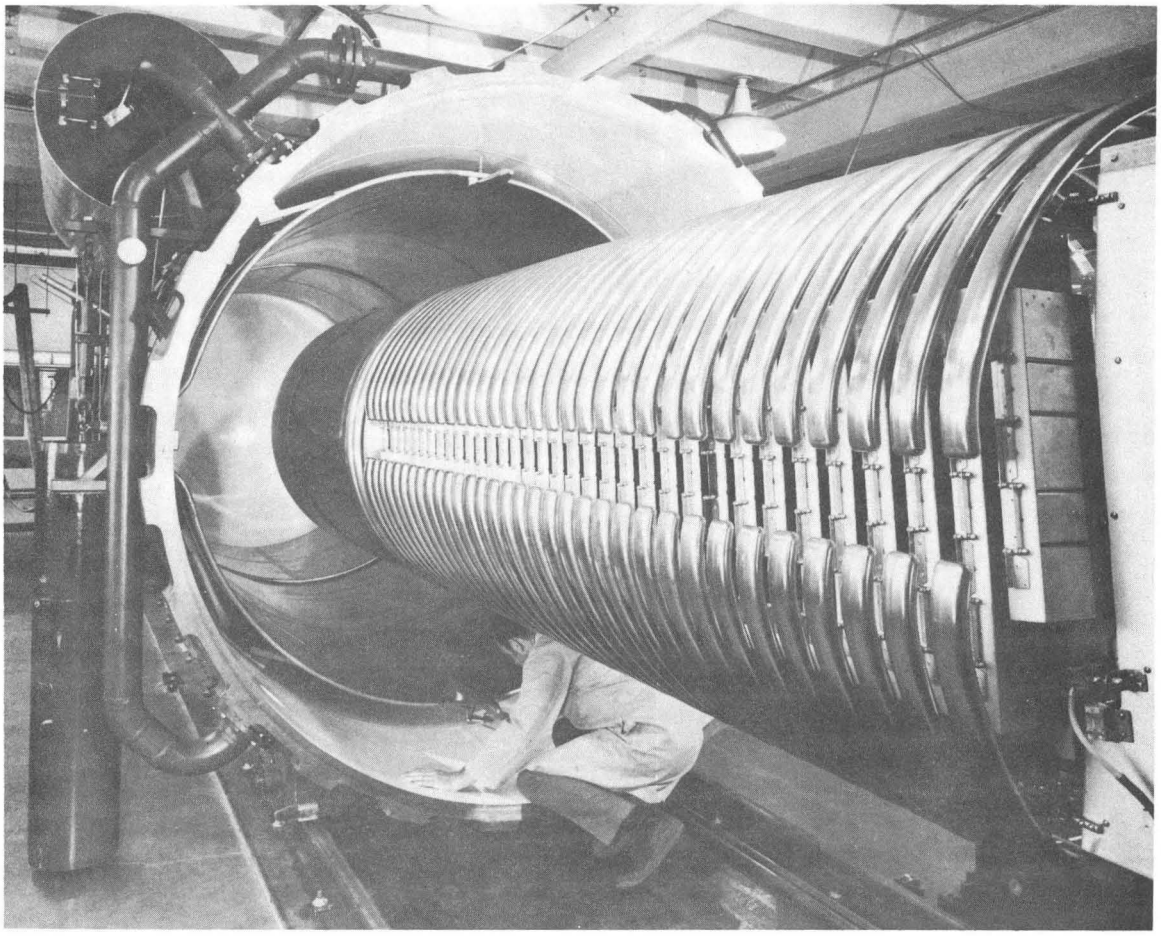

XBB 709-4049

Fig. 4a

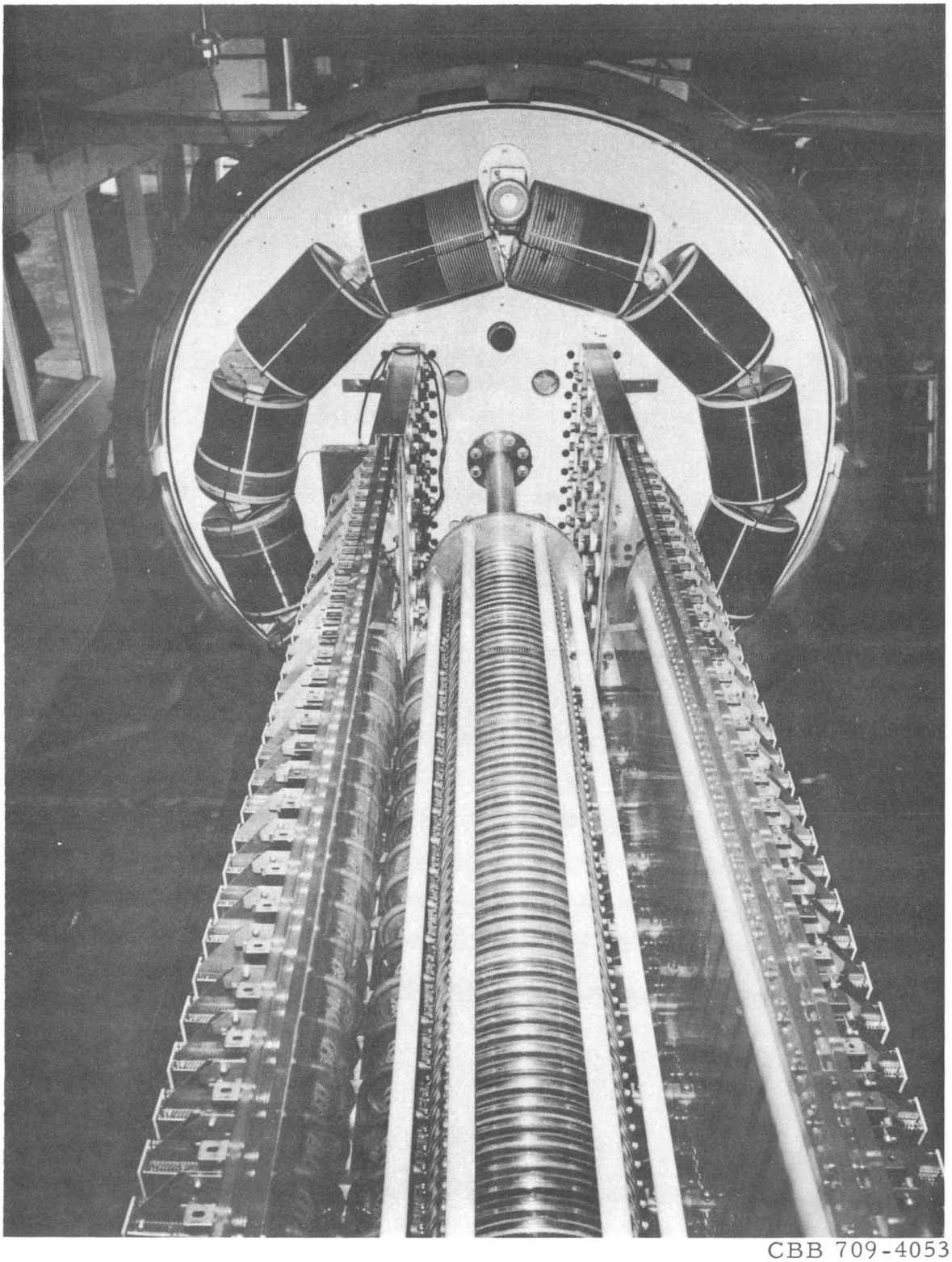

CBB 709-4053

Fig. 4b

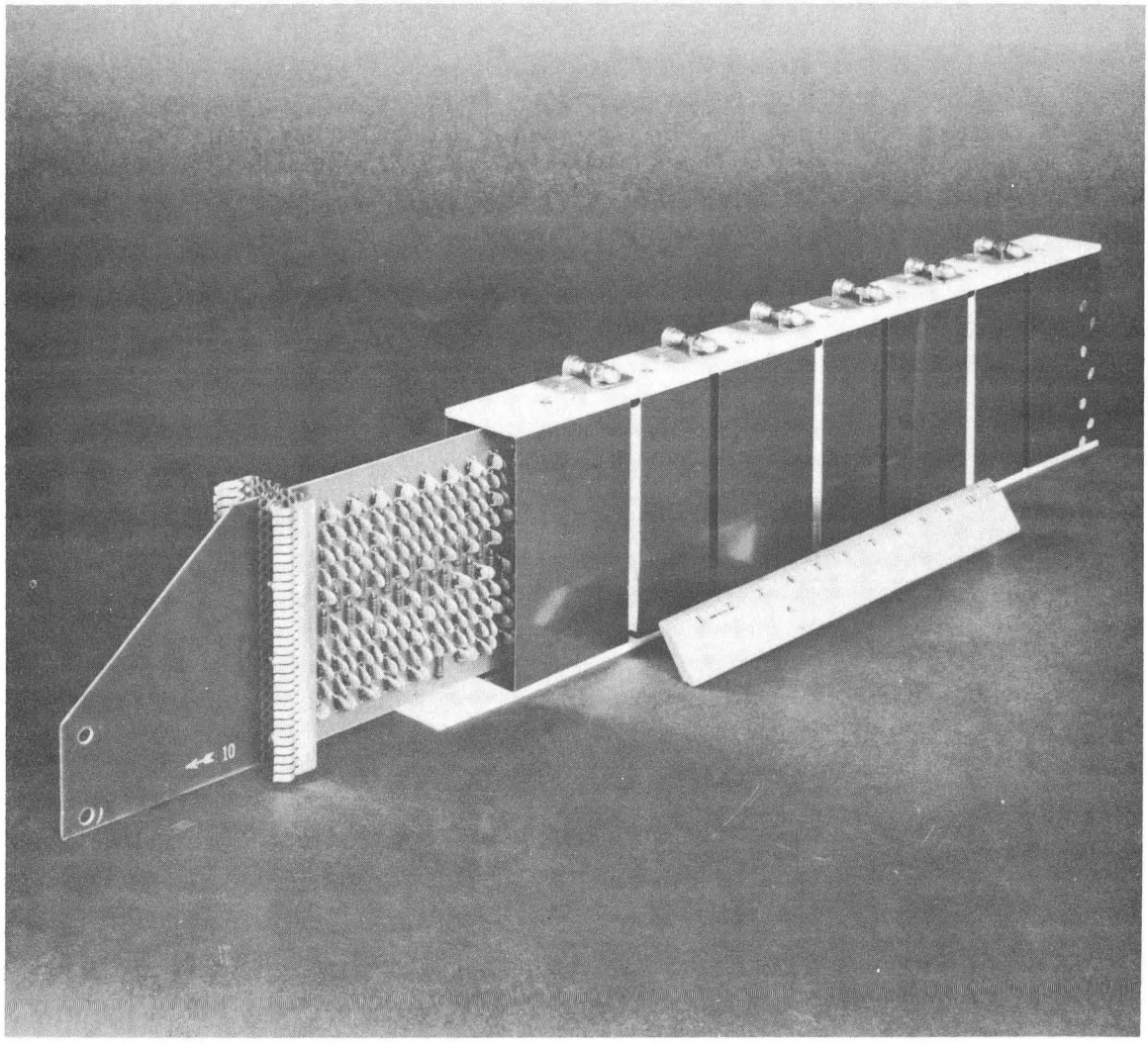

CBB 703-1506

Fig. 5

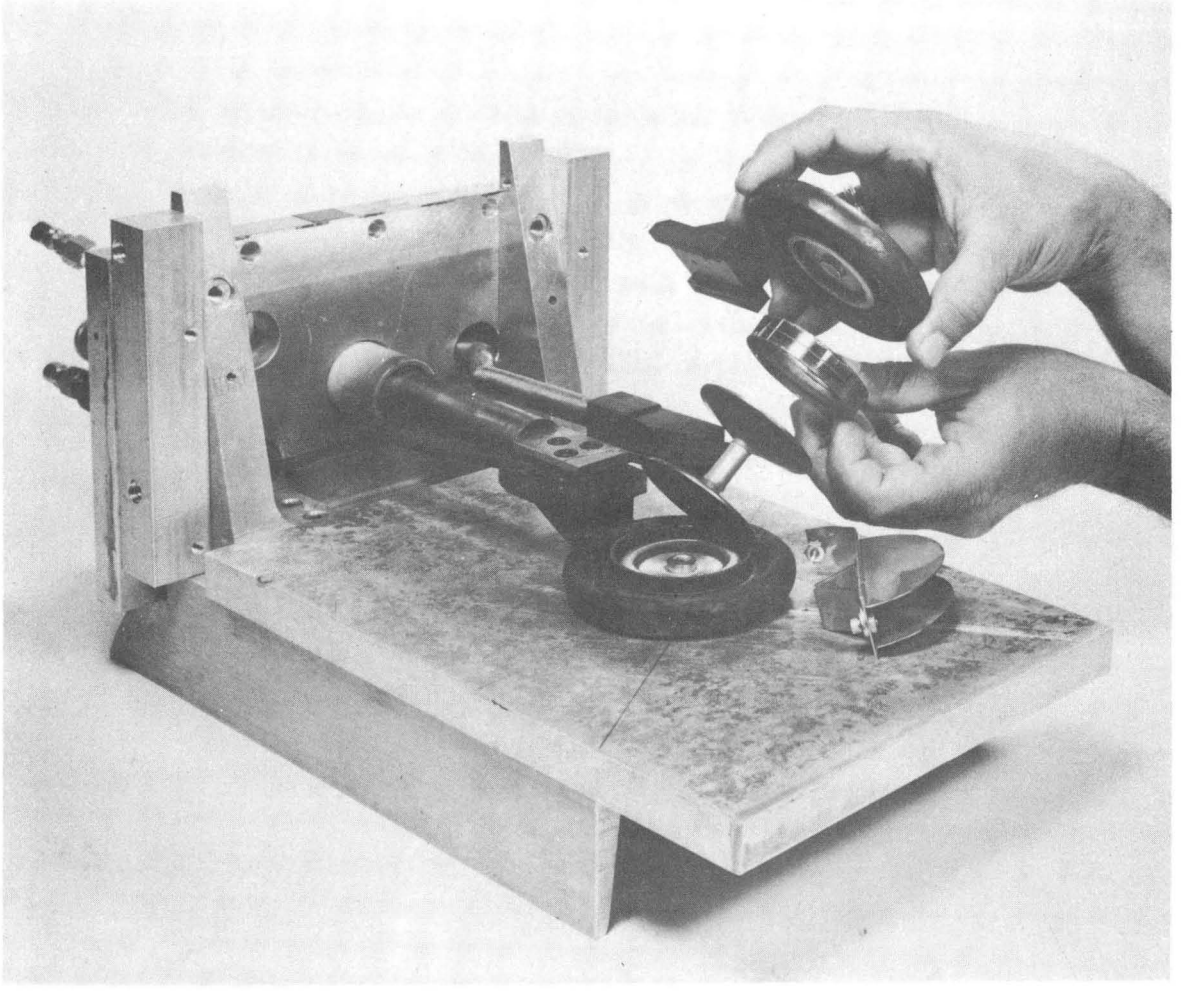

XBB 709-4058

Fig. 6a

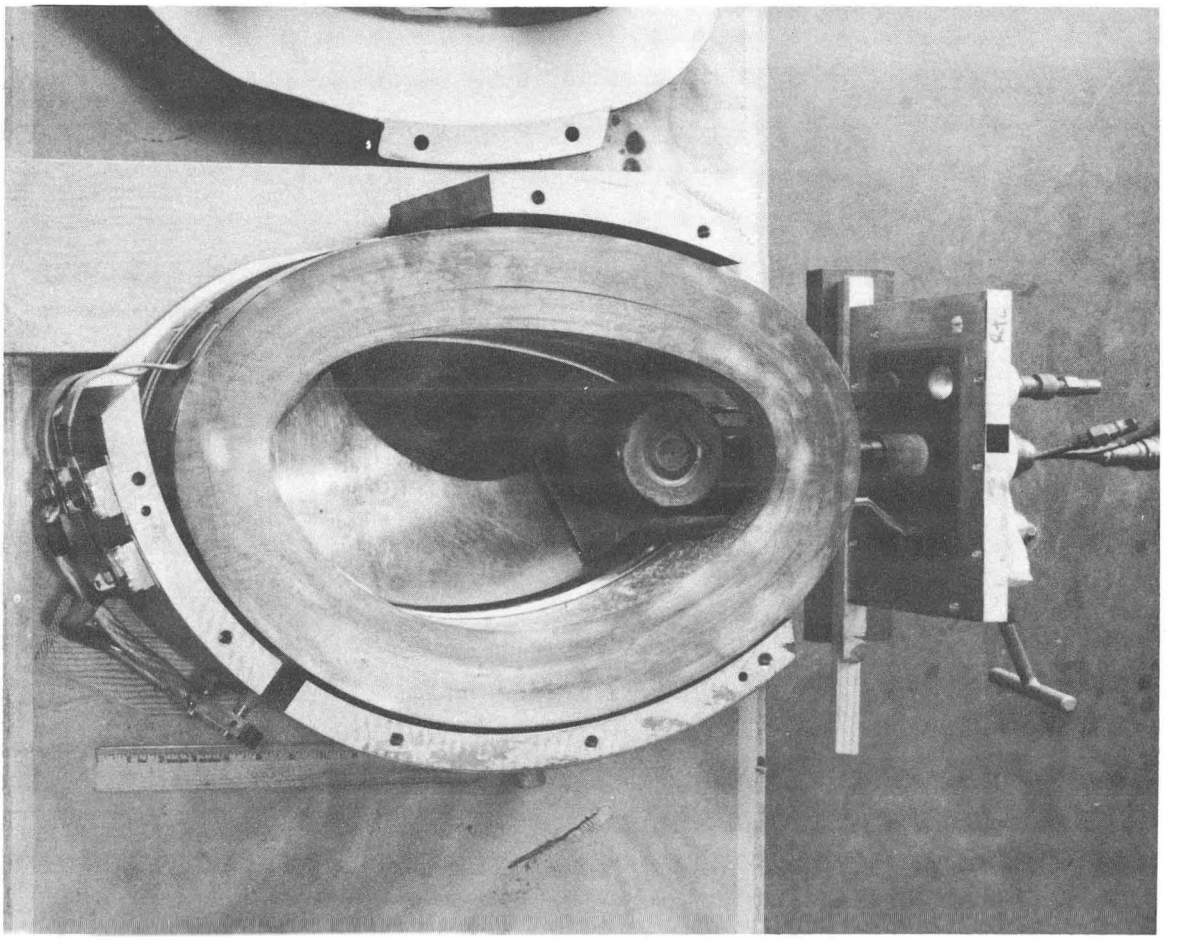

XBB 709-3856

Fig. 6b

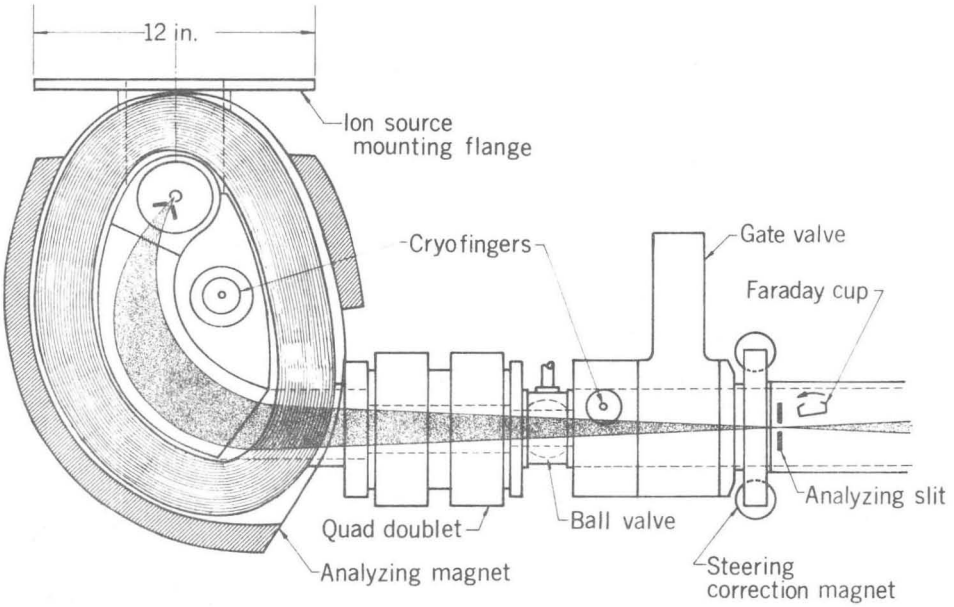

Plan view

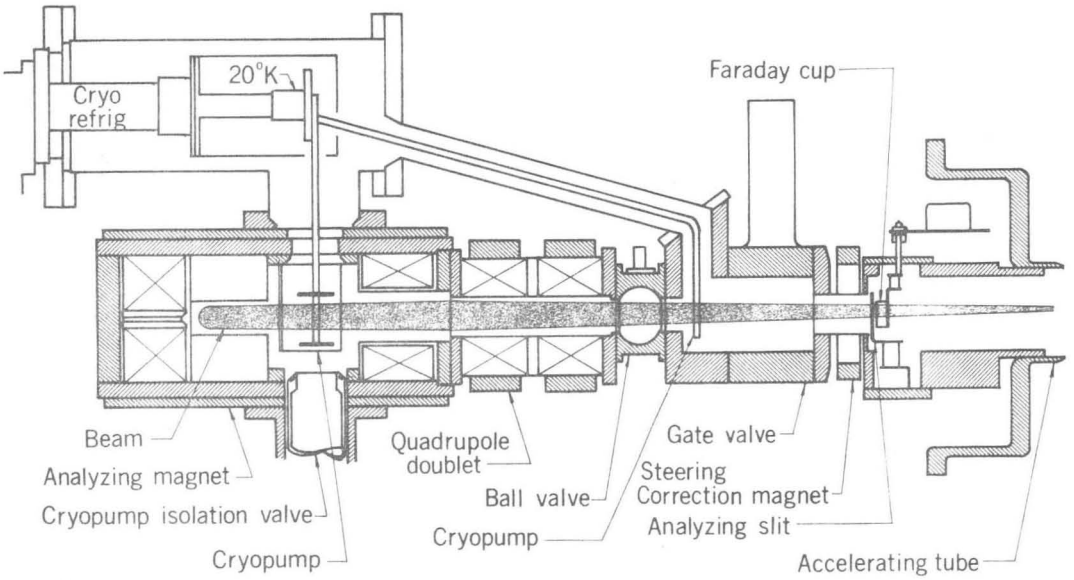

Section

Ion source and beam transport

XBL 709 6241

Fig. 7

LEGAL NOTICE

This report was prepared as an account of Government sponsored work. Neither the United States, nor the Commission, nor any person acting on behalf of the Commission:

A. Makes any warranty or representation, expressed or implied, with respect to the accuracy, completeness, or usefulness of the information contained in this report, or that the use of any information, apparatus, method, or process disclosed in this report may not infringe privately owned rights; or

B. Assumes any liabilities with respect to the use of, or for damages resulting from the use of any information, apparatus, method, or process disclosed in this report.

As used in the above, "person acting on behalf of the Commission" includes any employee or contractor of the Commission, or employee of such contractor, to the extent that such employee or contractor of the Commission, or employee of such contractor prepares, disseminates, or provides access to, any information pursuant to his employment or contract with the Commission, or his employment with such contractor.

TECHNICAL INFORMATION DIVISION
LAWRENCE RADIATION LABORATORY
UNIVERSITY OF CALIFORNIA
BERKELEY, CALIFORNIA 94720