Submitted to Analytical Chemistry

UCRL-19967
Preprint

c. 2

A RAPID, NONDESTRUCTIVE METHOD OF FLUORINE ANALYSIS BY ^{3}He ACTIVATION

Diana M. Lee, James F. Lamb
and Samuel S. Markowitz

September 1970

OCT 7 1970
LIBRARY AND
DOCUMENTS SECTION

AEC Contract No. W-7405-eng-48

TWO-WEEK LOAN COPY

This is a Library Circulating Copy which may be borrowed for two weeks. For a personal retention copy, call Tech. Info. Division, Ext. 5545

LAWRENCE RADIATION LABORATORY
UNIVERSITY of CALIFORNIA BERKELEY

UCRL-19967 c.2

DISCLAIMER

This document was prepared as an account of work sponsored by the United States Government. While this document is believed to contain correct information, neither the United States Government nor any agency thereof, nor the Regents of the University of California, nor any of their employees, makes any warranty, express or implied, or assumes any legal responsibility for the accuracy, completeness, or usefulness of any information, apparatus, product, or process disclosed, or represents that its use would not infringe privately owned rights. Reference herein to any specific commercial product, process, or service by its trade name, trademark, manufacturer, or otherwise, does not necessarily constitute or imply its endorsement, recommendation, or favoring by the United States Government or any agency thereof, or the Regents of the University of California. The views and opinions of authors expressed herein do not necessarily state or reflect those of the United States Government or any agency thereof or the Regents of the University of California.

A RAPID, NONDESTRUCTIVE METHOD OF FLUORINE ANALYSIS BY ^{3}He ACTIVATION

Diana M. Lee, James F. Lamb, and Samuel S. Markowitz

Department of Chemistry and,
Lawrence Radiation Laboratory,
University of California,
Berkeley, California 94720

September 1970

BRIEF

The nuclide 10.8-sec ^{20}F and NaI scintillation spectroscopy are used to determine fluorine via ^{3}He nuclear reactions. Only milligrams of sample are required; accuracy is 3-5%. Detection limit is 0.2 μg/cm^2 which, in a 100 mg/cm^2 matrix, corresponds to 2 ppm. Excitation functions are presented.

A RAPID, NONDESTRUCTIVE METHOD OF FLUORINE ANALYSIS BY ^{3}He ACTIVATION

Diana M. Lee, James F. Lamb†, and Samuel S. Markowitz

Department of Chemistry and,
Lawrence Radiation Laboratory,
University of California,
Berkeley, California 94720

September 1970

ABSTRACT

A sensitive, nondestructive means of determining fluorine by the $^{19}F(^3He, 2p)^{20}F$ reaction with the 1.63-MeV gamma ray of 10.8-sec ^{20}F as the "signal" for fluorine is presented. Excitation functions for the $^{19}F(^3He, 2p)^{20}F$ and the $^{19}F(^3He, \alpha)^{18}F$ reactions and the possible interfering reaction, $^{18}O(^3He, p)^{20}F$, are given. Thin samples of LiF, Teflon, and PbF_2, and thick samples of LiF and PbF_2 mixed in platinum were analyzed. Only milligram amounts of sample are required. The accuracy is about 3 to 5%. Under reasonable irradiation and counting conditions, the detection limit is approximately 0.2 $\mu g/cm^2$ corresponding to 2 ppm in a matrix 100 mg/cm^2 thick. With better care in shielding the NaI(Tl) scintillation detectors from the gamma-ray background in the accelerator area, the detection limit could be lowered.

†Present address: Medi-Physics, Emeryville, California.

INTRODUCTION

Fluorine determinations by activation analysis have been reported by several authors. Depending on the incident particle, fluorine can be measured with various degrees of success by thermal neutrons (1), fast neutrons (2,3), alpha-particles (4), protons (5), and photons (6). Ricci and Hahn (7), using 5- and 10-MeV helium-3 ions, determined detection limits for several light elements, including fluorine, normalized to a beam current of 100 μA; they considered only the reactions $^{19}F(^{3}He, \alpha n)^{17}F$ and $^{19}F(^{3}He, \alpha)^{18}F$. Yule (8) has estimated the limit of detection of F to be 0.55 μg using the $^{19}F(n, \gamma)^{20}F$ reaction with reactor-produced thermal neutrons at a flux of 4.3×10^{12} n/cm^{2}-sec.

In the present work, we have investigated the application of the reactions $^{19}F(^{3}He, 2p)^{20}F$ and $^{19}F(^{3}He, \alpha)^{18}F$ to the analysis of fluorine. The absolute excitation functions for production of 10.8-sec ^{20}F and 110-min ^{18}F from ^{19}F have been determined and samples have been analyzed. We suggest a wide range of application to both organic and inorganic samples by using the 1.63-MeV gamma-ray of ^{20}F induced by ^{3}He reactions as a "signal" that is relatively free from interferences caused by other activities that may be present. A number of thin and thick samples were analyzed nondestructively to test the accuracy of the method.

EXPERIMENTAL

Targets: LiF, vacuum-evaporated onto platinum foil and covered with ~ 10 mg/cm^2 tantalum foil was used to measure the absolute excitation function of the $^{19}F(^3He, 2p)^{20}F$ reaction, Teflon foils $(CF_2)_n$, were used to measure the absolute excitation function of $^{19}F(^3He, \alpha)^{18}F$. Targets were about 1 mg/cm^2 thick. For the subsequent analyses of fluorine, samples were synthesized as thin targets and as thick ones. All thin targets, except the Teflon foils, were prepared by LiF or PbF_2 vacuum evaporation; thickness of these targets ranged from 0.25 mg/cm^2 to 1.7 mg/cm^2 F. The thick targets were prepared by homogenizing a known, small amount LiF or PbF_2 with platinum powder (approx. 200 mg/cm^2) and then pressing the mixture into a thin disc. These samples approximated "thick targets" for analysis of trace fluorine. The targets were 1.9-cm diameter and the ^3He beam was collimated into a 0.95-cm diameter central spot (area = 0.7 cm^2).

Irradiation: Irradiations were performed at the Berkeley Heavy Ion Linear Accelerator (Hilac) at ^3He beam energies of 2 to 25 MeV; energies were varied by using aluminum degrader foils. The length of bombardment was fixed at 10 seconds and the average beam intensity was about 0.5 μA. The irradiation chamber and the beam current measurement have been previously described (9). The chamber was operated under a helium gas atmosphere rather than in the accelerator vacuum to minimize time-loss during sample retrieval. The activated samples were transferred to the counting chamber by a gravity-track which is shown in Figure 1. The target is mounted over a 0.75-inch diameter centerhole in an aluminum disc held in place during bombardment by a pin attached to the solenoid. At the end of the bombardment the solenoid is

activated, releasing the pin, and the disc to which the target is affixed rolls down the plastic gravity-track to the shielded NaI detectors. This apparatus allows counting to begin within approximately two seconds after the end of the bombardment. During this two-second delay, very short-lived activities decay away.

Counting: The decay of the 10.8-sec ^{20}F activity induced in the target was followed by measuring the associated 1.63-MeV ray with two 3 × 3-inch NaI(Tl) detectors, gated and coupled to a multichannel analyzer operated as a 400-channel scaler. A typical γ-ray spectrum of activated LiF is shown in Figure 2. The gated signals from two detectors were mixed to increase the detection efficiency and were routed to a single-channel analyzer adjusted to cover only the spectral region of the photopeak. The decay of the photopeak is shown in Figure 3. The overall detection coefficient for the 1.63-MeV γ-ray peak was measured with a set of γ-ray standards (Int. Atomic Energy Authority, Vienna) and interpolated to be 1.6%; the sources were about two inches from each crystal. The 1.63-MeV γ-ray is emitted in 100% of the nuclear disintegrations. The NaI(Tl) crystals were shielded by lead and were behind concrete to minimize background from the accelerator area. Decay curves were analyzed by the CLSQ computer program.

RESULTS

Excitation functions: The short-lived ^{20}F precluded the used of the stack-foil technique so that each point in Figure 4 of the ^{20}F excitation function represents a separate bombardment. The maximum cross section is about 70 mb at the ^{3}He energy of 19 MeV; it varies slowly from 12 to 22 MeV. Also shown in the same figure is the excitation function for the production

^{18}F by the reaction $^{19}F(^{3}He, \alpha)^{18}F$. The data of the ^{18}F excitation function shown agree very well with values previously published (10,11).

Sample analyses: ^{20}F activity from ^{3}He-activated fluorine samples was used for analyses. Each sample was irradiated for 10 seconds at a beam energy of 17 MeV. Decay of the 1.63-MeV γ-ray (Figure 3) was followed for 200 to 300 seconds. The amount of fluorine present was calculated by comparing the ratios of the A_o values (activity at end of bombardment) of the samples to a thin LiF standard for thin samples, or to a thick LiF + Pt standard for thick samples. The results of the fluorine analyses for both thin and thick samples are shown in Table I and Table II, respectively. The error values (standard deviations) shown in both tables are based on counting statisitcs decay curve analysis only.

Errors: Comparison of the "F found by activation" and "F present" data in Table I and II indicates that the average percent difference was 4.7% and 2.8% for the thin and thick sample analyses, respectively, as a measure of accuracy for analyses based upon the relative method. In this method, errors in the absolute cross sections and overall detection coefficient are eliminated. Errors in precision are measured to be 1% or less for counting statisitcs and decay-curve calculation of the A_o values, and estimated to be 2% for the beam-intensity monitor and Faraday cup calibration, and about 2% for errors in timing for the ^{20}F experiments. The accuracy of the absolute excitation function is about 5%.

DISCUSSION

Interferences: By using ^{20}F activity, fluorine analyses are relatively free from interferences produced either directly or indirectly by other

elements present in the sample. The direct interference is caused by the same isotope (^{20}F) production; the only obvious interference would be ^{20}F activity produced in any ^{18}O present in the sample. The excitation function of $^{18}O(^{3}He, p)^{20}F$ is shown in Figure 5; the cross section at 17 MeV is about 50 mb, rising to 100 mb at 10 MeV. The isotopic abundance, however, for ^{18}O in natural oxygen is only 0.2%. As the $^{19}F(^{3}He, 2p)^{20}F$ and $^{18}O(^{3}He, p)^{20}F$ cross sections are comparable between 12 to 17 MeV, at equal concentration of fluorine and oxygen impurities in a given matrix, only 0.2% of the ^{20}F activity will have been caused by an interfering ^{18}O. An analysis based upon the production of ^{18}F is also feasible in some cases, but the chances for interference are much greater with ^{18}F as the "signal" than with ^{20}F because ^{16}O would induce a direct interference. This possible interference would be caused by the $^{16}O(^{3}He, p)^{18}F$ reaction whose cross section below 10 MeV is about 20 times greater than the $^{19}F(^{3}He, 2p)^{20}F$ reaction. Indeed, <u>oxygen</u> analysis via the former reaction has been previously described (12).

Sodium might be a possible interference due to the $^{23}Na(^{3}He, \alpha 2p)^{20}F$ reaction. Although the cross sections have not been measured, the threshold is 13.2 MeV; therefore, sodium would be eliminated as an interference by bombardments near or below this energy.

Indirect interferences (nuclides emitting gamma rays about 1.6 MeV) would have to be sufficiently close to 10.8-sec half-life and sufficiently great in quantity to prevent resolution of the ^{20}F 1.63-MeV decay curves. High atomic-number impurities or target matrices will not induce any radioactivities if the ^{3}He energy is controlled to be below the Coulomb barrier.

Estimate of detection limit: Under the following conditions: Beam current 1 μA, cross section 70 millibarns, length of bombardment 10.8 seconds;

we found D_o (disintegration rate at end of bombardment) to be 5.7×10^5 dps per mg/cm^2 of F. With our overall detection coefficient of only 1.6%, this gives about 10^4 counts per second in the gamma photopeak. As the background was about 40 cps, this corresponds to a factor of about 250 times background. At equal signal and background rates, under our easy conditions, we could detect ~ 4 μg/cm^2 F. Because the beam intensity can be increased to 10 μA (or greater), and the detection coefficient can be easily doubled, the detection limit can be lowered to 0.2 μg/cm^2 F. If the matrix in which the F is imbedded is 10 to 100 mg/cm^2 thick, the concentration limit would therefore be 20 ppm to 2 ppm, respectively. With more care for shielding, the background and therefore the detection limit could be further lowered. The sensitivity, of course, will depend upon the presence of interferences and the matrix.

Work performed under the auspices of the U. S. Atomic Energy Commission.

LITERATURE CITED

(1) B. Van Zanten, D. Decat, and G. Leliaert, Int. J. Appl. Radiat. Isotopes, 14, 105 (1963).

(2) W. Leonhardt, Kernenergie, 6, 45 (1963).

(3) O. U. Anders, Anal. Chem., 32, 1368 (1960).

(4) I. N. Plaskin, M. A. Belyakov, and L. P. Starchik, Atom. Energ., 13, 374 (1962).

(5) T. B. Pierce, R. F. Peck, and D. R. A. Cuff, Analyst, 92, 143 (1967).

(6) L. Kosta and J. Slunecko, Anal. Chem., 42, 831 (1970).

(7) E. Ricci and R. L. Hahn, Anal. Chem. 37, 742 (1965).

(8) H. P. Yule, ibid., 37, 129 (1965).

(9) J. F. Lamb, D. M. Lee, and S. S. Markowitz, Proc. 2nd Conf. on Practical Aspects of Activation Analysis with Charged Particles, Liege, Euratom, Brussels, 1967, 1, 225 (1968).

(10) O. D. Brill, Soviet J. Nucl. Phys. 1, 37 (1966).

(11) John D. Mahony, Reaction of ^{3}He with Light Elements; Application to Activation Analysis, (Ph.D. Thesis), UCRL-11780, 1965.

(12) S. S. Markowitz and J. D. Mahony, Anal. Chem., 34, 329 (1962).

Table I. Fluorine Analysis of Thin Samples[a]

Sample	F present (mg/cm^2)	F found (mg/cm^2)
LiF #13	1.68	standard
LiF #14	1.24	1.17±0.008[b]
LiF #12	1.03	1.02±0.007
LiF #16	0.82	0.82±0.007
LiF #21	0.77	0.73±0.007
LiF #19	0.54	0.53±0.007
LiF #22	0.25	0.23±0.007
Teflon #1 (CF_2)	1.85	1.90±0.010
Teflon #2	0.93	0.90±0.007
PbF_2 #1	0.29	0.26±0.007
PbF_2 #2	0.22	0.21±0.007

[a]Irradiated area of samples = 0.7 cm^2

[b]Standard deviation of decay-curve analysis

Average % difference = 4.7%

Table II. Fluorine Analysis of Thick Samples[a,b]

Sample	F present (mg/cm^2)	F found (mg/cm^2)
Pt + LiF	1.02	standard
Pt + PbF_2 #1	1.53	1.54±0.016[c]
Pt + PbF_2 #2	0.33	0.32±0.010
Pt + PbF_2 #3	1.28	1.22±0.018

[a]Irradiated area of samples = 0.7 cm^2

[b]Total sample thickness ~ 200 mg/cm^2 Average % difference = 2.8%

[c]Standard deviation of decay-curve analysis

FIGURE CAPTIONS

Fig. 1. Gravity-track sample holder for rapid retrieval of an activated target.

Fig. 2. Gamma-ray spectrum from LiF + 17-MeV ^{3}He.

Fig. 3. Decay of the gated 1.63-MeV γ-ray from ^{20}F.

Fig. 4. Excitation functions for production of ^{20}F and ^{18}F from ^{19}F.

Fig. 5. Excitation function for the reaction $^{18}O(^{3}He,p)^{20}F$.

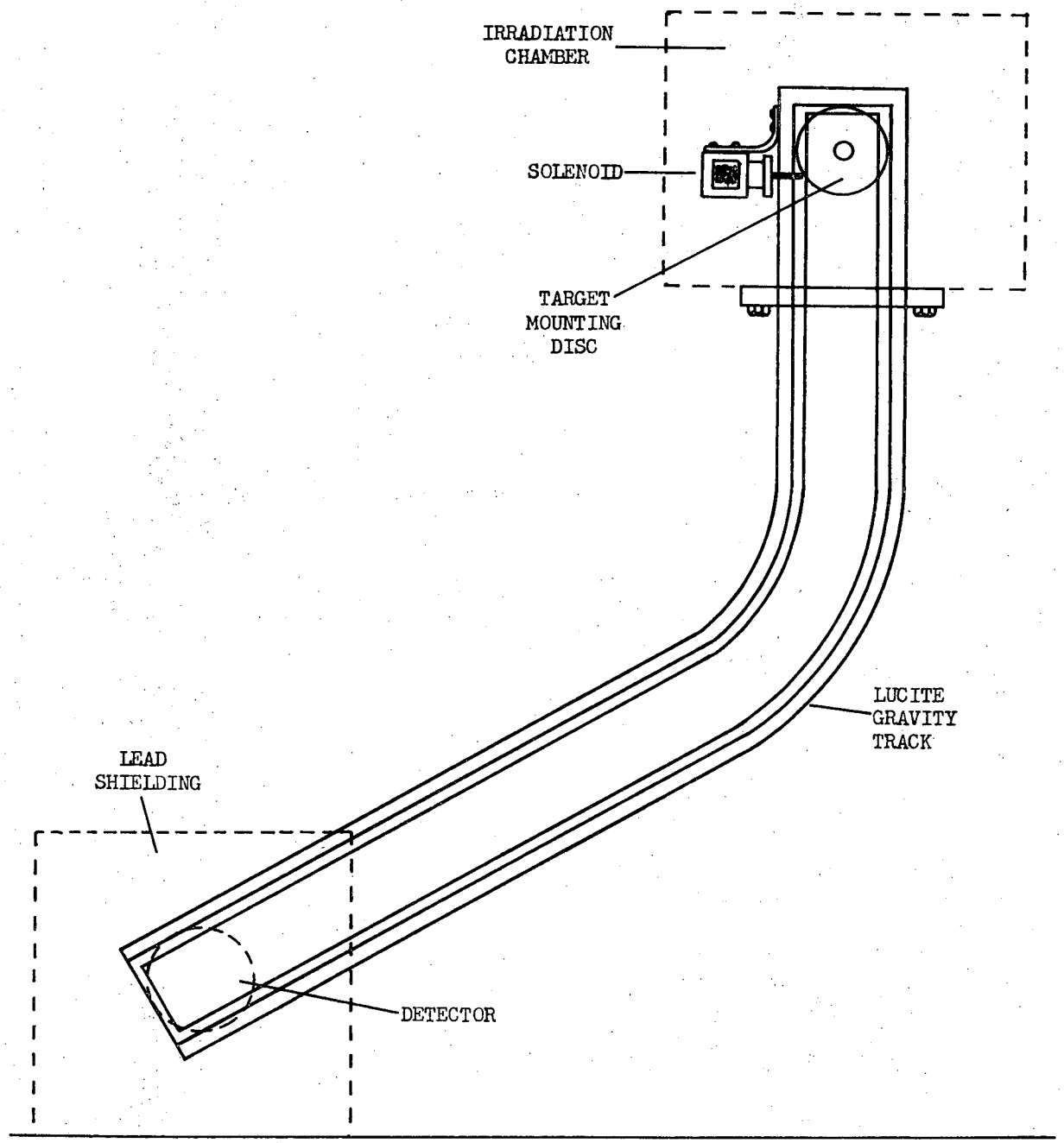

XBL 697-1037

Fig. 1

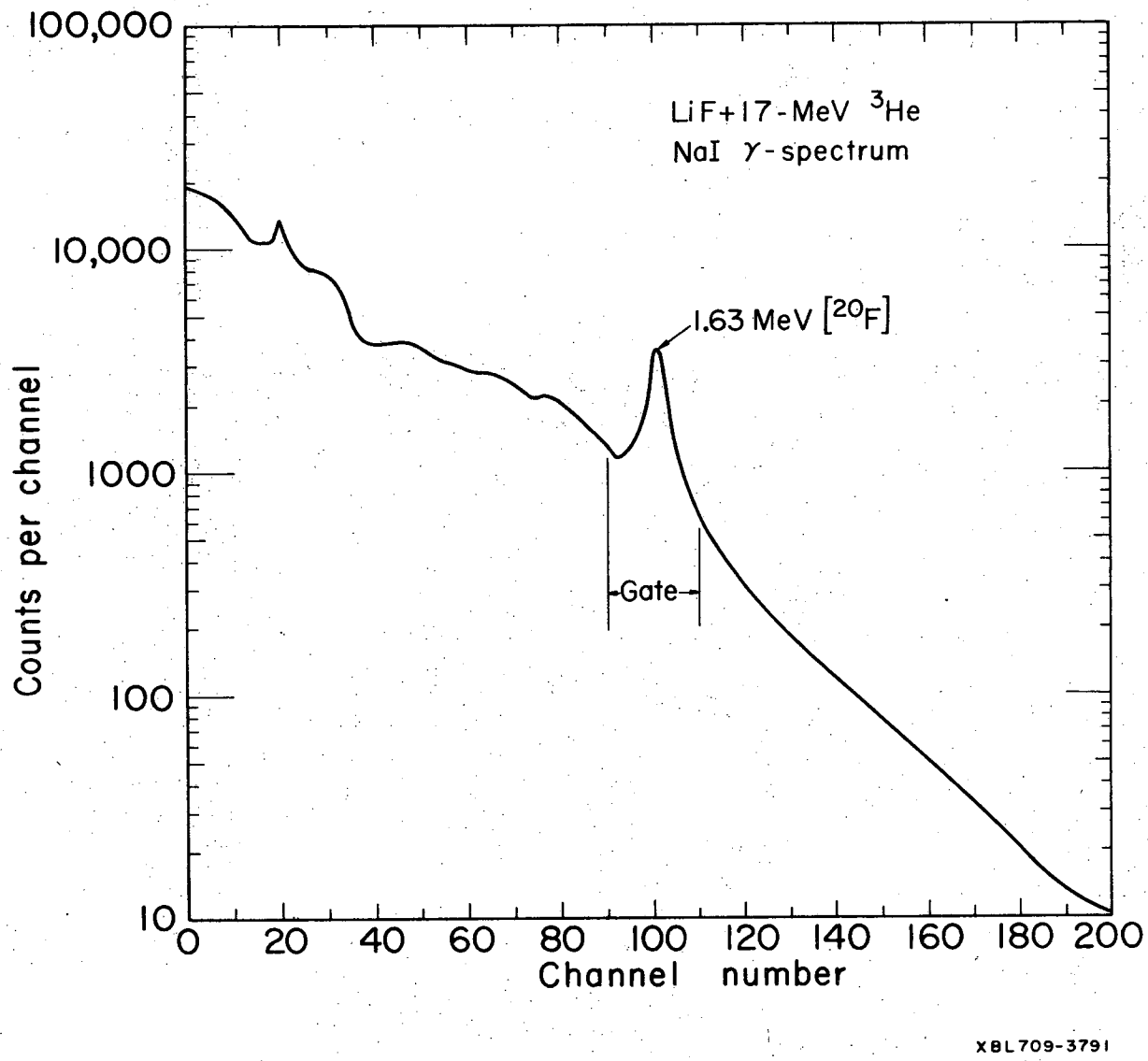
LiF+17-MeV ^{3}He
NaI γ-spectrum
1.63 MeV [^{20}F]
Gate
Counts per channel
100,000
10,000
1000
100
10
0
20
40
60
80
100
120
140
160
180
200
Channel number
XBL709-3791

Fig. 2

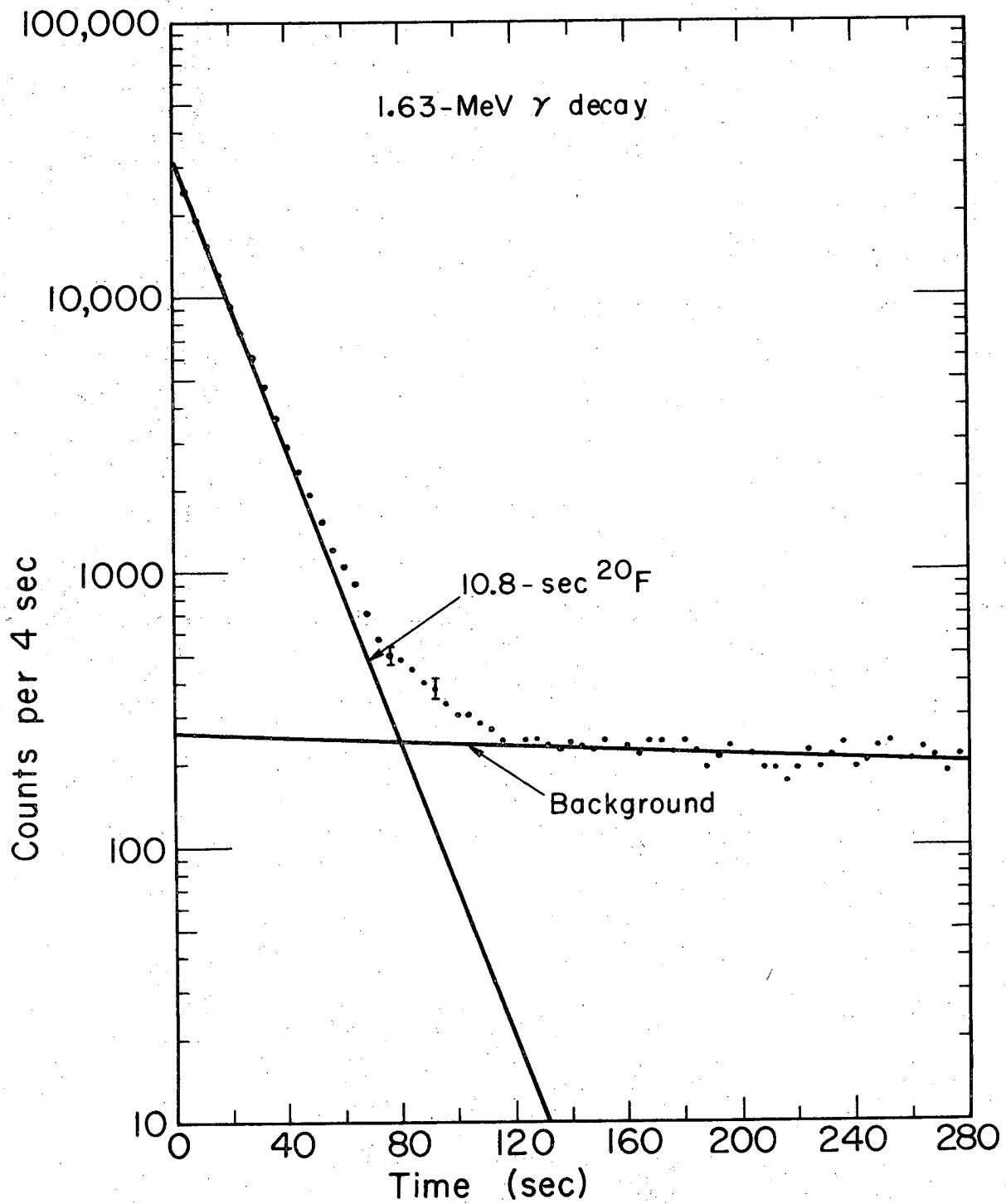

XBL709-3792

Fig. 3

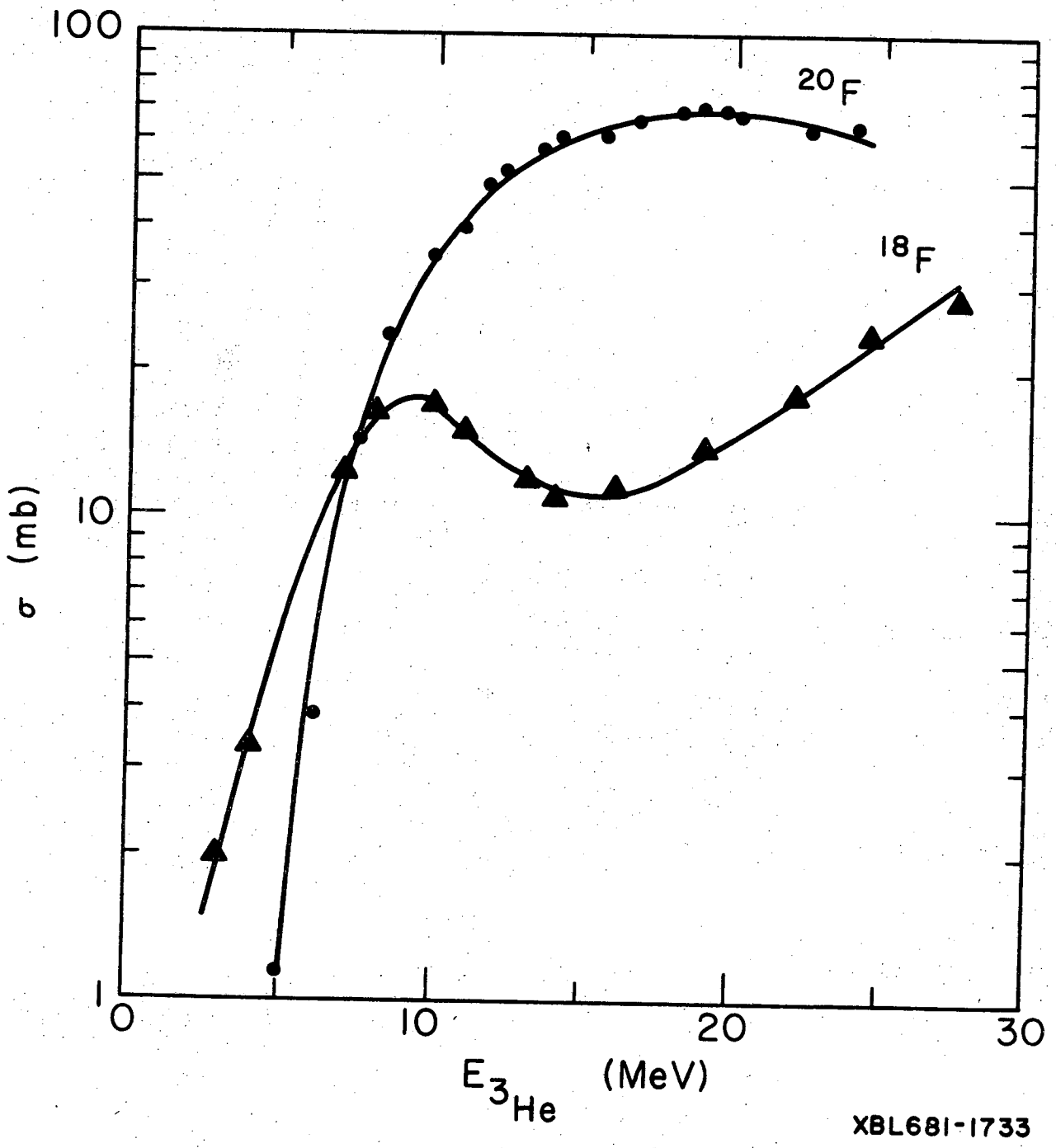

Fig. 4

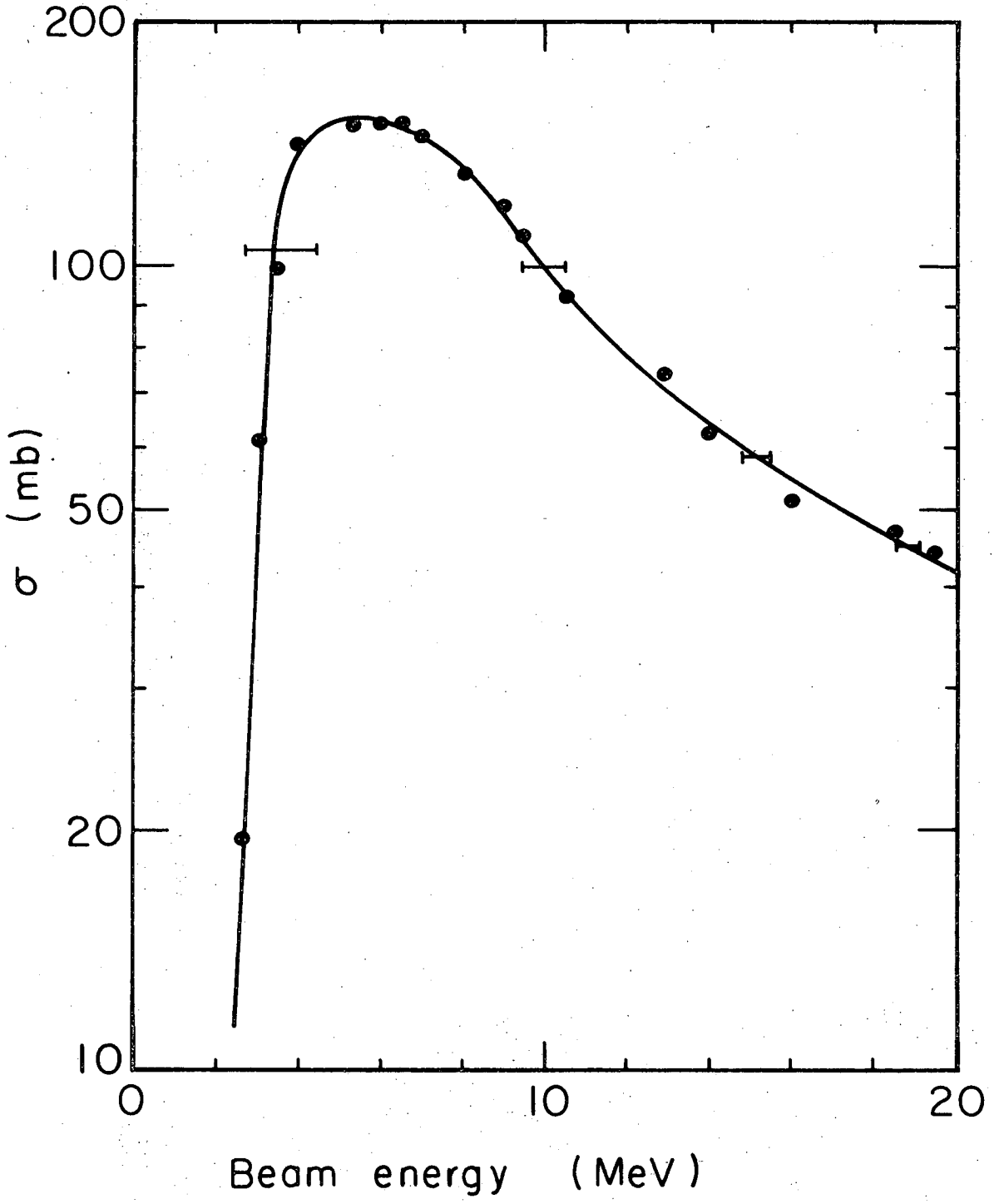

XBL671-330

Fig. 5

LEGAL NOTICE

This report was prepared as an account of Government sponsored work. Neither the United States, nor the Commission, nor any person acting on behalf of the Commission:

A. Makes any warranty or representation, expressed or implied, with respect to the accuracy, completeness, or usefulness of the information contained in this report, or that the use of any information, apparatus, method, or process disclosed in this report may not infringe privately owned rights; or

B. Assumes any liabilities with respect to the use of, or for damages resulting from the use of any information, apparatus, method, or process disclosed in this report.

As used in the above, "person acting on behalf of the Commission" includes any employee or contractor of the Commission, or employee of such contractor, to the extent that such employee or contractor of the Commission, or employee of such contractor prepares, disseminates, or provides access to, any information pursuant to his employment or contract with the Commission, or his employment with such contractor.

TECHNICAL INFORMATION DIVISION
LAWRENCE RADIATION LABORATORY
UNIVERSITY OF CALIFORNIA
BERKELEY, CALIFORNIA 94720