Submitted to Physical Review Letters

UCRL-19971
Preprint

c.2

HEAVY-ION REACTIONS AS A TECHNIQUE FOR DIRECT MASS MEASUREMENTS OF UNKNOWN Z > N NUCLEI

Joseph Cerny, C. U. Cardinal, K. P. Jackson,
D. K. Scott, and A. C. Shotter

July 1970

RECEIVED
LAWRENCE
RADIATION LABORATORY

OCT - 1 1970

LIBRARY AND
DOCUMENTS SECTI

AEC Contract No. W-7405-eng-48

TWO-WEEK LOAN COPY

This is a Library Circulating Copy which may be borrowed for two weeks. For a personal retention copy, call Tech. Info. Division, Ext. 5545

UCRL-19971

LAWRENCE RADIATION LABORATORY
UNIVERSITY of CALIFORNIA BERKELEY

c.2

DISCLAIMER

This document was prepared as an account of work sponsored by the United States Government. While this document is believed to contain correct information, neither the United States Government nor any agency thereof, nor the Regents of the University of California, nor any of their employees, makes any warranty, express or implied, or assumes any legal responsibility for the accuracy, completeness, or usefulness of any information, apparatus, product, or process disclosed, or represents that its use would not infringe privately owned rights. Reference herein to any specific commercial product, process, or service by its trade name, trademark, manufacturer, or otherwise, does not necessarily constitute or imply its endorsement, recommendation, or favoring by the United States Government or any agency thereof, or the Regents of the University of California. The views and opinions of authors expressed herein do not necessarily state or reflect those of the United States Government or any agency thereof or the Regents of the University of California.

HEAVY-ION REACTIONS AS A TECHNIQUE FOR DIRECT MASS MEASUREMENTS OF UNKNOWN Z > N NUCLEI

Joseph Cerny,* C. U. Cardinal, K. P. Jackson, D. K. Scott, and A. C. Shotter

Nuclear Physics Laboratory
University of Oxford
England

July 1970

Abstract:

The reactions $^{40}Ca(^{12}C,t)^{49}Mn$ and $^{40}Ca(^{12}C,^{3}He)^{49}Cr$ have been observed with ground state cross sections of the order of 1 μb/sr. The results for ^{49}Mn are consistent with its predicted mass excess of -37.72±0.08 MeV.

Almost nothing is known concerning the properties of Z > N nuclei above the titanium isotopes. In fact, no technique has yet been demonstrated in this region which permits even the mass measurement of the $T_Z = \frac{N - Z}{2} = -1/2$ members of the $T_Z = \pm 1/2$ mirror pairs. These masses are of importance to various theoretical mass equations (e.g. Ref. 1) and the systematics of Coulomb displacement energies. We would like to report the feasibility of heavy-ion induced reactions for this purpose. As an initial experiment, we have chosen the $^{40}Ca(^{12}C,t)^{49}Mn$ reaction as a means of studying the hitherto uncharacterized[2] nuclide ^{49}Mn; our results agree well with theoretical prediction of its mass.

Preliminary experiments had indicated a fairly low cross section for the $(^{12}C,t)$ reaction on ^{40}Ca. Due to this, simultaneous measurements of both the $^{40}Ca(^{12}C,t)^{49}Mn$ and the $^{40}Ca(^{12}C,^{3}He)^{49}Cr$ reactions leading to mirror

final states were made. Both reactions presumably proceed by the same mechanism and observation of the latter reaction--which produces known final states, but which is experimentally more difficult--was taken as a measure of the experimental reliability. Further, it was necessary to employ particle identification techniques appropriate to low cross-section measurements.[3]

A $^{12}C(4^+)$ beam with an intensity of $\approx$ 150 nA at an energy of 27.5 MeV[4] from the Oxford EN tandem Van de Graaff was used to irradiate 150 μg/cm^2 targets of Ca evaporated on 500 μg/cm^2 Au backings. Reaction products were observed in a counter telescope consisting of four semi-conductor detectors: two ΔE detectors denoted ΔE1 and ΔE2 of 60 μ and 50 μ thickness, respectively; an E detector 935 μ thick; and a rejection detector for long-range reaction products traversing the first three detectors. An Al foil 9.4 mg/cm^2 thick was placed in front of this telescope to remove elastically scattered ^{12}C ions.

Two separate identifications of each particle stopping in the system were made with the method of Ref.5. One identification (denoted M1) employed the summed pulses from the first two detectors as its ΔE signal, while the other (denoted M2) utilized the pulse from the ΔE2 detector alone as its ΔE signal. These two identification signals and the total energy signal for each event were sent via separate ADC's to a PDP-7 computer operating in a multi-parameter mode. Partial analysis of these data was possible on-line with the associated IBM disc, and all events were stored on magnetic tape for extensive off-line analysis with a PDP-10. Analysis of the relevant energy spectra after taking into account data from both identifications is necessary when investigating very low-yield reaction products arising from relatively endothermic reactions; otherwise, some events, due basically to much higher

yield reaction products but resulting in unusual energy loss in a single ΔE detector, can simulate the particles of interest and obscure their energy spectra.[3]

Figure 1 shows M2 particle identification spectra arising from ^{12}C reactions on a Ca target and its ^{12}C and ^{16}O contaminants. Limits for selection of the different particle groups were determined by using the reaction of 15 MeV ^{3}He on $^{10,11}B$ which produces a more uniform yield of the different particles (for this run the Al foil was removed). As expected, proton and ^{4}He emission dominated the composite identifier spectra from reactions induced by the ^{12}C beam. The protons are not shown in Fig. 1 (curve(b)) since their relative yield in these final data is not representative due to various thresholds required for acceptable energy loss in the ΔE and E detectors. The overall selection necessary to obtain relatively clean triton and ^{3}He energy spectra resulted in a maximum possible "loss" of 40% and 50%, respectively, of probable true events.

Figures 2(a) and 2(b) present triton and ^{3}He energy spectra arising at 16° (lab) from ^{12}C reactions on ^{40}Ca. The most energetic peaks, albeit with poor statistics, <u>shift appropriately with angle</u> between 7° and 40° (lab); kinematically compensated composite spectra for both reactions are shown in Figs. 2(c) and 2(d).

Deuteron and ^{4}He data from ^{12}C induced reactions, as well as energy spectra of all particles of interest from the $^{10,11}B + {}^{3}He$ reaction, established an energy calibration. This calibration was used to provide absolute energy determinations for <u>both</u> the $(^{12}C,t)$ and $(^{12}C,{}^{3}He)$ reactions. The <u>predicted</u> locations of the known[6] ground and low-lying states of ^{49}Cr are indicated in

Figs. 2(b) and 2(d). Although there is a high background in the ^{3}He data (discussed further below), these absolute predictions agree acceptably with the locations of the major higher energy structure at all observed angles. Completely independently, the predicted position of the ^{40}Ca(^{12}C,t)^{49}Mn(g.s.) transition is indicated in Figs. 2(a) and 2(c); this prediction is based on a ^{49}Mn mass excess of -37.72±0.08 MeV obtained from Coulomb displacement energy systematics and theoretical calculations.[7] Again, agreement with the major higher energy structure can be observed. Some of the background events above the ground states in Fig. 2 may arise from reactions on the other Ca isotopes present in this natural Ca target and some ^{4}He continuum "leak through" may still be present in the ^{3}He data. The much higher yield reactions on the light target contaminants ^{12}C and ^{16}O--which almost obscure transitions to low-lying states in the ^{40}Ca(^{12}C,^{4}He)^{48}Cr reaction--do not interfere with these spectra due to Q-value and kinematic effects. In fact, only the ^{16}O(^{12}C,t)^{25}Al reaction appears in these data significantly above the low-energy cut-off.

The general experimental conditions necessitated by the low yield resulted in the poor energy resolution of ≈ 300 keV as measured for ^{4}He groups. As such, the ^{40}Ca(^{12}C,^{3}He)^{49}Cr(g.s.,5/2-) and ^{49}Cr*(0.27 MeV,7/2-) transitions could not be resolved, though the results are consistent with a roughly comparable population of both states (in agreement with the anticipated strong influence of a $(2J_f + 1)$ statistical weighting). The (^{12}C,t) data on the mirror nucleus ^{49}Mn are also consistent with population of the predicted[7] ground state and an assumed first excited state at an equivalent excitation to that for its mirror in ^{49}Cr. [Centroid analysis of these two states--assumed equally populated--yields a mass excess for ^{49}Mn differing from that in Ref.7 by ≈ 50 keV.] Average differential cross sections to the <u>summed</u> ground and first excited states are ≈ 1.5 μb/sr (for tritons) and ≈ 3 μb/sr (for ^{3}He).

These results demonstrate the practicability of direct mass measurements of Z > N nuclei above Ti using heavy-ion induced reactions. By extension of these investigations to the use of ^{14}N and ^{16}O projectiles as well as to more exotic reactions such as $^{40}Ca(^{12}C,^{6}He)^{46}Cr$, $^{40}Ca(^{12}C,^{8}He)^{44}Cr$, etc., it should be possible to determine nuclear masses and their agreement with theoretical prediction in regions of high Coulomb energy very far from the valley of stability.

We are grateful to Professor D. H. Wilkinson and Professor K. W. Allen for the use of the Oxford EN tandem. C. U. Cardinal wishes to thank the National Research Council of Canada for a Postdoctoral Fellowship; D. K. Scott wishes to thank Balliol College, Oxford for a Junior Research Fellowship; and A. C. Shotter wishes to thank the Science Research Council for a Postdoctoral Fellowship.

FOOTNOTES AND REFERENCES

*1969-1970 John Simon Guggenheim Fellow. Permanent address: Department of Chemistry and Lawrence Radiation Laboratory, University of California, Berkeley, California, U S A.

1. I. Kelson and G. T. Garvey, Phys. Letters 23, 689 (1966).
2. There is one previous reference to ^{49}Mn known to us [H. Tyrén and P. A. Tove, Phys. Rev. 96, 773 (1954)]. These preliminary data on its half-life may in fact arise from or be dominated by the decay of ^{46}V. [See C. M. Lederer, J. M. Hollander and I. Perlman, Table of Isotopes, Sixth edition, John Wiley and Sons, 1967].
3. G. W. Butler, J. Cerny, S. W. Cosper and R. L. McGrath, Phys. Rev. 166, 1096 (1968).
4. Machine limitations made this the maximum available energy. The Coulomb barrier for the reaction on ^{40}Ca based on a radius parameter, r_o, of 1.5 fm is 26.2 MeV (lab). [See also T. D. Thomas, Phys. Rev. 116, 703 (1959)].
5. P. S. Fisher and D. K. Scott, Nucl. Instr. Methods 49, 301 (1967).
6. P. David, H. H. Duhm, R. Bock and R. Stock, Nucl. Phys. A128, 47 (1969).
7. M. Harchol, A. A. Jaffe, J. Miron, I. Unna and J. Zioni, Nucl. Phys. A90, 459 (1967).

FIGURE CAPTIONS

Fig. 1. Particle identification spectra from the 27.5 MeV ^{12}C reaction on a Ca target and its ^{12}C and ^{16}O contaminants. A counter telescope incorporating two ΔE detectors has been employed as discussed in the text. Curve (a) presents those events remaining in the M2 identification

spectrum after a gate has been set around the ^{3}He region in the M1 identification; the final ^{3}He energy spectra then arise from a selection from the data in this M2 spectrum with limits set as indicated by the arrows. Curve (b) presents a composite M2 identification spectrum obtained by adding spectra for all the particle types after appropriate limits have been set on the M1 data.

Fig. 2. (a), (b). The $^{40}Ca(^{12}C,t)^{49}Mn$ and $^{40}Ca(^{12}C,^{3}He)^{49}Cr$ energy spectra at 16°. As discussed in the text, the predicted locations of known final states in ^{49}Cr as well as the predicted location of the ^{49}Mn(g.s.) are indicated. The peak near 9.5 MeV in (a) arises at least in part from the $^{16}O(^{12}C,t)^{25}Al$ reaction.

(c), (d). Composite energy spectra for the $^{40}Ca(^{12}C,t)^{49}Mn$ and $^{40}Ca(^{12}C,^{3}He)^{49}Cr$ reactions, as well as for the contaminant reaction $^{16}O(^{12}C,t)^{25}Al$, obtained from kinematically correcting to 7° data taken at angles from 7° to 40°. The lower part of the triton spectrum is kinematically corrected appropriate to reactions on ^{16}O while the upper part is corrected for reactions on ^{40}Ca. Transitions to the various final states are indicated as in 2(a), (b).

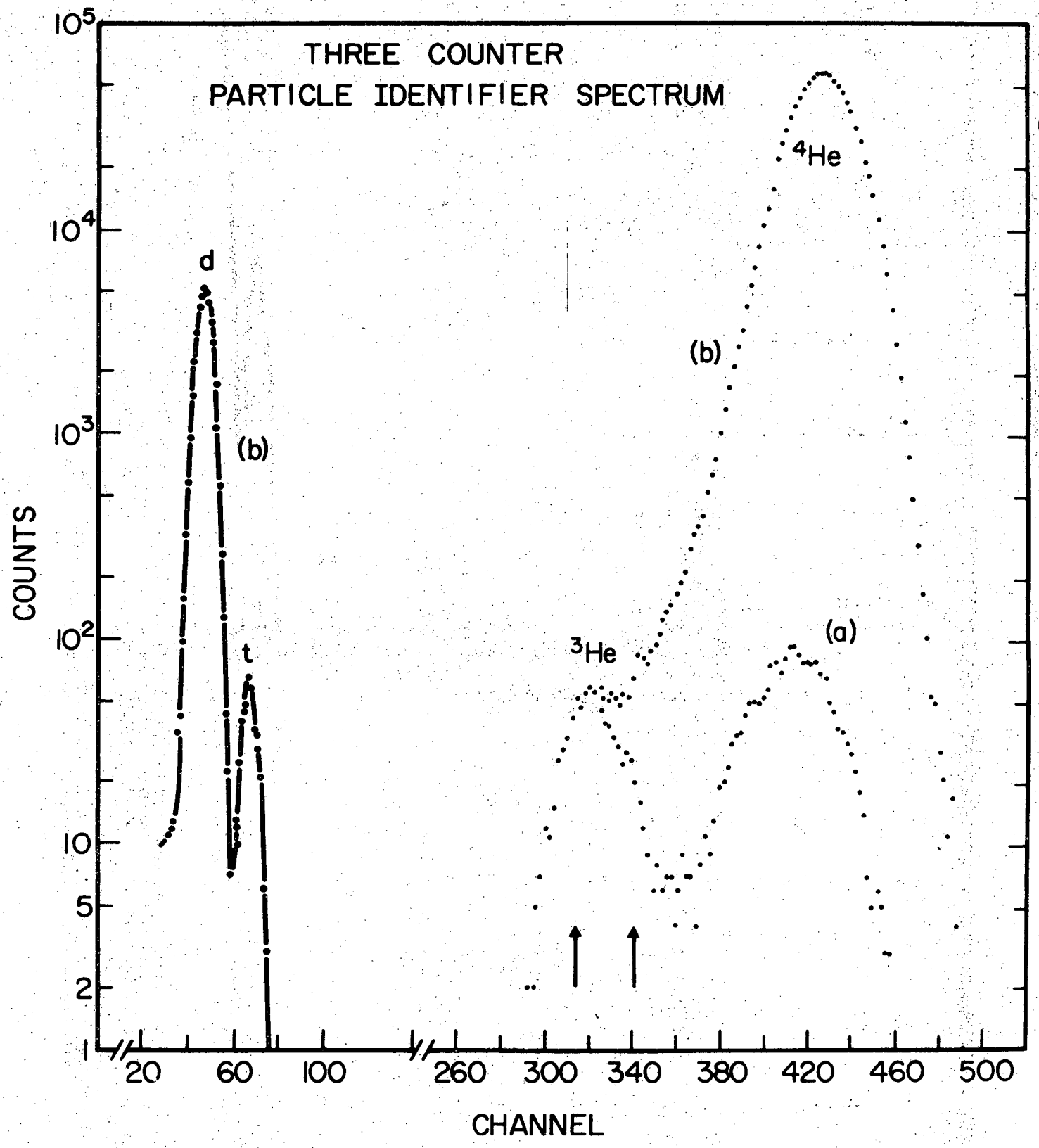
THREE COUNTER
PARTICLE IDENTIFIER SPECTRUM
COUNTS
CHANNEL
d
(b)
t
^{4}He
(b)
^{3}He
(a)
10^5
10^4
10^3
10^2
10
5
2
1
20
60
100
260
300
340
380
420
460
500

Fig. 1

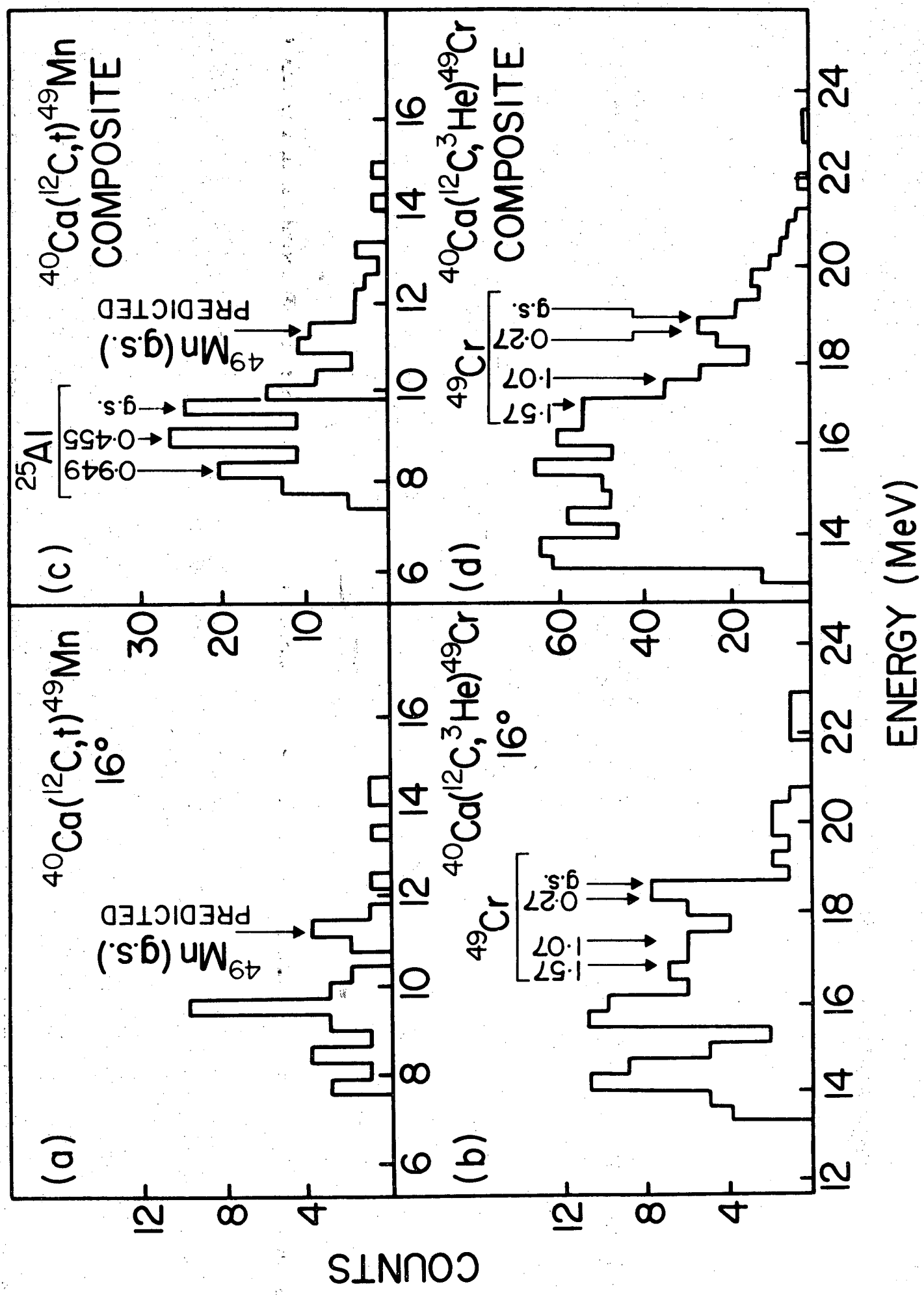
(a)
$^{40}Ca(^{12}C,t)^{49}Mn$
16°
^{49}Mn (g.s.)
PREDICTED
(b)
$^{40}Ca(^{12}C,^{3}He)^{49}Cr$
16°
^{49}Cr
1.57
1.07
0.27
g.s.
(c)
$^{40}Ca(^{12}C,t)^{49}Mn$
COMPOSITE
^{25}Al
0.949
0.455
g.s.
^{49}Mn (g.s.)
PREDICTED
(d)
$^{40}Ca(^{12}C,^{3}He)^{49}Cr$
COMPOSITE
^{49}Cr
1.57
1.07
0.27
g.s.
COUNTS
ENERGY (MeV)

Fig. 2

LEGAL NOTICE

This report was prepared as an account of Government sponsored work. Neither the United States, nor the Commission, nor any person acting on behalf of the Commission:

A. Makes any warranty or representation, expressed or implied, with respect to the accuracy, completeness, or usefulness of the information contained in this report, or that the use of any information, apparatus, method, or process disclosed in this report may not infringe privately owned rights; or

B. Assumes any liabilities with respect to the use of, or for damages resulting from the use of any information, apparatus, method, or process disclosed in this report.

As used in the above, "person acting on behalf of the Commission" includes any employee or contractor of the Commission, or employee of such contractor, to the extent that such employee or contractor of the Commission, or employee of such contractor prepares, disseminates, or provides access to, any information pursuant to his employment or contract with the Commission, or his employment with such contractor.

TECHNICAL INFORMATION DIVISION
LAWRENCE RADIATION LABORATORY
UNIVERSITY OF CALIFORNIA
BERKELEY, CALIFORNIA 94720