Submitted to IEEE Transactions on
Nuclear Science

UCRL-20151
Preprint

PULSED FEEDBACK TECHNIQUES FOR SEMICONDUCTORS DETECTOR RADIATION SPECTROMETERS

D. A. Landis, F. S. Goulding, R. H. Pehl,
and J. T. Walton

November 1970

AEC Contract No. W-7405-eng-48

TWO-WEEK LOAN COPY

This is a Library Circulating Copy which may be borrowed for two weeks. For a personal retention copy, call Tech. Info. Division, Ext. 5545

LAWRENCE RADIATION LABORATORY
UNIVERSITY of CALIFORNIA BERKELEY

UCRL-20151 c.2

DISCLAIMER

This document was prepared as an account of work sponsored by the United States Government. While this document is believed to contain correct information, neither the United States Government nor any agency thereof, nor the Regents of the University of California, nor any of their employees, makes any warranty, express or implied, or assumes any legal responsibility for the accuracy, completeness, or usefulness of any information, apparatus, product, or process disclosed, or represents that its use would not infringe privately owned rights. Reference herein to any specific commercial product, process, or service by its trade name, trademark, manufacturer, or otherwise, does not necessarily constitute or imply its endorsement, recommendation, or favoring by the United States Government or any agency thereof, or the Regents of the University of California. The views and opinions of authors expressed herein do not necessarily state or reflect those of the United States Government or any agency thereof or the Regents of the University of California.

PULSED FEEDBACK TECHNIQUES FOR SEMICONDUCTOR DETECTOR RADIATION SPECTROMETERS

D. A. Landis, F. S. Goulding, R. H. Pehl and J. T. Walton

Lawrence Radiation Laboratory
University of California
Berkeley, California

SUMMARY

Methods of applying pulsed-charge feedback to the charge-sensitive preamplifiers used with semiconductor detectors are discussed. All have in common the accumulation of radiation-induced charge pulses on a feedback capacitor to produce a voltage ramp at the output of the feedback stage, which is reset at an appropriate point by pulsing a charge feedback path. Advantages of pulsed feedback over the conventional dc feedback techniques are discussed, together with the precautions required to reduce the effect of the large reset pulse on the later electronics.

The application of pulsed-light feedback to low energy X-ray spectrometers is discussed and results are presented. We also discuss some aspects of this system that tend to limit its high-rate performance. A brief account of the use of a transistor current-switch feedback system to reduce overload problems in high-energy γ-ray spectrometers is also given.

DC FEEDBACK SYSTEMS

The charge-sensitive capacitive feedback loop shown in Fig. 1a, with a parallel resistive-feedback path (Fig. 1b), is commonly used with semiconductor detectors. The virtues of a charge-sensitive configuration compared with the older voltage-sensitive circuit include relative insensitivity of the output signal to capacity changes in the detector, stabilization of output signal against changes in the elements within the loop, and ease of testing by application of a voltage step via a small capacitor to the virtual ground point at the input of the preamplifier.

A penalty in the ratio of signal to noise results from the feedback capacity C_F increasing the total capacity in the input circuit, but the degradation can be made insignificant by using a relatively small capacitor. The parallel resistive feedback path (R_F) serves two purposes; it provides dc feedback to stabilize the operating point of the elements in the feedback loop, and acts as a path for charge deposited on C_F to leak away. The decay time-constant of the feedback path is nominally $R_F C_F$, so charge impulses from the detector produce voltage steps at the output of the preamplifier that decay with this time constant.

It has also become common in recent years to dc connect the detector to the preamplifier, thereby keeping stray capacities at the input to a minimum. This method has also eliminated damage problems in the FET input stage resulting from voltage breakdown in the coupling capacitor. With dc coupling, the detector leakage current flows into the input of the preamplifier producing a voltage drop across the feedback resistor--which can be used as a convenient monitor of detector leakage current. When the detector is in a high radiation field, insufficient time is available between the individual radiation-induced pulses for the voltage steps across C_F to decay, so voltage is present across R_F continuously.

Fundamental noise sources include the FET channel noise, detector leakage current noise, and thermal noise of the feedback resistor. Also an additional source of noise (current noise) may be expected to be present in the high-valued feedback resistor when the voltage across it exceeds thermal fluctuation values.* This becomes important only at high counting rates where appreciable average currents flow in the feedback resistor.

The feedback resistor is a source of many additional problems. Due to its large physical size, a substantial amount of capacity is added to ground on the input of the preamplifier, thereby degrading the signal-to-noise ratio. Furthermore, high-valued resistors rarely behave as well as would be indicated by fundamental considerations. They act as sources of noise far larger than would be expected theoretically, and their value changes both as a function of voltage and frequency in the range of interest. The poor frequency behaviour of R_F produces a complex decay in the voltage across C_F that is not amenable to correction by pole-zero cancellation techniques.[2] This is a major factor in the degradation of high-resolution systems at high counting rates.

The optoelectronic feedback system[3,4] was devised to overcome the frequency sensitivity of high-valued resistors. As shown in Fig. 1c, the feedback resistor is replaced by a light-emitting diode (LED) feeding light into a photodiode connected to the input of the preamplifier. In practice, the gate junction of the FET is used as

---

* This fact is not usually taken into account in noise calculations, and is difficult to explain in detail for high-valued resistors of the film type. However, it is calculable for photoconductors and semiconductors.[1]

the photodiode, thereby avoiding any degradation of resolution due to the photodiode leakage current and its capacity.† The combination of LED and photodiode behaves as a pure resistor up to quite high frequencies, but nonlinearity in the input current vs light output characteristic of the LED causes the effective value of the feedback resistor to change in sympathy with the average voltage level at the output of the preamplifier. The feedback time-constant therefore changes, pole-zero cancellation is made ineffective and the high counting-rate performance is degraded. Furthermore, random fluctuations in the current in the photodiode* act as a noise source that becomes significant at high counting rates.

Therefore, despite the advantages of the optoelectronic system at relatively low counting rates--where the resolution is much improved compared with resistive feedback--the poor counting rate behaviour is a major drawback. For this reason, we must use pulsed-feedback methods as described in the following sections.

PULSED-FEEDBACK SYSTEMS

A number of workers have appreciated that the noise and counting-rate problems associated with the dc feedback path can be eliminated by using a pulsed feedback system similar to that shown in Fig. 1d. Here a measurement of the output level of the preamplifier (or of a

† This involves removing the FET from its conventional package. We thereby, incidentally, remove an important practical source of noise in the FET header.[5]

* The average current in this photodiode must equal the total detector current--leakage plus radiation-induced pulses--and must exhibit normal statistical fluctuations.

later point in the amplifier) is made, and when the voltage excursion at this point exceeds prescribed limits, charge is fed to the input point to restore the output to its fiducal level.

In the example shown in Fig. 1, the current flow in the detector circuit causes the output to move in a positive direction. When the output voltage crosses an upper discriminator level, the charge pulser is turned on to feed charge into the input, thereby driving the output point in a negative direction. The charge pulser is turned off when the output reaches a lower discriminator level. During the recharge operation, analysis of the pulses in the later electronics is stopped, thereby imposing a dead time--which can be made suitably small by recharging quickly.

Variants in this basic scheme are possible. For example, the recharge pulses can be initiated at fixed times, or can be generated at a variable rate to maintain the average preamplifier voltage at a reasonable value, or may even be applied following each radiation-induced pulse. Also, for the opposite polarity of detector connection--or if the FET drain-gate leakage is excessive--a parallel reverse-polarity feedback path may be substituted for, or added to that in Fig. 1d. All systems have three common features:

(i) The purpose of the pulsed feedback path is to maintain the stages within the feedback loop in their normal operating range. The circuit design must be such as to maintain constant gain over this operating range.

(ii) After differentiation of the preamplifier output in the main amplifier, the integrated area of radiation-induced pulses must be equal to the area of the reverse-polarity pulses produced by the recharge operation. Thus, if a completely dc coupled system is used after the differentiator, no baseline shift occurs.* However, detector leakage current will produce a small shift in the baseline in the same direction as radiation-induced pulses.

---

* This is true for normal RC differentiation but not if a time-variant RC differentiator is used.

(iii) The charge reset path is operative only for brief periods of time, and during these periods the later signal processing system can be made insensitive.

Several workers have integrated pulse feedback into overall signal processing and digitizing systems,[6,7] but for the purpose of this paper we will restrict our attention to pulsed-feedback applied around the preamplifier, followed by a conventional amplifier containing a time-invariant filter. The results quoted later in the paper are given for filters consisting of a single RC differentiator and multiple RC integrators (or the equivalent active integrators) that produce nearly Gaussian-shaped pulses. This approach is justified by the following arguments:

(i) Existing amplifiers can often be used or modified for use with a pulsed-feedback preamplifier.[8]

(ii) At the present time, no improvement in performance in practical high-resolution spectrometers has been demonstrated using time-variant systems or the integrated systems such as that described in Ref. #6.

(iii) Experimenters are familiar with the general operational blocks used in existing systems, and with adjustment of the controls in these systems. Pulsed-feedback in the preamplifier alone does not radically alter the basic mode of operation of a system.

The most important single choice to be made in a pulsed-feedback system is that of the technique used to inject the resetting charge into the input point of the preamplifier. The ideal recharging element would:

(i) Introduce no additional noise in the system.

(ii) Reset the system in a very short time.

(iii) Produce no additional signals due to the switching operations, and, in particular:

(iv) Produce no long-term aftereffects to interfere with real signals following the recharge period.

(v) Operate satisfactorily at liquid nitrogen temperature to be compatible with the cooled detector-FET systems used in high-resolution spectroscopy.

We will now survey various recharging methods in the light of these requirements.

A. Diode current-switching (Fig. 2)

The simplest recharging schemes involve sensing when the preamplifier output rises above its upper limit, then injecting current in the appropriate direction to the input of the preamplifier until the output falls to its lower limit. The limits may be determined by a single discriminator with suitable backlash or by two discriminators. The diode current switch shown in Fig. 2* is one method of switching current in the input circuit; the positive pulse, generated by suitable circuitry during the required recharge period, transfers the current I, normally flowing in D2, into diode D1. This causes the voltage at the preamplifier output to fall as I recharges C_F.

In this circuit, additional noise results from the leakage current in D1, and some degradation in signal-noise ratio of the preamplifier is caused by the capacity of diode D1 added to the input capacity of the preamplifier. For high-capacity detector systems, where the detector leakage is appreciable, the degradation of signal-noise resulting from D1 is negligible compared to that caused by a feedback resistor in a standard feedback system. The leakage current of a signal diode can be

---

* Note that the reverse polarity circuit can be used for detectors connected in the reverse direction. With a few exceptions, as noted in the text, this is true for all recharge systems.

very small (< 10^{-13}A) when it is operated at liquid nitrogen temperature, and diodes exhibiting capacities less than 1 pF are readily available.

Examining the output waveform in Fig. 2, we see some of the problems with this arrangement. A pulse of several volts amplitude must be supplied to D2 to ensure switching, as the dc level V_A at the preamplifier input is dependent on the particular FET employed at the input to the preamplifier. While an adjustable baseline for the recharge pulse could be provided to permit operation with a smaller voltage pulse, we prefer to avoid preset adjustments where possible. The effect of the large input pulse, feeding through the capacity of diode D1, appears in the two edges (a) and (c) in the output waveform. It is easy to make the slope (b) suitably fast with this circuit, but charge storage in diode D1 results in the slow recovery (d). Even fast signal diodes, in which the carrier lifetime in the bulk semiconductor is only a few nanoseconds, exhibit slow recovery when very small amounts of charge are detectable. This probably results from charge storage in slow surface states that are capable of releasing charge for many milliseconds. Following differentiation of the preamplifier output signal in the main amplifier, the slow recovery after a recharge pulse produces a baseline offset which distorts real signals. Resolution is seriously degraded by this effect at high counting rates, where the recharge rate increases.

B. Transistor current-switching (Fig. 3)

This circuit behaves in the same general way as diode current-switching but a number of advantages are realized. Again, a diode (the collector-base diode of Q1) is added to the input circuit with some consequent degradation in the signal-noise ratio, but this is tolerable in many applications. Capacities less than 1 pF, and very

small leakage currents (at liquid nitrogen temperature) can be realized. However, since switching is now accomplished at the emitter of a transistor, a very small waveform is adequate, and this couples to the collector only through very small capacity. Consequently, the edges (a) and (c) in the output waveform are almost non-existent. Furthermore, charge injected by the emitter into surface states flows out via the base-emitter path and produces no effect in the collector circuit. Consequently, virtually no long-term recovery occurs in the preamplifier waveform after the recharge period.

A similar circuit has been used by Radeka[9], but with an FET instead of the transistor. We have chosen to examine the use of transistors for this purpose as they permit operation with a much smaller switching waveform, and therefore less feedthrough to the output than would be encountered using an FET. NPN and PNP transistors are available that exhibit adequate current gains for this purpose even at liquid nitrogen temperature.

C. Diode pump (Fig. 4)

Here the positive edge of the recharge waveform dumps charge from C_1 into C_F via diode D1, and C_1 is recharged via diode D2 on the negative edge. A small current flows in R to maintain D2 in conduction except during the recharge pulse. Diode D1 is maintained out of conduction, except during the recharge period, by making the potential V_B more negative than the input dc level V_A. The step in output voltage that occurs on recharge is determined by the values of C_1 and C_F, and by the circuit voltages, so no lower level discriminator is needed in this circuit.

The same basic difficulties arise with this circuit as those that occur with the diode current-switch in that capacity feedthrough of the recharge waveform, and charge storage in diode D1, produce the same effects.

D. Charge pump via detector capacity (Fig.5)

This scheme, proposed by Radeka[10], operates in a similar way to the diode pump, but requiring no additional components in the input circuit, involves no obvious degradation of resolution. The detector capacity C_D acts as the pump capacitor, which is charged via the FET gate-source diode on the positive edge of the recharge waveform, then discharged into the feedback capacitor C_F on the negative edge. During the recharge pulse the preamplifier is driven into saturation (output negative).

While this method possesses the advantage of adding no components to the input circuit, it suffers from a number of disadvantages. First, if a proven type of FET is used as the input element of the preamplifier (all presently-available low-noise types are n-channel), the system can deal only with the polarity of detector connection shown in Fig. 5. This is unfortunate as the p-side of totally depleted lithium-drifted detectors is the entry window for low-energy X rays, and must face the entrance window of the detector holder. Consequently a high capacity exists to ground in nearly all practical cases, and with this detector connection, the capacity appears at the input to the preamplifier, causing a degradation in the signal-to-noise ratio. Second, the large negative overload pulse places an unusually severe burden on the later circuitry although the use of a very short reset pulse reduces this burden. Third, we must expect recovery of the preamplifier elements (driven into saturation), and the FET gate diode (driven into forward conduction), to produce slow decay components similar to those described for the earlier systems.

E. Pulsed-light feedback to a photodiode (Fig. 6)

This scheme was used by Kandiah[6], and is similar to dc opto-electronic feedback[3,4] except that the feedback path is pulsed on only during the recharge period. Like the diode current-switch, and the diode-pump, the system signal-to-noise ratio is degraded by the effects of the photodiode connected to the input circuit. If this diode is maintained in a reverse-biased condition, and if the whole bulk of the diode consisted of depleted material, stored charge problems, with the consequent slow decay after recharge, would be negligible. The photodiodes tested by us do not meet these requirements, and slow decay after recharge is a very serious problem. This must be attributed to charge diffusion from undepleted material into the depletion layer, and to charge storage in surface states.

F. Pulsed-light feedback to the input FET (Fig. 7)

This is similar to the previous case except that the gate junction of the FET is used as the photodiode. Like the scheme shown in Fig. 5, no components are added to the input circuit, and the best ratio of signal-to-noise is preserved. Moreover, measurements have shown that the gate junction of typical FET's exhibit only very small charge-storage effects compared with standard photodiodes.

As indicated in this brief survey, the pulsed-light feedback system in Fig. 7 offers the best promise for very high resolution work. In the following section we describe details of a system of this type and illustrate its performance. As the available light coupling in such systems is inadequate to recharge the feedback capacitor at a rate suitable for high-energy gamma-ray spectrometers used in pulsed-machine applications, we have also investigated the transistor current-switch (Fig. 3) for these purposes. The penalty in noise due to the transistor collector capacity, and its leakage, is tolerable as large detectors are used in these applications. Some aspects of the transistor current-switch reset system are discussed in the final section of this paper.

PULSED-LIGHT FEEDBACK SYSTEM

Figures 8 and 9 respectively are block diagrams of the preamplifier and amplifier used in an low-energy photon spectrometer employing pulsed-light feedback. The amplifier unit, containing a pile-up rejector and a biased amplifier, performs amplification and signal processing operations, and provides a 2 μs wide output pulse suitable for a pulse-height analyzer. Most of the functions are performed using linear integrated circuits, allowing the whole amplifier unit, in all its complexity, to be contained within a standard double-width NIM module.

The preamplifier operation is essentially as described in the earlier part of this paper except that a small delay is provided after the firing of the Schmitt output-level discriminator, before the feedback light is turned on. This allows the Schmitt trigger reset waveform to be used to inhibit certain functions in the later electronics prior to their receiving the reverse-polarity effects of the reset part of the preamplifier output. A suitable backlash is designed into the Schmitt discriminator to define the difference between the upper and lower limits for the voltage excursion at the preamplifier output. The Schmitt trigger is also used to drive an indicator lamp; its flashing-rate serves as an useful measure of detector leakage current in the absence of radiation, and as an indicator of radiation intensity at other times.

The design of the circuits in the preamplifier is such as to maintain high loop gain over the whole operating range of the output waveform, despite a very low value (.15 pF) of C_F. This is an important requirement to prevent gain changes as the output level moves.

The main signal path in the amplifier unit passes through the following functional elements:

a) The linear amplifier--containing a single RC differentiator and three active integrators that produce an almost symmetrical positive Gaussian-shaped pulse at the output. Gain switching is accomplished by

ganged controls at three points in the amplifier chain to maintain the main amplifier noise contribution low compared with preamplifier noise, and also to achieve adequate overload performance under all conditions.

Apart from the single RC differentiator, the amplifier is dc coupled to avoid the high-rate effects associated with multiple differentiators. Shaping time-constants can be changed by a plug-in card.

b) Baseline restorer--this is necessary to remove dc drift effects at the amplifier output. As pointed out earlier, the area balance of radiation-induced pulses and reset pulses is perfect if the detector leakage is very small, and a dc restorer is not a fundamental necessity in this type of system.

The particular restorer used in the unit is capable of establishing a good baseline even when signals are present almost all the time. To avoid the baseline being established on the negative reset pulses, the action of the restorer is inhibited by the reset waveform from the Schmitt discriminator in the preamplifier. After the dc restorer, the complete signal path is dc coupled through the remainder of the unit.

c) Pulse stretcher (and accompanying discriminator)--this stretches the peak level of an input pulse only if the associated discriminator is fired, and the stretched level is retained until the discriminator resets. For the discriminator to fire, and remain set, the signal into the stretcher must cross the "bias-cut" level, and no pile-up of signal pulses must have been detected. The discriminator normally resets when the signal level falls below a low predetermined level thereby terminating the stretching action.

d) Differential-input linear gate--after the stretched signal achieves its peak, the difference between it and the bias-cut level is sampled for 2 μs to produce a square output pulse.

e) Output amplifier--the signal from the linear gate, which represents the difference between the signal amplitude and bias-cut, is amplified by a variable factor from 1 to 8, and fed to an output driver capable of driving positive 10 volt pulses into a 125 Ω cable. This signal is suitable for processing by a pulse-height analyzer.

In addition to the elements in the main signal path, the unit also contains the following items:

f) A variable-gain fast amplifier in which the signals are differentiated by a clipping line 100 ns long then discriminated at a fixed level. The gain can be set to eliminate triggering of the discriminator on noise.

g) A pile-up rejector that inspects the fast discriminator output to sense pulse pile-up in the main signal channel. The inspection time of the pile-up circuitry is changed by the same plug-in board as is used to change the amplifier pulse-shaping circuits.

h) Inhibit circuit--this circuit accepts the reset waveform from the Schmitt trigger in the preamplifier, and produces an waveform to inhibit the action of the pile-up rejector and baseline-restorer. The inhibit period is extended for a suitable time after the preamplifier reset period to allow recovery of the system from any long-term after-effects of the reset (to be discussed later).

At low counting rates, the performance of this system is only slightly better than that of dc-coupled optoelectronic feedback system. An example of this performance is shown in Fig. 10. This shows the excellent separation of Mg, Al and Si Kα X rays, and demonstrates the electronic resolution possible with the system. A Gaussian pulse-shape peaking in about 50 μs was used in these measurements.

As expected, the main advantages of the system are exhibited at high counting rates. To demonstrate the high-rate performance we have chosen a number of examples:

(i) Figure 11 shows the variation of energy resolution with counting rate measured on Mn X rays produced by an ^{55}Fe source. Gaussian pulse shaping was used with various peaking times as indicated on the curves. Figure 11 also shows the output pulse-rate variation; the difference between it and the input counting rate represents those pulses rejected by the pile-up rejector.

(ii) Figure 12 shows a spectrum taken with combined ^{241}Am and ^{55}Fe sources, at a total input counting rate of 22,000 counts per second. The Mn X-ray resolution is somewhat better than 200 eV in this spectrum and the Np X rays demonstrate outstanding resolution despite the high-counting rate. This spectrum was taken using a Gaussian peaking time of 17 μs, and the analyzed rate was 6,500 counts per second.

(iii) Figure 13 is an illustration of the performance at very high input-counting rates (260,000 per second) from ^{55}Fe, with and without the use of the pile-up rejector. In this case the Gaussian peak was at 4.5 μs. The output rate when using the pile-up rejector was 4,000 counts per second, while it was 32,000 counts per second with no pile-up rejector (the action of the stretcher discriminator is responsible for lost counts in this case). The accidental double, triple and even quadruple coincidences between the Mn-X rays, within the discrimination time of the pile-up rejector (~250 ns), are clearly seen when the pile-up rejector is operating, but these features are almost hidden by background when the pile-up rejector is not used. Moreover, the primary peak, and even secondary pile-up peaks, exhibit very good resolution at this high-counting rate when the pile-up rejector is employed. It is interesting to note that even the very weak silicon K X-ray escape peak is clearly visible in the pile-up as well as in the singles spectra.

Outstanding high counting-rate performance is of great importance in the use of X-ray fluorescence spectrometers with electron microscopes, and for other electron-beam excitation applications. The system on which our present results were obtained was designed for use with an

electron microscope, and a similar system is used in the very low-energy X-ray work reported by Jaklevic.[10]

While the performance demonstrated here is satisfying, we would now like to direct attention toward some of the problems and peripheral observations made in this work which may affect the ultimate performance capability of the system. The major limitation arises from long-term aftereffects of light pulsing. Figure 14 illustrates the baseline recovery following light-pulsing in a system using a silicon detector. These results are largely explained in terms of a light-leak from the light (which is intended only to illuminate the FET) onto the surface of the detector where it stores charge in surface states. This charge then produces a short-term increase in the detector leakage current. The recovery time constants are substantially shorter for germanium detectors than for silicon, but the amplitude of effect is much larger (as would be expected). Storage times are long enough for a substantial fraction of the stored charge to remain present from one reset pulse to the next. Consequently, a counting-rate dependent equilibrium surface charge is produced, in addition to the transient effect immediately following each reset pulse. This increases the detector leakage, the increase depending on the counting-rate in the detector.

To illustrate the magnitude of the time-constants involved in these processes, two tests were performed on a silicon detector system:

a) A light directed at the surface of a detector was turned on for various times. The total charge-flow through the detector was measured by determining the number of reset pulses produced in the pre-amplifier. The light was suddenly turned off, and the detector leakage was determined thereafter using the reset pulse-rate as a measure of the leakage current.

b) The same test was performed by moving a radiation source up to the detector, then suddenly removing it. We believe that the effect in this case is largely due to light leaking from the FET-lamp enclosure onto the surface of the detector, although it is possible that some of radiation-induced charge from the bulk of the detector may become trapped in surface states.

Figure 15 shows the results of these tests. We see that the recovery is not a simple exponential decay but major time constants of over five minutes (!) are present. We also observe that the magnitude of the effect is non-linear, indicating some saturation of surface states. Furthermore, almost the same recovery shape occurs in the "source-induced" case as in the "light-induced" case--although the effect is some 20 times smaller (this factor presumably results from poor coupling of the FET lamp to the detector surface).

These tests indicate the importance of eliminating light coupling from the pulsed-light to the detector surface. While this sounds relatively easy to achieve, our experience shows that extreme measures are necessary to reduce coupling to a sufficiently low level to achieve the best system performance. Marked deterioration in resolution is observed at high counting rates in systems where light leakage to the detector is present. Some improvement can be realized if the later electronics is inhibited for a long period following each reset pulse, but this is a very undesirable expedient since valuable counting time is thereby lost. When light coupling to the detector is eliminated, a relatively small aftereffect can be observed in the gate junction photodiode. This effect decays in much less than 50 μs, and has been no problem in our work. Ultimately, however, it may prove to be a limiting factor in the high-rate performance of these systems.

TRANSISTOR CURRENT-SWITCH FEEDBACK

Our first interest in the dc optoelectronic feedback system, and in the pulsed-light system, was stimulated by the deficiencies of very high-valued resistors used in low-energy X-ray systems. Here, using the conventional resistor feedback, very large-resistor values (>> 1000 MΩ) were necessary to minimize thermal noise in the resistor. The poor frequency behaviour of these resistors appeared to be exaggerated compared with that of lower values, with consequent severe degradation in high-rate performance of these systems. Furthermore, in very high-resolution systems, the various noise contributions of the resistor became completely intolerable. These considerations led to the light-feedback methods.

These factors seemed less important in high-energy systems using large detectors. Here the high detector capacity (> 10 pF) and leakage ($\sim 10^{-10}$A) made the use of somewhat lower value($\sim$200 MΩ) feedback resistors possible, and these resistors were less troublesome than those of higher value. Also, the charge-production statistics in the detector form the major limitation to resolution at higher energies, and degradation in electronic noise is less important than in low-energy systems.

Despite these considerations we recognized that the resistor feedback caused degradation in resolution, particularly at lower energies, and also worsened performance at high counting rates. Moreover, a number of applications of these detectors involved either very large overload pulses (e.g. observing mesic X rays in the presence of pions producing ~50 MeV signals), or pulsed operation (e.g. a pulsed-beam striking a target to produce ~10^5 c/s of 500 keV gammas, at the end of which immediate observation of low-rate gammas is required). In these cases, the preamplifier was driven far into saturation, and the slow recovery of the feedback $R_F C_F$ combination resulted in long dead-times following overload. Pulsed-feedback schemes clearly offer very significant advantages in these respects since the preamplifier can be maintained in its normal operating range, and all charge stored on C_F can be removed immediately after overload.

The choice of a particular pulsed-feedback method for any application of this type requires consideration of the particular situation. For relatively small detectors with a mixture of overload and normal pulses at relatively low rates (a case actually encountered in observing kaonic X rays < 100 keV), the pulsed-light feedback method described in the previous section is very satisfactory. However, its ability to handle large amounts of average detector current is limited by the small light coupling that can be achieved in practice.* Where the light-feedback system cannot cope with the average detector current, the transistor current-switch feedback method (or possibly the equivalent FET system) provides the best solution.

Figure 3 shows the arrangement employed in a transistor current-switch feedback preamplifier. For this technique to operate, it is clear that a significant fraction of the current fed to the emitter of the feedback transistor must reach its collector even though the transistor is operated at liquid nitrogen temperature. We have tested a number of types of transistors that exhibit low collector capacitance and low leakage to determine the current-gain (α) at low temperatures. The following types of transistor gave satisfactory yields for this application:

NPN - 2N3932 (10% of our samples exhibit $\alpha > 0.5$)
PNP - 2N3307 (20% of our samples exhibit $\alpha > 0.5$)

---

* Using GaP light sources (i.e. red light) directed onto 2N4416 FET's, a pulse-recharge current of about 10^{-8}A can conveniently be supplied by the drain-gate diode. This is almost equal to the average current in a germanium detector irradiated by 500 keV gammas at a rate of 5×10^5 per second. Therefore, under these conditions, the feedback light would turn on continuously.

Although the yields are low, it seems reasonable to select units for this specialized application; also the operating temperature can be increased somewhat if necessary to increase yields.

These systems find their main application in pulsed-beam experiments, and represent one important example where a time-variant filter gives improved performance. To prevent the amplifier differentiator-capacitor retaining charge after the end of the beam pulse, the resistor in the RC differentiator may be shorted out by an FET-switch which is opened immediately after the end of the beam pulse. Just prior to this operation, the preamplifier is reset (in addition to its constant cycling during the beam pulse) so the charge accumulated on the feedback capacitor from the many gammas detected during the beam pulse is removed. Gamma rays produced by radioactive decay in the target can then be observed with good energy-resolution within a few microseconds of the end of the beam pulse.

ACKNOWLEDGEMENTS

We thank R. Cordi, A. Jue, D. Malone, W. Searles and H. Sommer for their work in fabricating the detectors, mechanical parts, and electronics used in these experiments. This work was performed as part of the program of the Nuclear Chemistry Division of the Lawrence Radiation Laboratory, Berkeley and was supported by the U. S. Atomic Energy Commission, Contract No. W-7405-eng-48.

REFERENCES

1. A. Rose, Photoelectronic Materials and Devices, ed. S. Larach, 222, (Van Nostrand 1965).
2. C. H. Nowlin, J. L. Blankenship, Rev. Sci. Instr., 36, 1830 (1965).
3. F. S. Goulding, J. Walton, D. Malone, Nucl. Instr. & Methods, 71, 273 (1969).
4. F. S. Goulding, J. T. Walton, R. H. Pehl, IEEE Trans. Nucl. Sci., NS-17, No. 1, 218 (1970).
5. H. E. Kern, J. M. McKenzie, IEEE Trans. Nucl. Sci., NS-17, No. 1, 260 (1970).
6. K. Kandiah, A. Stirling, Semiconductor Nuclear-Particle Detectors and Circuits, National Academy of Sciences Publication 15943, 495 (1969).
7. W. Goldsworthy, private communication.
8. D. A. Landis, F. S. Goulding, J. M. Jaklevic, Performance of a pulsed-light feedback preamplifier for semiconductor detector X-ray spectrometers, UCRL-19796 (1970). To be published in Nucl. Instr. & Methods.
9. V. Radeka, IEEE Trans. Nucl. Sci., NS-17, No. 1, 269 (1970).
10. V. Radeka, IEEE Trans. Nucl. Sci., NS-17, No. 3, 433 (1970).
11. J. M. Jaklevic, F. S. Goulding, Detection of low-energy X rays with Si(Li) detectors, paper to be presented at the 1970 Nuclear Science Symposium, and to be published in the IEEE Trans. Nucl. Sci., Feb. 1971.

FIGURE CAPTIONS

Fig. 1. Generalized feedback configurations used in charge-sensitive preamplifiers.

Fig. 2. Diode current-switch feedback circuit.

Fig. 3. Transistor current-switch feedback circuit.

Fig. 4. Diode-pump feedback.

Fig. 5. Charge-pump via detector capacity.

Fig. 6. Pulsed-light feedback via a photodiode.

Fig. 7. Pulsed-light feedback via FET drain-gate diode.

Fig. 8. Pulsed-light feedback preamplifier block diagram.

Fig. 9. Pulsed-light feedback amplifier system block diagram.

Fig. 10. X-ray spectrum of Mg, Al, Si at low-counting rates.

Fig. 11. Showing the effect of counting rate on resolution on Mn X rays for different Gaussian peaking times. The output counting rate is also shown.

Fig. 12. Spectrum of ^{241}Am and ^{55}Fe source at an input counting rate of 22,000 cps.

Fig. 13. Illustrating the effect of pile-up rejection on a Mn X-ray spectrum taken at an input rate of 260,000 counts per second.

Fig. 14. The aftereffects of light pulses seen at the amplifier output in a silicon detector system.

Fig. 15. Showing the decay of a silicon detector leakage current after the detector is exposed to light and radiation.

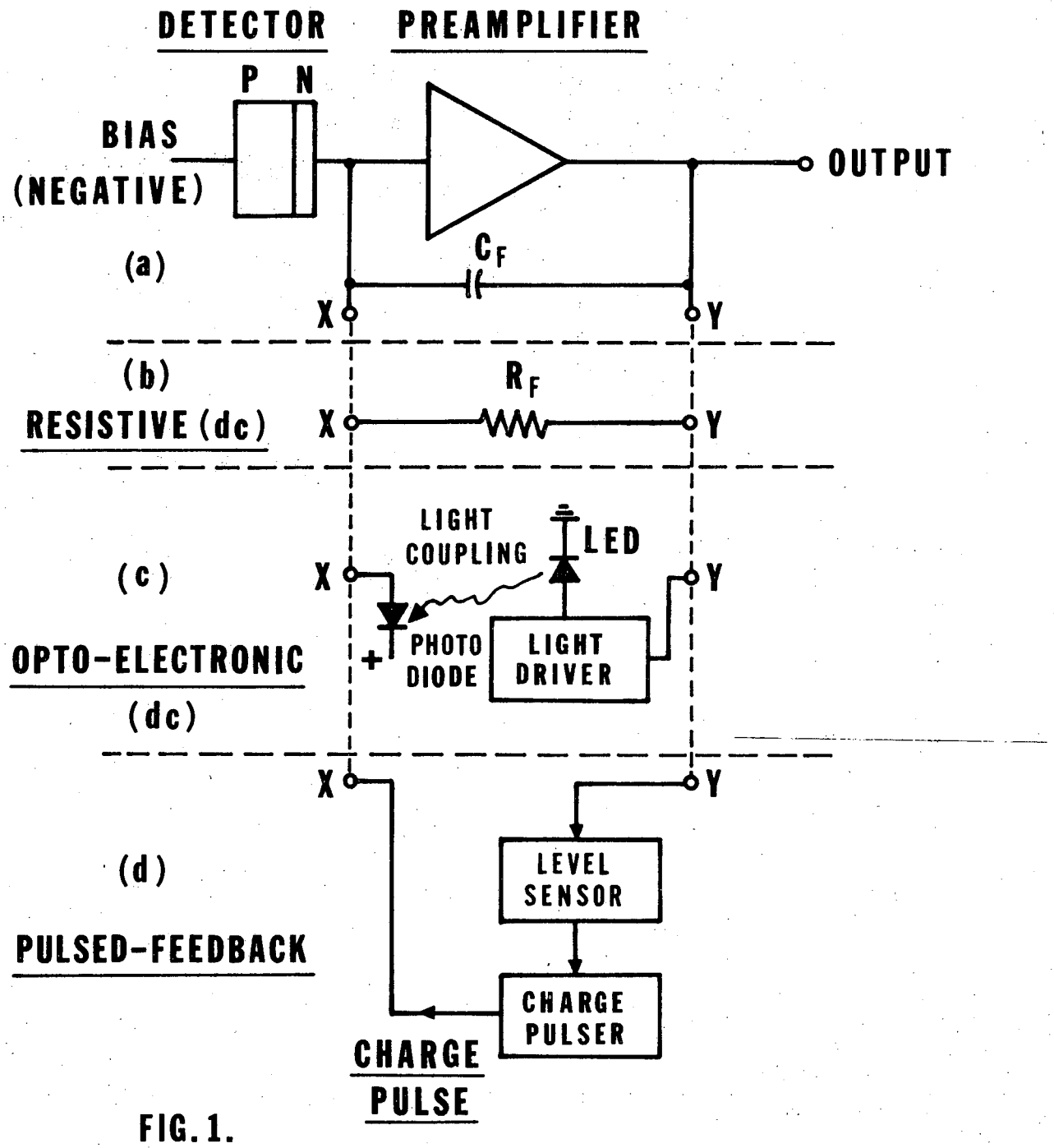

FIG. 1.

XBL 7010-6739

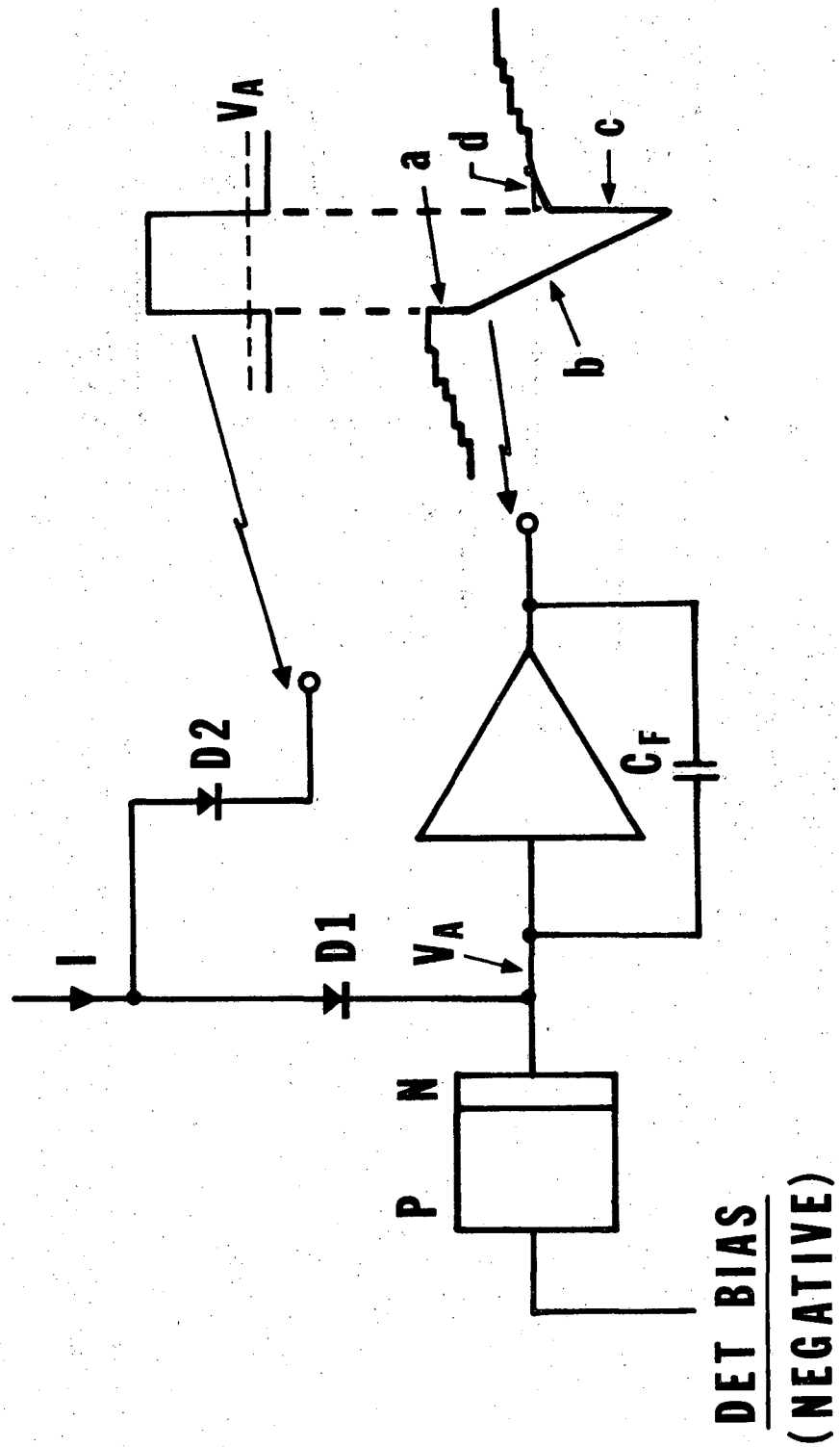

XBL 7010-6740

FIG. 2.

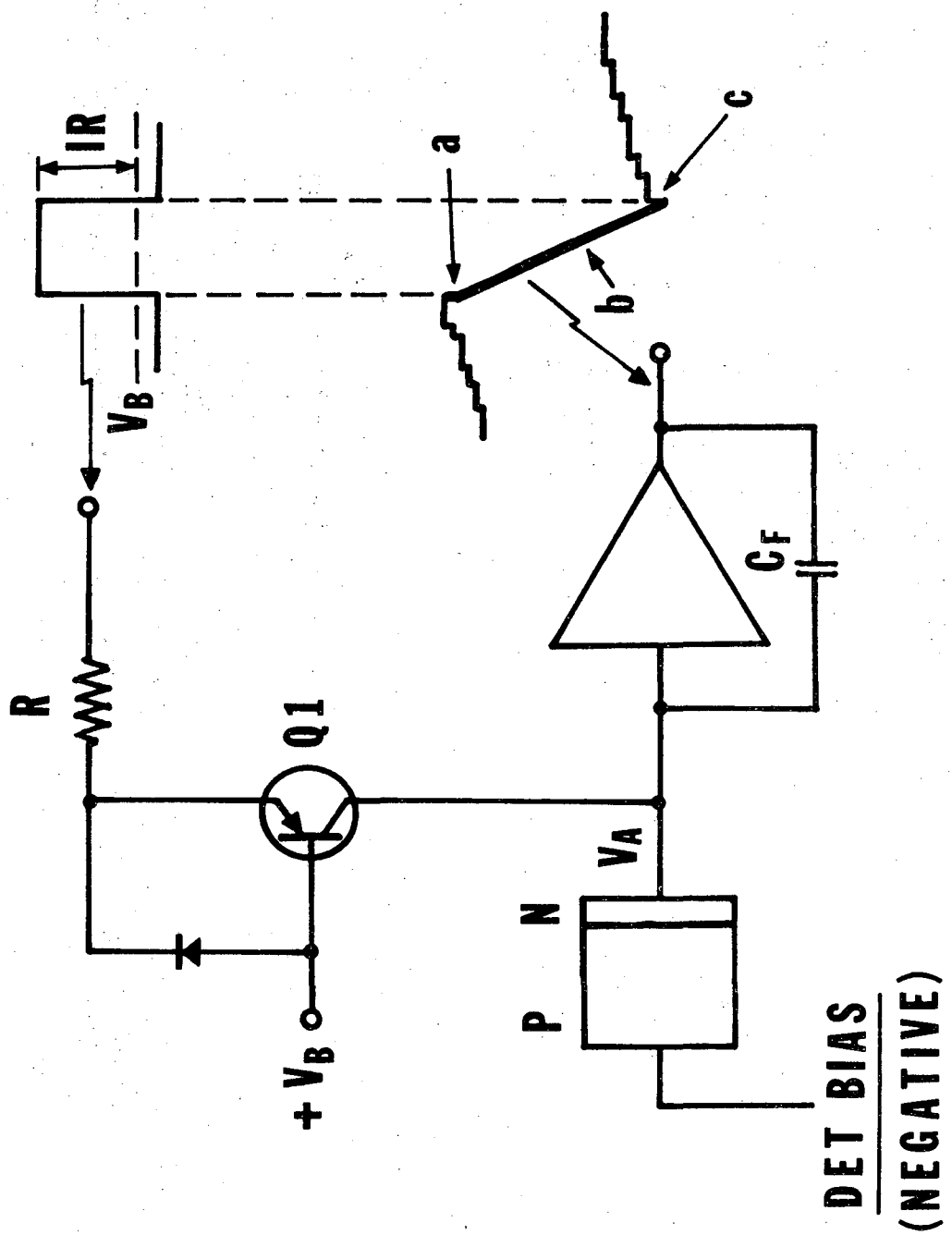

FIG. 3.

XBL 7010-6741

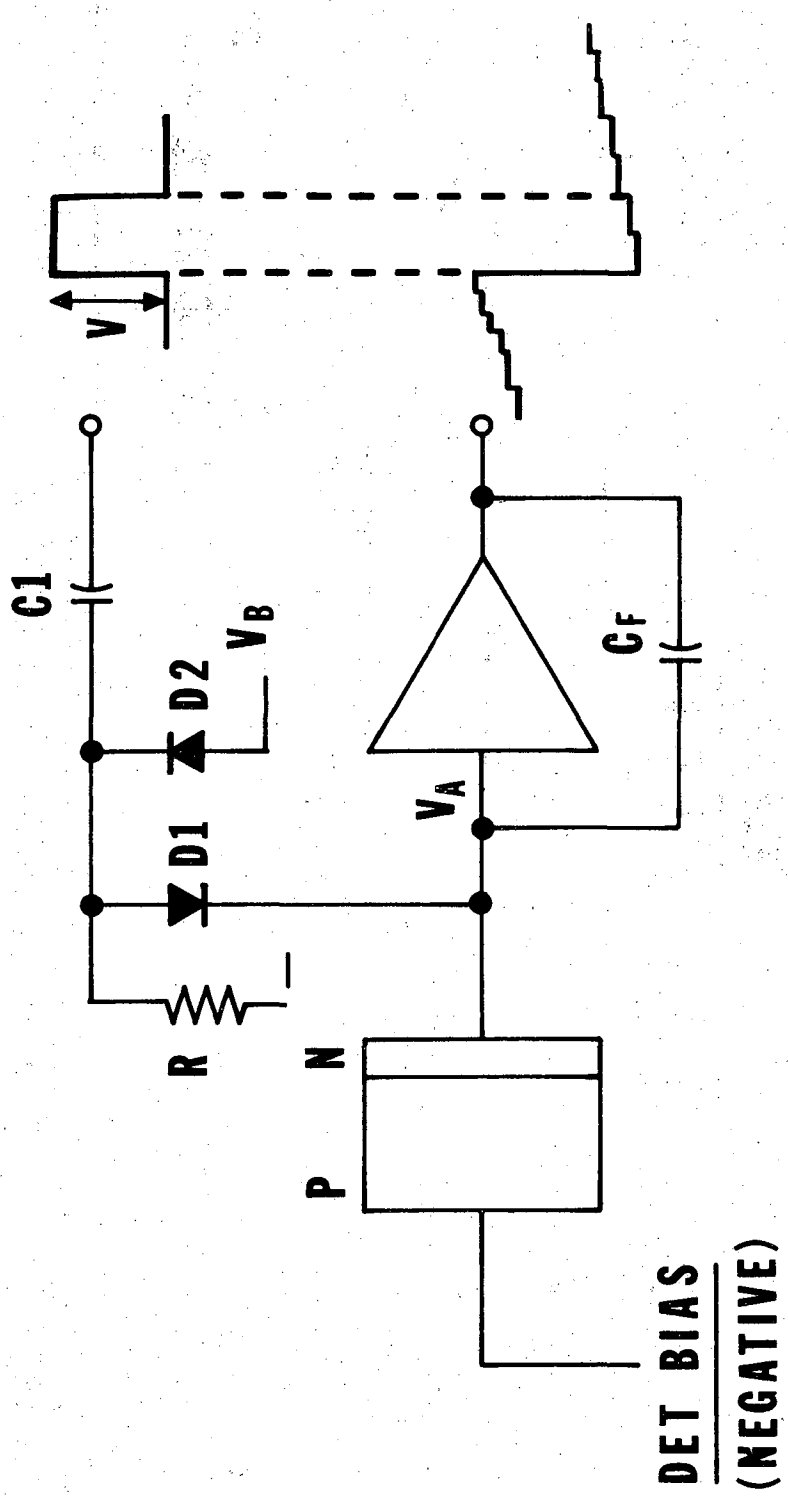

XBL 7010-6742

FIG. 4.

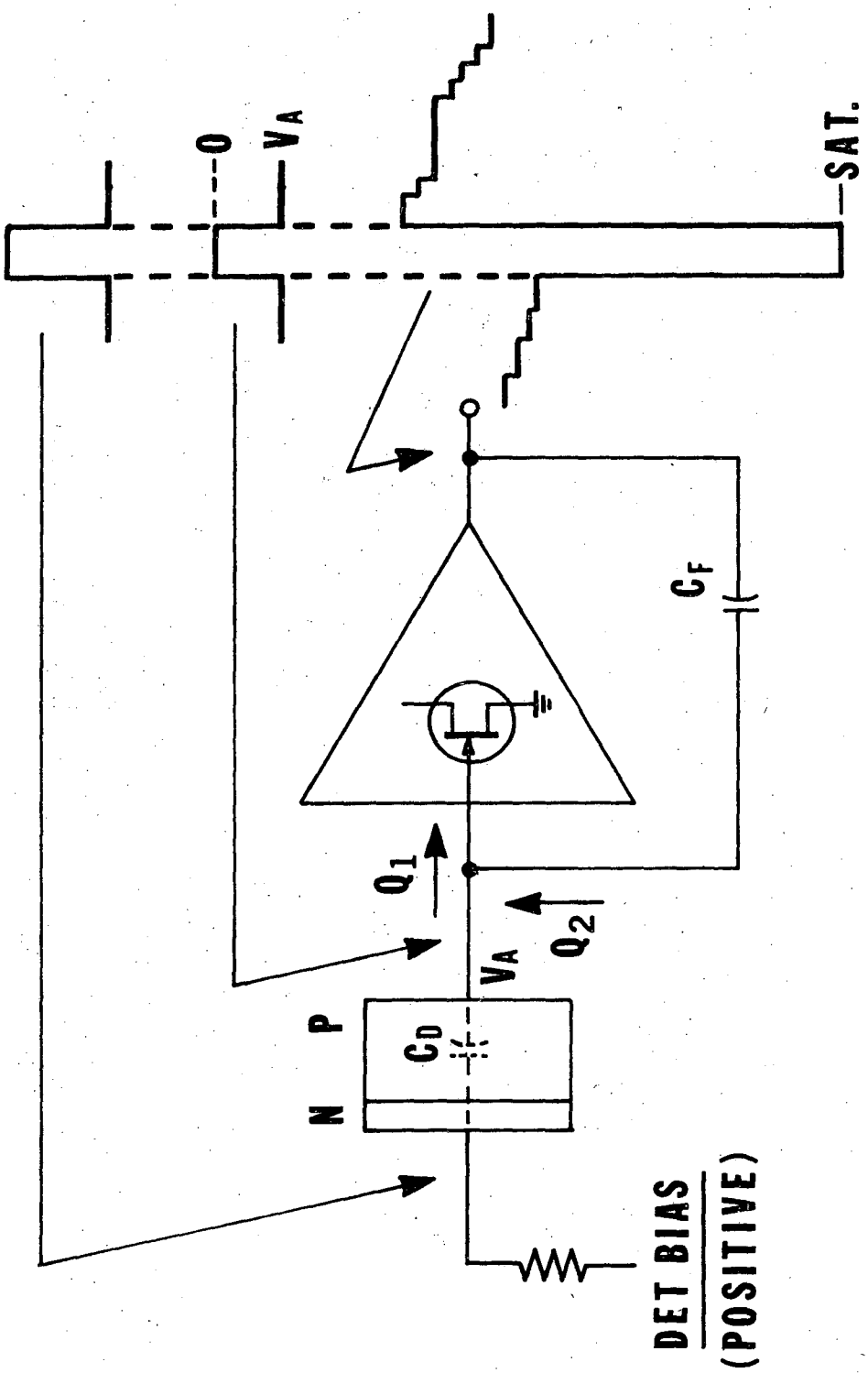

XBL 7010-6745

FIG. 5.

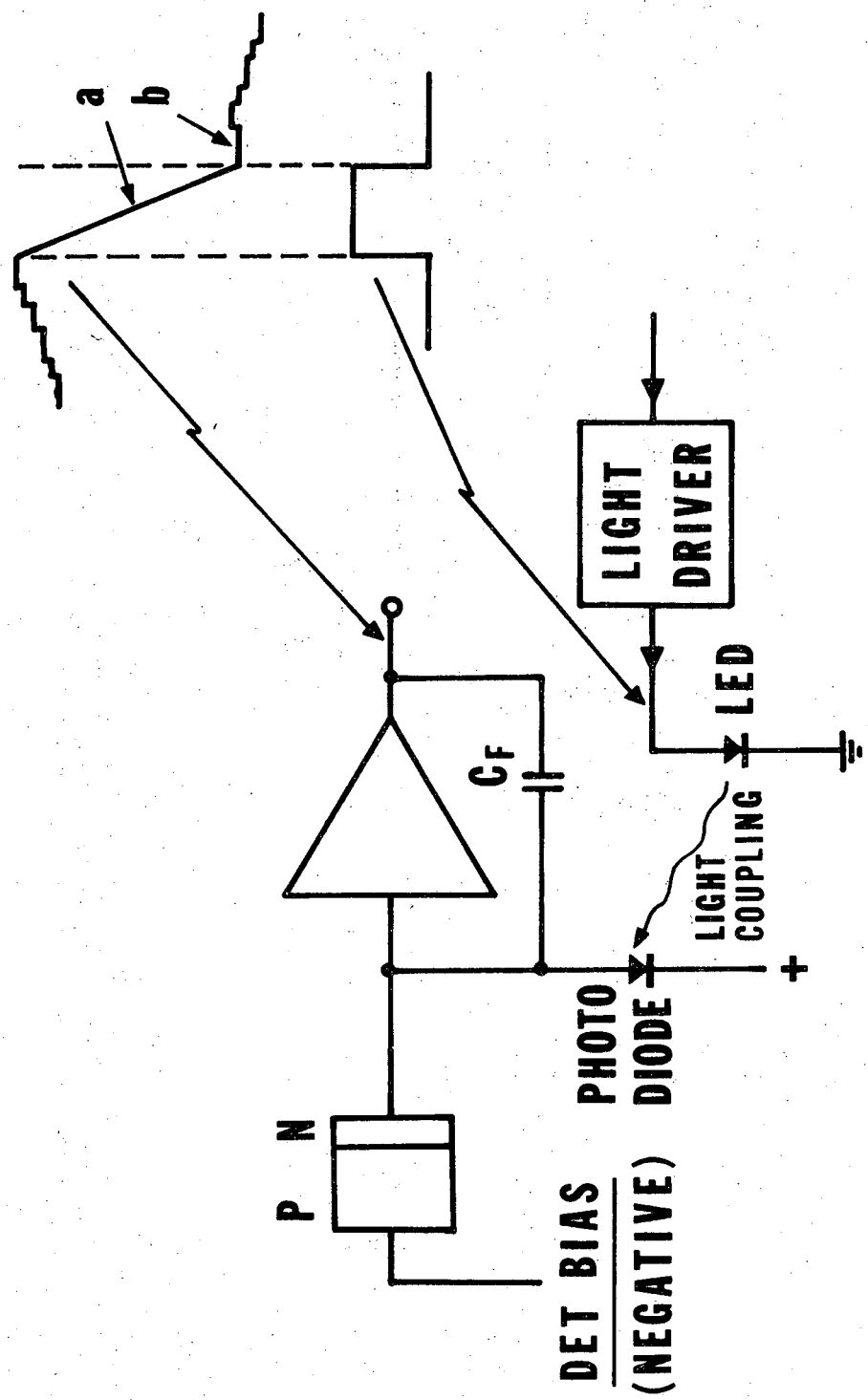

FIG. 6.

XBL 7010-6744

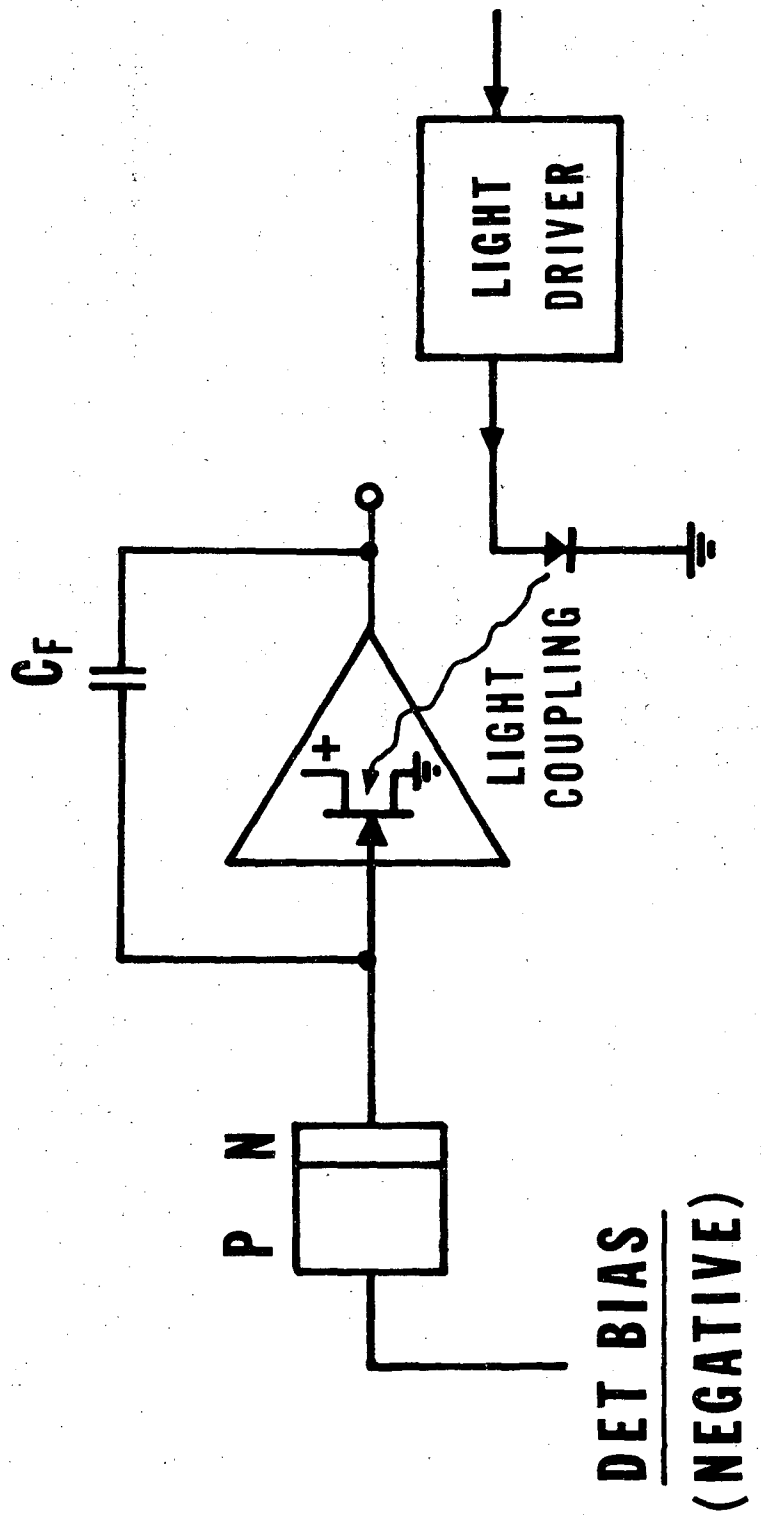

XBL 7010-6743

FIG. 7.

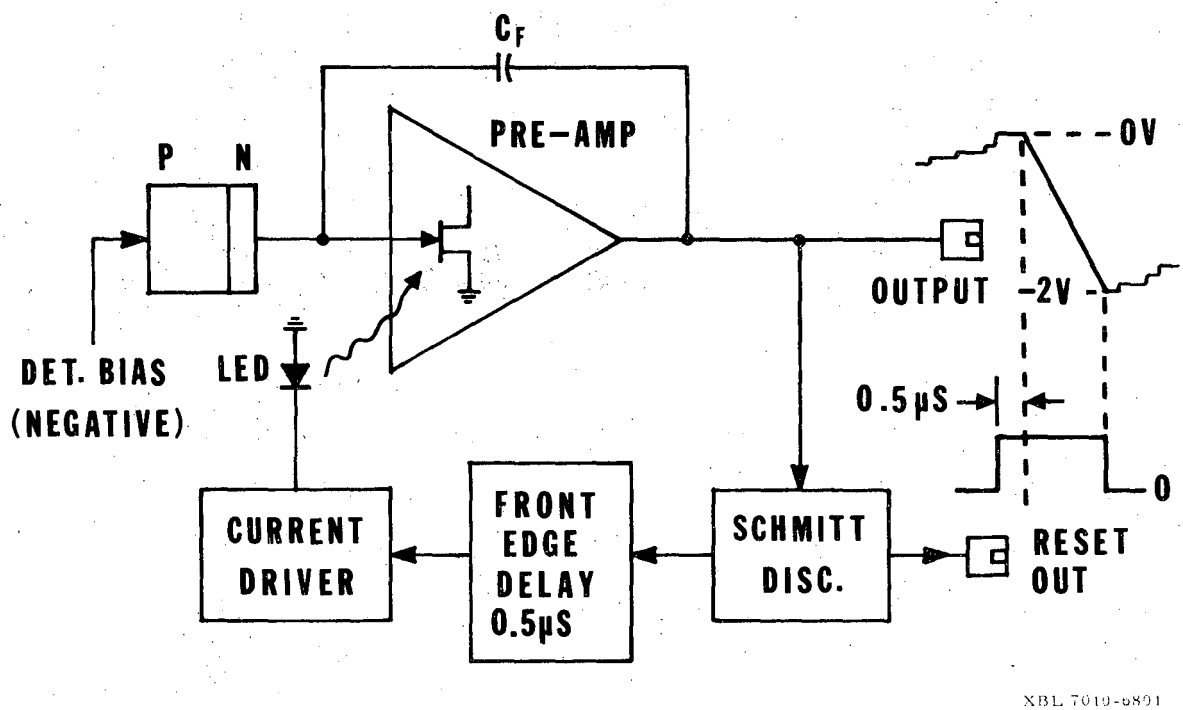
C_F
PRE-AMP
P
N
DET. BIAS
(NEGATIVE)
LED
OUTPUT
0V
-2V
0.5μS
0
CURRENT
DRIVER
FRONT
EDGE
DELAY
0.5μS
SCHMITT
DISC.
RESET
OUT
XBL 7010-6891

FIG. 8.

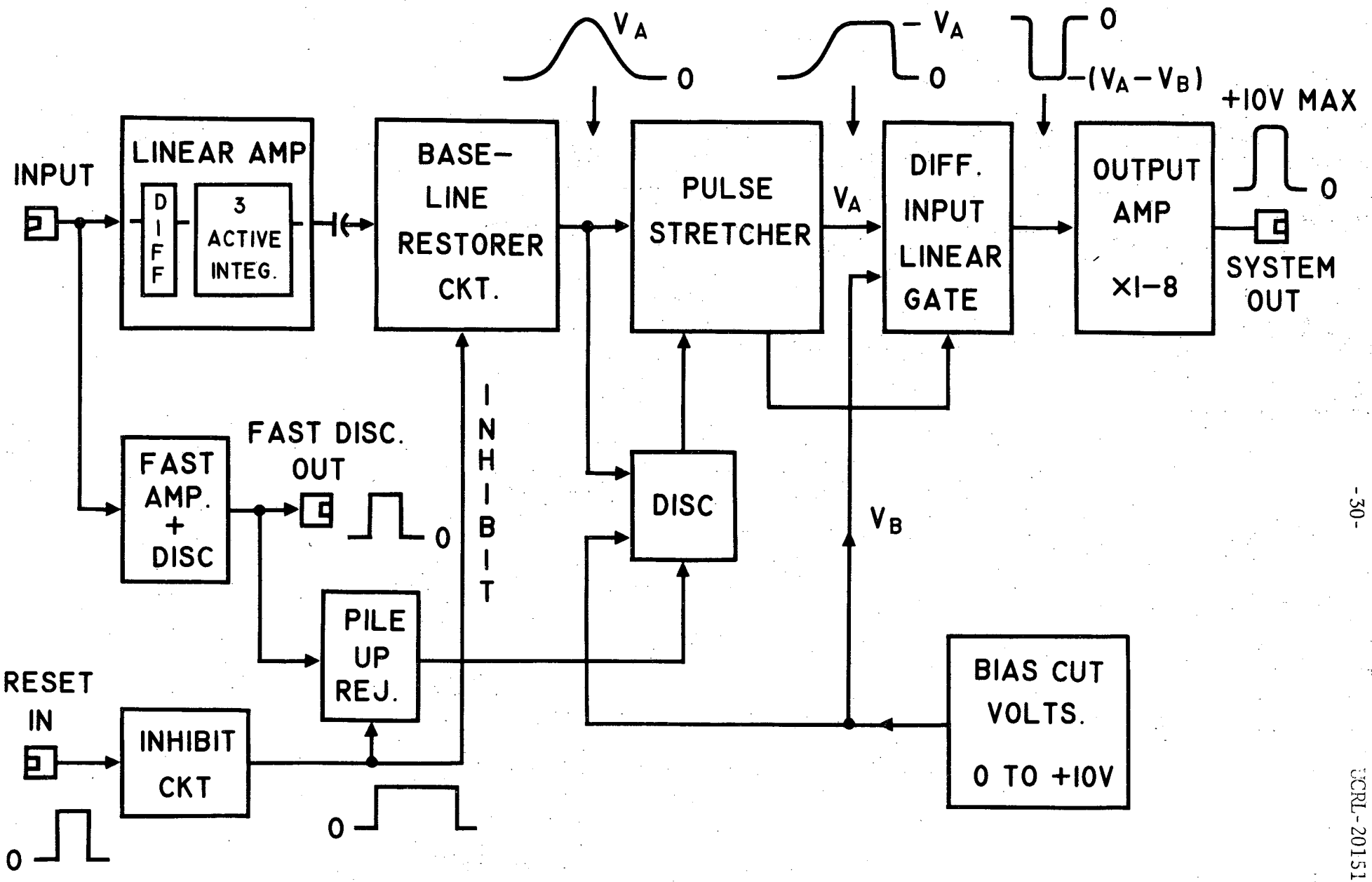
INPUT
LINEAR AMP
DIFF
3 ACTIVE INTEG.
BASE-LINE RESTORER CKT.
PULSE STRETCHER
DIFF. INPUT LINEAR GATE
OUTPUT AMP ×1-8
SYSTEM OUT
+10V MAX
0
V_A
0
$-V_A$
0
0
$-(V_A-V_B)$
V_A
V_B
FAST AMP. + DISC
FAST DISC. OUT
0
DISC
INHIBIT
PILE UP REJ.
RESET IN
INHIBIT CKT
0
0
BIAS CUT VOLTS.
0 TO +10V

FIG. 9.

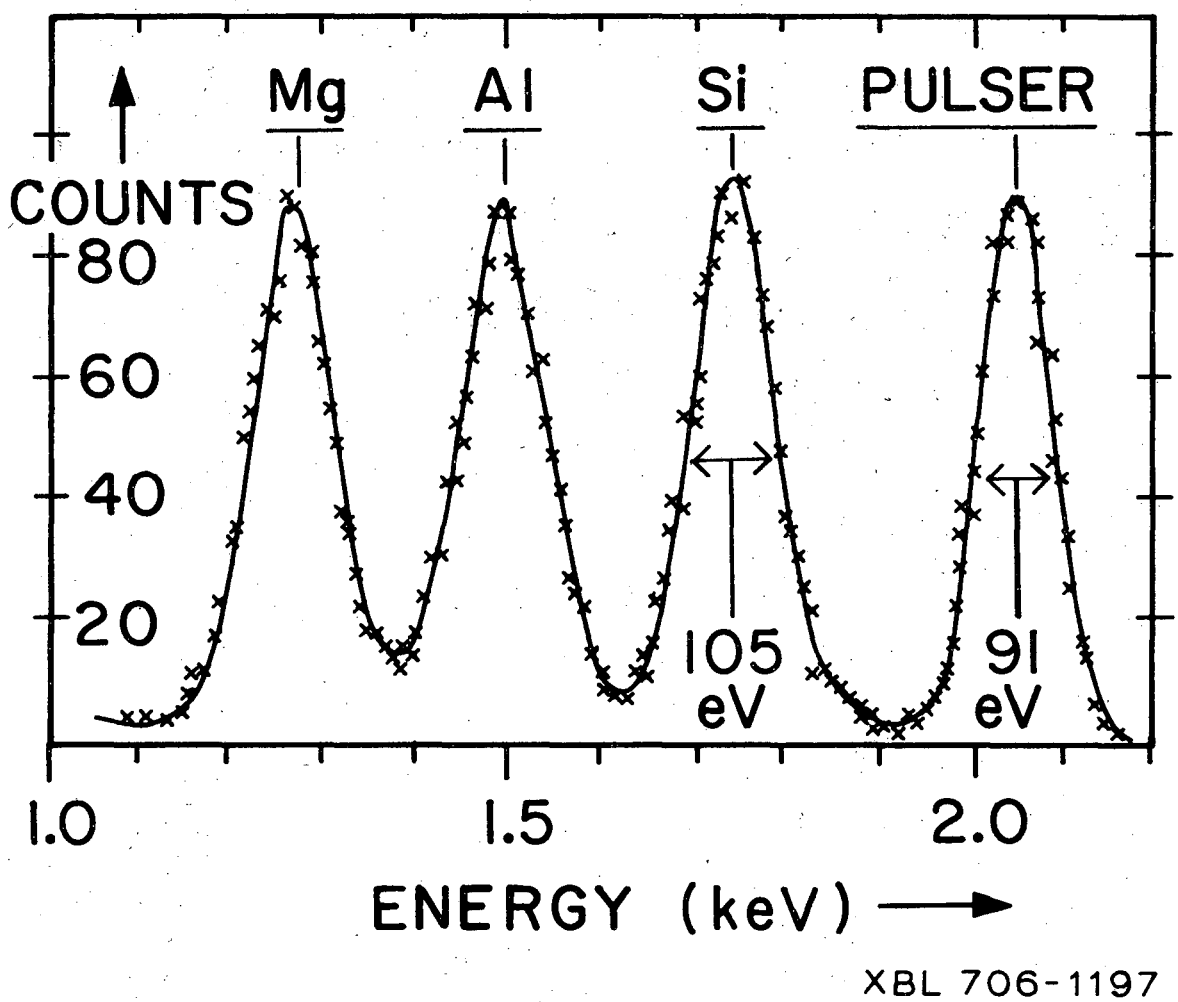
Mg
Al
Si
PULSER
COUNTS
80
60
40
20
105
eV
91
eV
1.0
1.5
2.0
ENERGY (keV)
XBL 706-1197

FIG. 10.

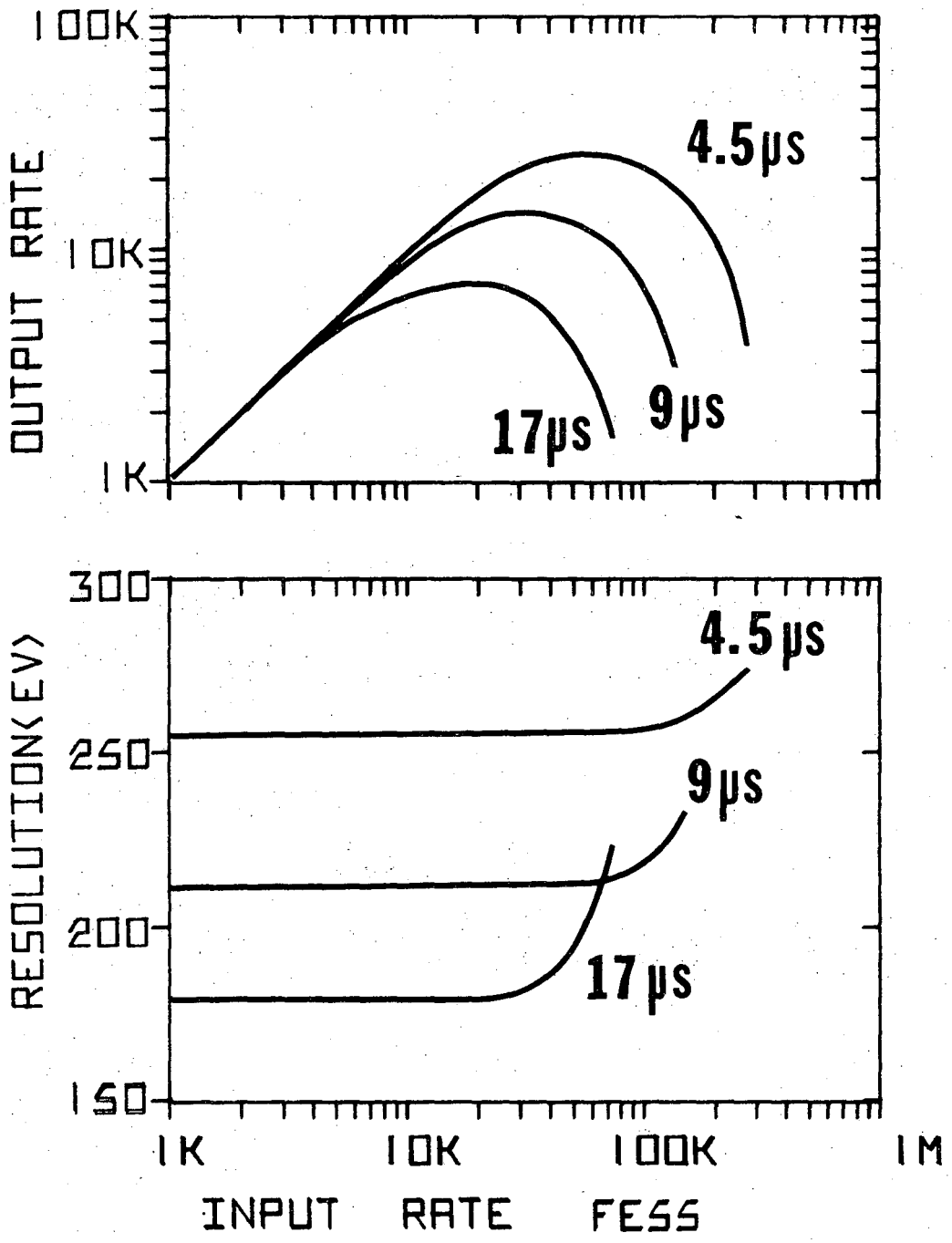

XBL 7010-6806

FIG. 11.

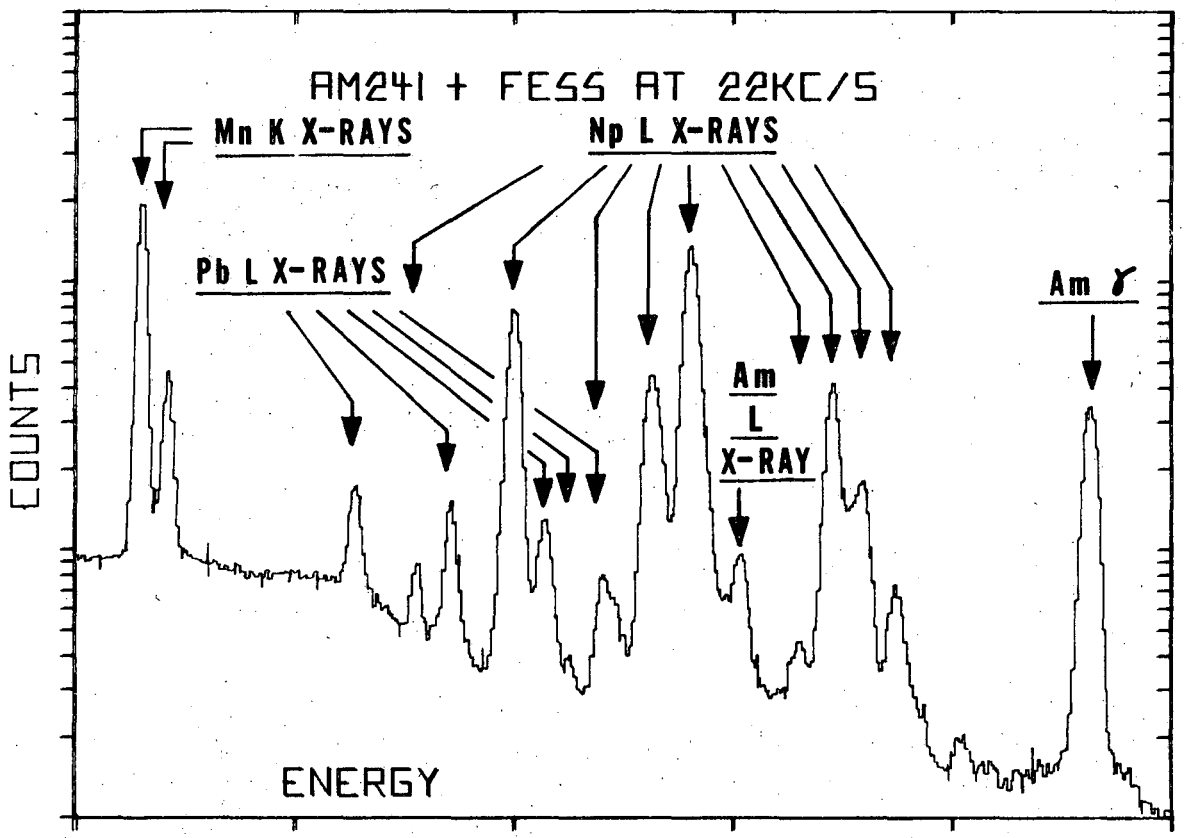

XBL 7010-6803

FIG. 12.

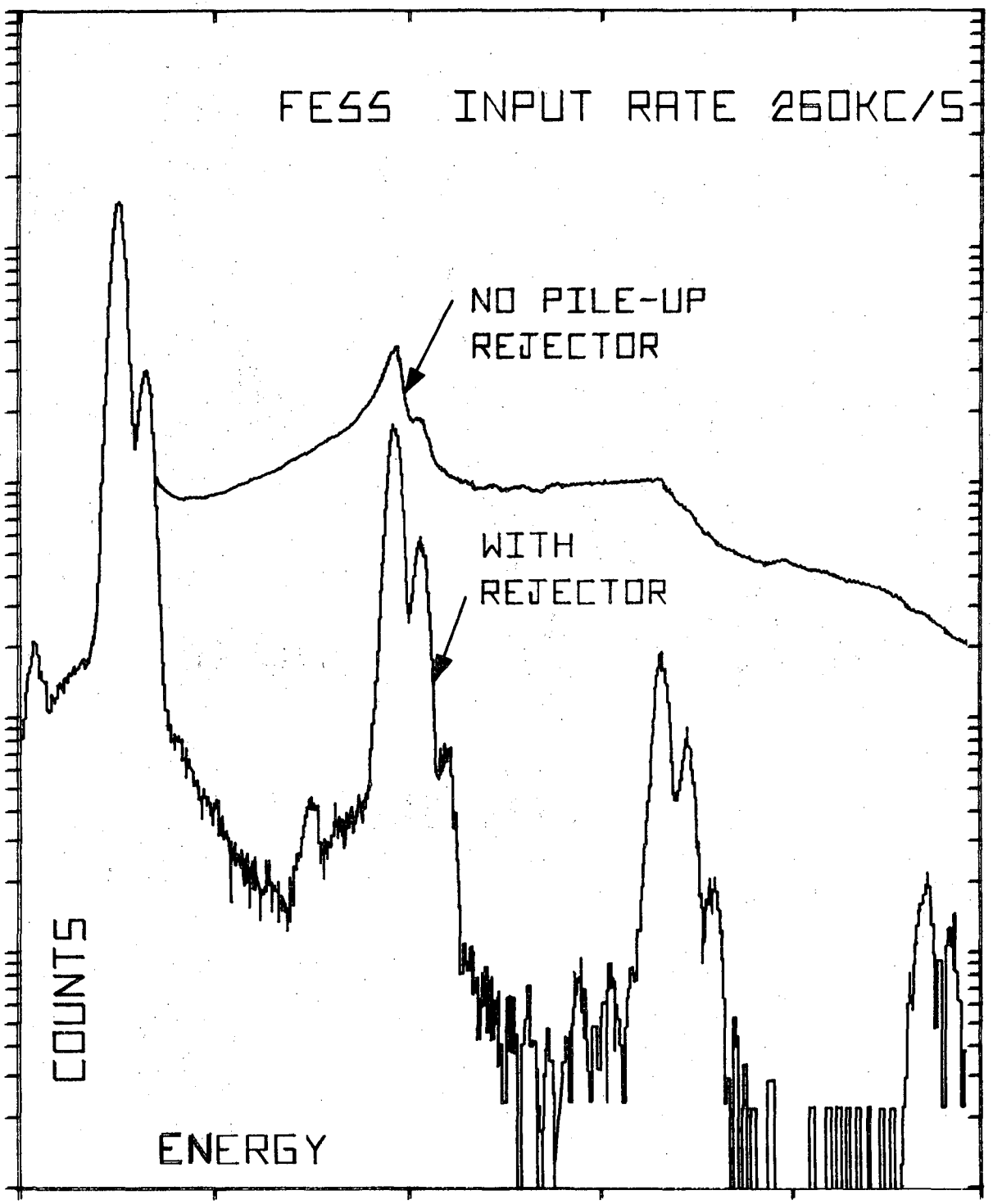

XBL 7010-6802

FIG. 13.

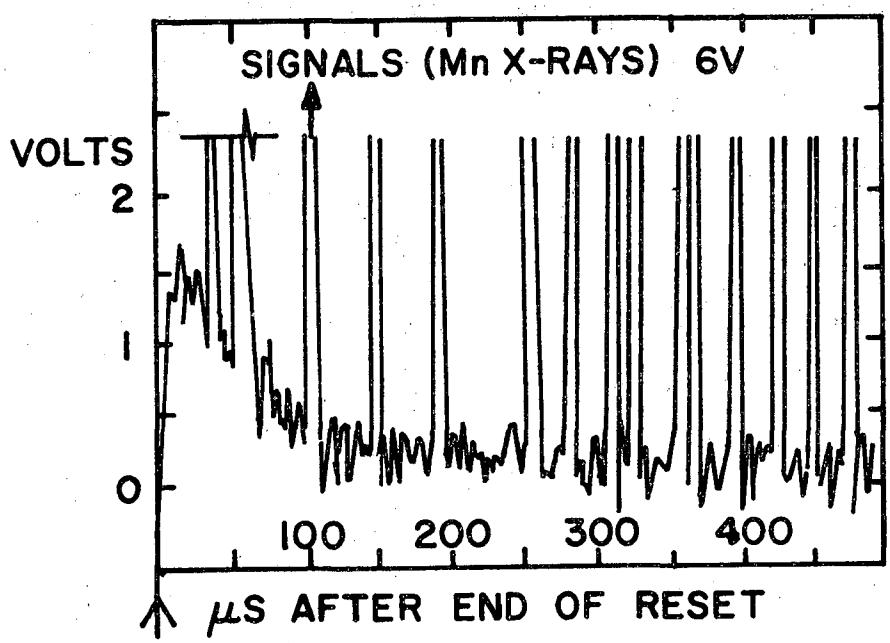

XBL 7010-6804

FIG. 14

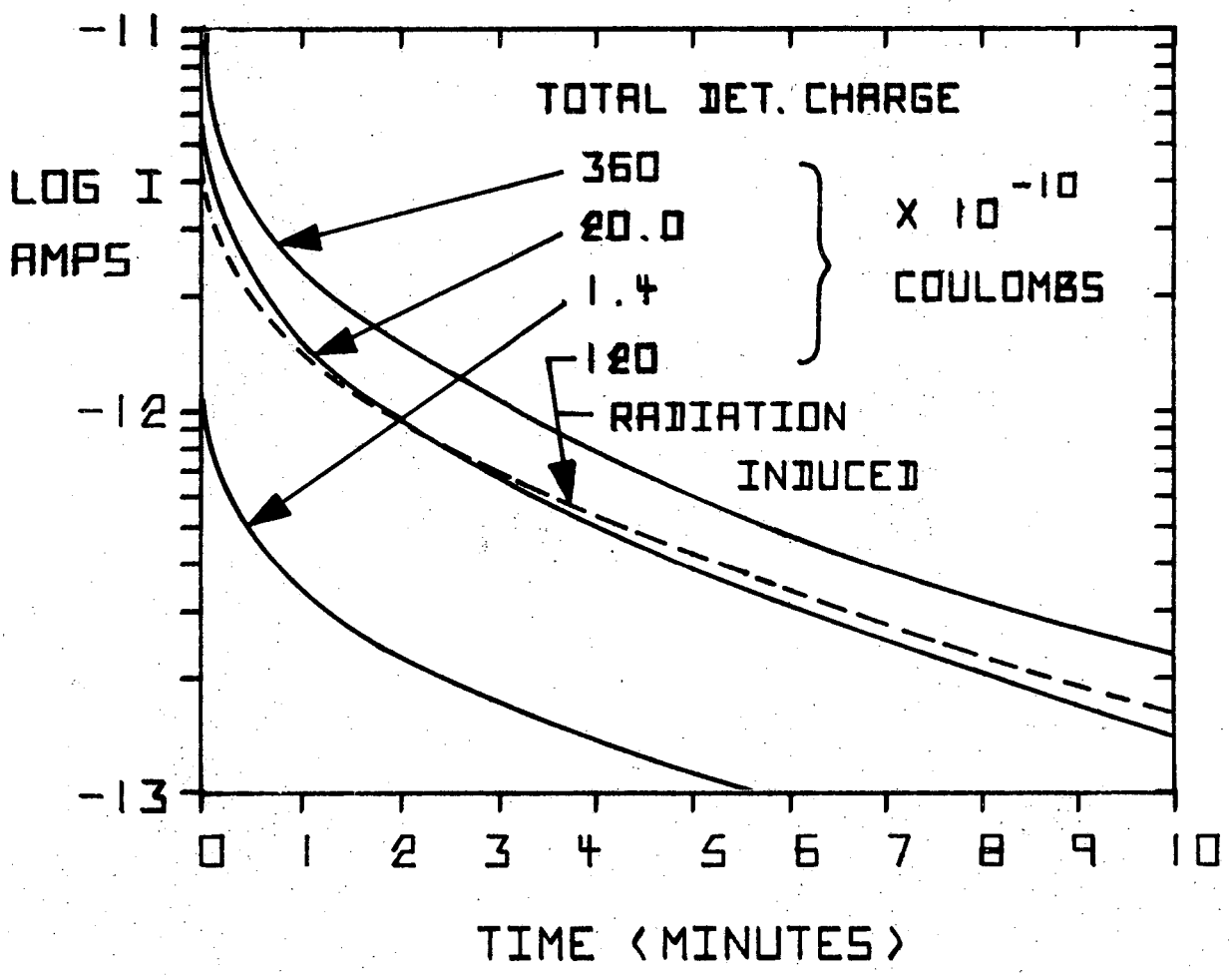

XBL 7010-6805

FIG. 15.

LEGAL NOTICE

This report was prepared as an account of Government sponsored work. Neither the United States, nor the Commission, nor any person acting on behalf of the Commission:

A. Makes any warranty or representation, expressed or implied, with respect to the accuracy, completeness, or usefulness of the information contained in this report, or that the use of any information, apparatus, method, or process disclosed in this report may not infringe privately owned rights; or

B. Assumes any liabilities with respect to the use of, or for damages resulting from the use of any information, apparatus, method, or process disclosed in this report.

As used in the above, "person acting on behalf of the Commission" includes any employee or contractor of the Commission, or employee of such contractor, to the extent that such employee or contractor of the Commission, or employee of such contractor prepares, disseminates, or provides access to, any information pursuant to his employment or contract with the Commission, or his employment with such contractor.

TECHNICAL INFORMATION DIVISION
LAWRENCE RADIATION LABORATORY
UNIVERSITY OF CALIFORNIA
BERKELEY, CALIFORNIA 94720