Presented at the Particle
Accelerator Conference,
Chicago, IL., March 1-3, 1971

UCRL-20174
Preprint

c.2

THE ERA 4 MeV INJECTOR

R. Avery, G. Behrsing, W. W. Chupp, A. Faltens,
E. C. Hartwig, H. P. Hernandez, C. Macdonald,
J. R. Meneghetti, R. G. Nemetz, W. Popenuck,
W. Salsig, and D. Vanecek

February 1971

AEC Contract No. W-7405-eng-48

TWO-WEEK LOAN COPY

*This is a Library Circulating Copy
which may be borrowed for two weeks.
For a personal retention copy, call
Tech. Info. Division, Ext. 5545*

UCRL-20174 c.2

LAWRENCE RADIATION LABORATORY
UNIVERSITY of CALIFORNIA BERKELEY

28

DISCLAIMER

This document was prepared as an account of work sponsored by the United States Government. While this document is believed to contain correct information, neither the United States Government nor any agency thereof, nor the Regents of the University of California, nor any of their employees, makes any warranty, express or implied, or assumes any legal responsibility for the accuracy, completeness, or usefulness of any information, apparatus, product, or process disclosed, or represents that its use would not infringe privately owned rights. Reference herein to any specific commercial product, process, or service by its trade name, trademark, manufacturer, or otherwise, does not necessarily constitute or imply its endorsement, recommendation, or favoring by the United States Government or any agency thereof, or the Regents of the University of California. The views and opinions of authors expressed herein do not necessarily state or reflect those of the United States Government or any agency thereof or the Regents of the University of California.

THE ERA 4 MeV INJECTOR*

R. Avery, G. Behrsing, W.W. Chupp, A. Faltens, E.C. Hartwig, H.P. Hernandez, C. Macdonald, J.R. Meneghetti, R.G. Nemetz, W. Popenuck, W. Salsig, and D. Vanecek

Lawrence Radiation Laboratory
University of California
Berkeley, California

Summary

A pulsed electron accelerator has been constructed and is now in operation at the Lawrence Radiation Laboratory, Berkeley. It was designed specifically for and is used as an injector for ERA (electron ring accelerator) studies. Electron bursts of 1200 amperes and 40 nanoseconds duration can be produced at energies of 1.0 MeV to 4.25 MeV. The present repetition rate is approximately one per second. Acceleration is accomplished by means of ferrite loaded accelerating sections, each of which is capable of maintaining a 250 kV voltage pulse across the accelerating gap for a period of 40 ns. The voltage pulse has a rise time of 12 ns and the total timing jitter is of the order of one nanosecond. Five sections stacked together and operated as a unit function as the electron gun. The gun employs a field emission cathode and is operated at approximately 1 MV. Additional acceleration is achieved by means of an iterated system of accelerator sections and solenoidal magnetic lenses.

Evolution of the Design

In November, 1968 we began a study of electron accelerators suitable for ERA studies at Berkeley. This preliminary effort was the first step in the planning and construction of the present accelerator. Experiments with Compressor 2 had just been completed and for these we had used the Astron injector at LRL Livermore at the invitation of N.C. Christofilos, its designer and builder. This accelerator and its counterpart, the "linear betatron" built at Dubna by the late V.I. Veksler[2] specifically for ERA studies were examined in some detail; the former quite extensively.

As preliminary specifications for our accelerator we chose the following:

Particle energy $T = 4$ MeV

Peak Current > 500 amperes

Charge per pulse 10^{14} e or $I \cdot \tau \sim 16000$ ampere nanoseconds

Desired emittance $(\pi \hat{a} \theta) < 0.1$ cm radian at 4 MeV

Momentum spread $< 3\%$

Pulse length 20-50 nanoseconds

Repetition rate 0.5 - 1 p.p.s.

The Astron injector meets these requirements; however, it operates at a much higher duty cycle than we require and this is directly reflected in the high power level and cost of the modulation system. We therefore attempted to scale down the modulation system to match our requirements. After several attempts, no solution offering economic advantages was found and we turned to other methods of modulation.

During the 1968 ERA Symposium A. Faltens and E.C. Hartwig had proposed a method for the electric acceleration of electron rings using cylindrical cavities modulated by Blumlein lines. An acceleration system of this type using ferrite loaded cavities was designed to match our specifications and almost immediately adopted. There were no questions of feasibility and only a small amount of development work was needed to select and specify a ferrite type. All that remained was to select a suitable electron gun.

Here again we turned to the Astron injector to study a hot cathode gun (and in addition the highly developed but less intense Klystron guns). There were also other guns; those of the field emission diode type[4,5] which have seen increased usage and development in recent years. These latter devices produce peak currents of thousands of amperes at several million volts. Little was known about the emittance of these guns but the available data indicated that small emittance might be obtained at somewhat reduced, but still interesting, current levels; however, almost no data were available on lifetimes and pulse to pulse repeatability of such cathodes when operated at pulse repetition rates approaching one per second.

A field emission diode gun is quite simple to construct and could therefore be quickly assembled and tested to provide answers to the questions of reliability and cathode life. A voltage source of the order of one million volts would be required for satisfactory performance. Alternately, a hot cathode electron gun of high current capability would require an extended design and construction effort.

The gun power supply design which was finally adopted permitted us to retain the option of either a hot or cold cathode gun. The gun power supply at present consists of five stacked accelerator cavities with a conducting rod which threads the bore. The cavity voltages are added along the length of this conducting rod which also functions as the cathode stem.

This arrangement may be easily altered to accept a hot cathode. It was first operated as a one MeV field emission gun. This gun has proven very reliable and adequate for our ERA studies. The hot cathode option has therefore never been pursued.

Description of the Accelerator

A side view of the accelerator is shown in Fig.1. A typical cell consists of a ferrite loaded accelerator cavity, Fig. 2, an oil filled Blumlein line approximately 15 ft. long which functions as the cavity modulator, and a Marx generator which charges the Blumlein line (Fig. 3). At the base of the Blumlein, a 250 kV high pressure air (150 psi) spark gap is located. This gap functions as the Blumlein shorting switch. A cross sectional view of the spark gap is shown in Fig. 4.

The accelerator cavity is loaded with a selected ferrite (Stackpole Ceramag 11). The amount is determined by the requirement that in order to maintain the impressed design voltage of 250 kilovolts on the accelerating gap for a period of 45 nanoseconds, which is the Blumlein output, at least 250 x 45 kilovolt-nanoseconds (flux change) are required of the ferrite.

One way of describing the operation is through the following sequence of events:

1) The output pulse of a 250 kilovolt Marx generator is used to charge the intermediate conductor of the Blumlein. In order to maintain the center conductor at ground potential a "ground" current flows to the center conductor. This current links the ferrite and magnetizes it (resets) in the opposite direction to that caused by the accelerating pulse, with magnitude approaching B_{max}.

2) Shortly after the charging current rate drops to zero, the Blumlein gap is fired. At this time the state of magnetization in the ferrite is drifting toward a value somewhat less than B_{max} but not appreciably less because we have chosen a ferrite with a sufficiently large coercive force, H_c, and have minimized the air gaps in the ferrite magnetic circuit. The air gaps in adjoining layers of ferrite are staggered to provide some shunting of flux around the gaps.

3) The Blumlein pulse of 250 kilovolts is now impressed upon the accelerator gap. This pulse has a potential duration of 45 ns as determined by the double length of the Blumlein. As long as this pulse persists, a voltage will be established across the accelerating gap. The passage of the voltage pulse traveling through the rest of the structure established a current loop encircling the ferrite in the opposite sense to the charging current. This pulse is now attenuated in the ferrite until saturation at B_{max} occurs, or the Blumlein pulse has terminated, whichever occurs first. During the pulse duration particles are accelerated to an energy corresponding to the full instantaneous gap voltage.

To complete the description of the acceleration cavity we add that the cavity and Blumlein are filled with a standard transformer oil which is dried and filtered. The oil-vacuum transition (see Fig. 2) is effected by a gasket sealed annular lucite insulator. The vacuum surface is scarped at a sharp angle to the electric field to minimize destructive spark damage and "tracking of the surface".[4]

The overall length of an acceleration module is 36", the cavity occupies 12", an iron core beam focussing solenoid mounted concentrically and exterior to the beam tube is mounted adjacent to the cavity. The remaining space is occupied in alternate cells by beam steering coils[6] and vacuum pumping tees. In-line isolation valves are placed between every four cells. In each cell an insulated joint is installed in the beam line to accomodate a flange mounted beam current and position monitor.[7]

Electron Gun

Five standard accelerator cavities stacked in tandem comprise the main body of the electron gun. A metal rod mounted on axis extends through the bore of the five cavities and terminates in a spherical cap 5 cm in diameter. The other end is connected to ground through a pulse flattening network. A plane grid of tungsten wires 3 mils in diameter and spaced 1/8" apart is placed at a distance of 2.5 cm from the spherical cap. This grid of about 95% transparency forms the anode of a field emission diode, while the central metal rod functions as the cathode stem. The field emitter cathode is mounted on the spherical cap. The emitter proper is a 0.5 mil tantalum ribbon wound into a five turn spiral one centimeter in overall diameter. Emission occurs at the ribbon edges which protrude slightly above the surface of the spherical gap.

In order to generate voltage across the diode, the five cavities are pulsed separately. The relative timing is such that pulses from the individual cavities add along the cathode stem so that the full sum voltage appears at the tip. The rise time of this pulse is of the order of 12 ns. At approximately 1 MV across the diode 1200 amperes useful electron current is transmitted through the anode grid. The cathode region is immersed in the field of solenoidal magnetic lens of central strength $B_z \sim 1400$ gauss which significantly increases the diode current accelerated through the grid to the accelerator. An additional solenoid of similar strength is located 14" downstream and is used to additionally focus the electron beam as it enters the first accelerating cavity.

Mechanical Arrangement

The accelerator is housed within a rectangular reinforced concrete enclosure 17 feet wide, 26 feet high and 100 feet long. The walls and roof are 18" thick and the whole structure is supported on concrete caissons. Portable concrete shielding blocks 30" thick are placed along the side walls and cover over 70 feet of the outside length of the enclosure at the high energy end. The end closures are 2 feet thick and constructed of heavy concrete shielding blocks.

A machine support and service platform is installed at mid-height in the enclosure. The accelerator is supported on seven structural steel support beams mounted near mid-height and spanning the width of the concrete enclosure. Aluminum alloy support frames are in turn mounted on the support beams. These support frames run parallel to the length of the tunnel and because of their appearance are referred to as "lathe beds". They are actually a form of Vee block upon which the cylindrical accelerator cavities are directly placed. This system provides a simple method of alignment of the accelerator cavities and other beam line components while leaving axial freedom for assembly and disassembly. The cavities are manufactured to sufficiently close tolerances that adjustments are not required when changing or installing cavities. The overall alignment accuracy is of the order of $\pm$ .010", while $\pm$ .030" is considered acceptable. The service platform adjacent to the accelerator is carried on independent support beams so that variations in floor loading do not affect the accelerator alignment.

We have installed the mechanical utilities systems immediately below the service platform. These consist of the high pressure air system (150 psi) which supplies air to the high voltage spark gaps; the low pressure air system (5 psi) which supplies air to the Marx generator spark gap columns and the water system which supplies cooling water to the oil diffusion pumps and the conduction cooled beam transport solenoids. Electric power and control wiring is also installed immediately below the accelerator in "ladder tray" wireways.

Individual accelerator cavities and Marx generators are filled with transformer oil and are not interconnected which greatly diminishes the safety hazards associated with large amounts of oil.

The accelerator vacuum requirements are modest. For reasons of operational convenience we have installed isolation valves in the accelerator beam line at approximately 12 foot intervals i.e. at the end of every fourth acceleration cell. We have supplied each four-cell section and the gun section with its own vacuum system. Except for some roughing and finishing cross connections these systems are essentially independent.

Each system consists of two 6" oil diffusion pumps rated at 1200 l/sec and fitted with a tight water-cooled baffle. This system maintains the accelerator vacuum pressure at 10^{-6} torr. Operation at pressures up to 2×10^{-5} torr is possible - above this pressure we become concerned with possible damage to the cavity insulator and therefore do not operate above this pressure.

The roughing and backing functions are alternately performed by one 21 ft.^{3}/min two-stage mechanical pump installed in each system. A fail-safe interlock system is provided. An ionization gauge interlocks the vacuum and high voltage to preclude operation at pressures greater than 2×10^{-5} torr.

Electrical Arrangement

The variation in the firing times or jitter of the many spark gaps, necessary for the acceleration operation, must be very small ($\leq$ 1ns) if the maximum length output pulse (consistent with Blumlein line length and ferrite volt-seconds) is to be obtained. Rapid rise of the current is also a requirement. Such requirements led to the selection of a high pressure air overvoltaged spark gap. While it is not difficult to operate a single gap with a 1 ns jitter for a time, it becomes more difficult to impose the same requirement on many gaps and to ask for many pulses without appreciable change in operating characteristics. There are many ways to trigger a spark gap, some of which show great promise for low jitter, low maintenance operation of the gaps. The high voltage gaps selected are the conventional 3 electrode field distortion type, pressurized with 150 psi of dry air. The trigger electrode is operated at 1/2 gap voltage because the 1/2 voltage bias allows more precise adjustment of the null point of the trigger so that smaller radii and hence larger trigger fields may be obtained. Fig. 4 shows the cross section of the gap. The trigger electrode is a thin disc with a $1\frac{1}{2}$" dia. center hole in it. The cylindrical object around the outer edge is a shield to protect the insulator. As the trigger electrode wears, the hole grows larger, but the triggering characteristics do not change. The trigger electrode voltage typically goes from $+\frac{V}{2}$ toward $-\frac{V}{2}$ when the trigger pulse is applied.

Spark gaps display the least jitter when they are operated very close to their breakdown voltage. Overvoltaged gases exhibit an inverse breakdown time-voltage relationship. ($Vt^n = k$) where the exponent n is less than 1. If the required hold-off voltage is applied to the gap quickly enough (~ 1 μsec) the gap will hold off more than its D.C. breakdown value. Accordingly, all gaps, where small jitter is required have the hold-off voltage applied about 330 ns before the trigger electrode is pulsed. If a trigger pulse does not arrive the gap will usually fire by itself a short time (~ 100 ns) later. These high voltage pressurized spark gaps are used through the high level chain (see fig. 5). The remaining low voltage trigger system employs d.c. operated spark gaps since jitter is relatively unimportant here.

The triggering system is arranged to accept a pulse command, fan it out until sufficient outputs are available and increase the power level of each output until the overall system jitter is acceptable. In the low jitter section a spark gap supplies triggers to 3 spark gaps of comparable output power. The spark gap, as other active devices, must be recognized to have a finite gain-bandwidth product. The timing of the accelerating gap voltages relative to each other is adjusted by cable lengths. For example, since each accelerating cavity is approximately 1 ft. long and 5 cavities are used to drive the gun, the cavity nearest the cathode is triggered 5 ns after the cavity at the other end of the cathode rod. Similar delays are added to subsequent accelerating cavities downstream from the cathode.

The same spark gap design used to discharge the Blumlein lines is used to provide the trigger to the Blumlein spark gaps. (3-output Master Firing Chassis in fig. 5). The Blumlein spark gap assembly also serves as a coupling between the Marx generator and Blumlein line. The charging voltage, the $\frac{1}{2}$ voltage trigger lines, and the triggering pulse are transmitted through the insulator in the coupling.

Accessibility for servicing both the gap and Marx generators was a design requirement. In the present system, gap electrodes can be removed quickly without disturbing other components. Since arc erosion can not be eliminated, the electrodes are readily replaceable and easily fabricated. Typically, the electrodes can be replaced in less than five minutes. The entire spark gap assembly can be removed without draining oil from the Blumlein or Marx generator.

Internal arrangement of the high pressure spark gaps was determined by pulse characteristics, proper impedance, clearances and paths adequate to prevent arcing, and necessity for flushing air around electrodes between pulses.

The feed-through insulators at the Blumlein and Marx generator connections must withstand the 150 psi internal pressure of the spark gap and the mechanical and electrical stress from high voltage. An unfilled epoxy casting resin was chosen for these critical parts.

Chronology and Performance

Following the design study in November, 1968, we proceeded with the design and development of the accelerator and associated facilities. Building construction began September 29, 1968 and was completed May 12, 1970.

In June 1970 the electron gun was placed into operation. After only a few weeks of operation we achieved reliable operation following the installation of the spiral ribbon cathode.

The measured performance of the gun is as follows:

$T \sim 1.0$ MeV

$i \sim 1000$ amperes

$\frac{\Delta p}{p} < 0.5\%$ by magnetic analysis

ϵ (emittance at above current and energy) $\sim 0.07\ \pi$ cm radian

Operation at 2 MeV commenced in August 1970 following the installation of accelerator cavities. These were placed into operation without incident.

Operations have continued at 2.0 MeV in carrying out the Compressor 4 experiments. During this time the accelerator has been operated for a total of 10^6 pulses. Operation is relatively trouble free and maintenance has been minimal. Ribbon cathodes have been operated for $3 - 5 \times 10^5$ pulses with no evident failure. All components (eight additional modules) which are required for the extension of the energy to 4.25 MeV are complete and are to be installed at the next scheduled shut-down for changes in the experimental setup. This will occur in May 1971. A two week vacuum shut-down plus a two week period of electrical

installations and de-bugging will be required.

Acknowledgements

The rapid development and construction of this research facility would not have been possible without the encouragement and strong support of E.M. McMillan. We have benefited greatly from the cooperation and assistance received from all divisions of this laboratory.

The authors also gratefully acknowledge the encouragement and support of E.J. Lofgren and Denis Keefe.

References

1. J.W. Beal, N.C. Christofilos and R.E. Hester, Proc. of the 1969 Particle Accelerator Conf., IEEE Trans. in Nucl. Sci. NS-16, No. 3, June 1969, p. 294.

2. V.I. Veksler, et al, Proc. of the Sixth Intl. Conf. on High Energy Accelerators, CEAL-2000, 1967, p. 289.

3. E.C. Hartwig, A. Faltens (p. 44), and E.C. Hartwig and P. Hernandez (p. 332), Symposium on Electron Ring Accelerators held at Lawrence Radiation Laboratory, 1968.

4. W.T. Link and D.H. Sloan, Record of IEEE 9th Annual Symp. on Electron Ion and Laser Beam Technology, 1967.

5. "The Febetron", Field Emission Corp., McMinnville, Oregon.

6. R. Avery, E. Hartwig, A. Faltens, "Non-intercepting Monitor of Beam Current and Position", (to be published) in IEEE Transactions on Nuclear Science, Particle Accelerator Conf., March 1-3, 1971.

7. R.T. Avery, G.R. Lambertson and C.D. Pike, "Printed Circuit Steering Coils", IEEE Transactions on Nucl. Sci. (to be published).

* Work supported by the U.S. Atomic Energy Commission.

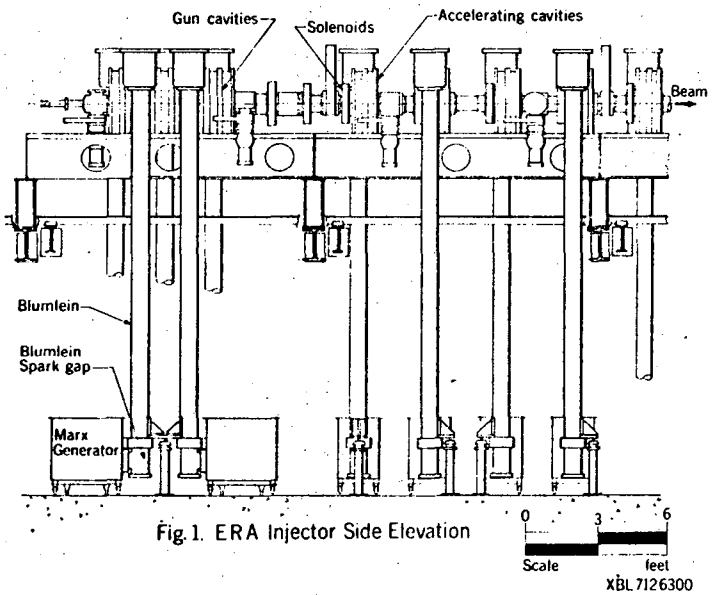

Fig. 1. ERA Injector Side Elevation

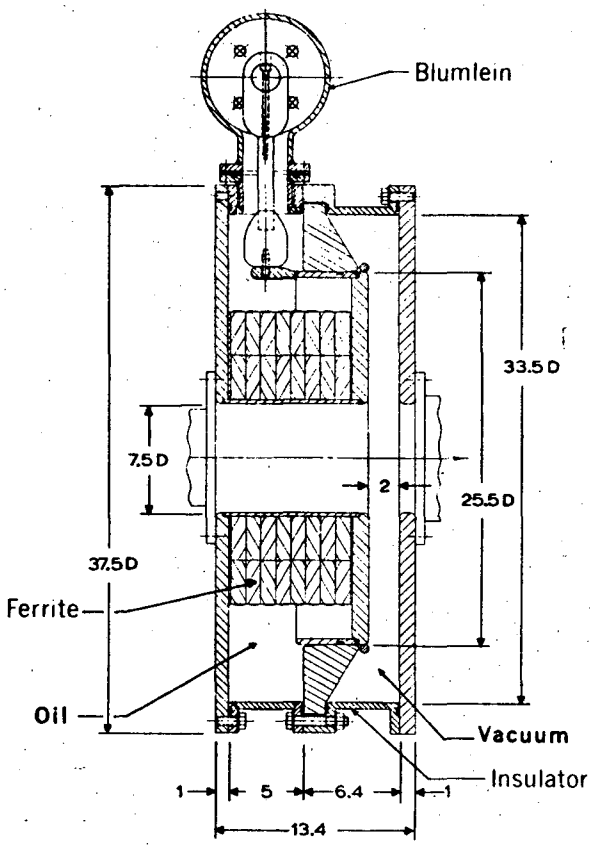

Fig. 2. Accelerating Cavity

XBL 7126272

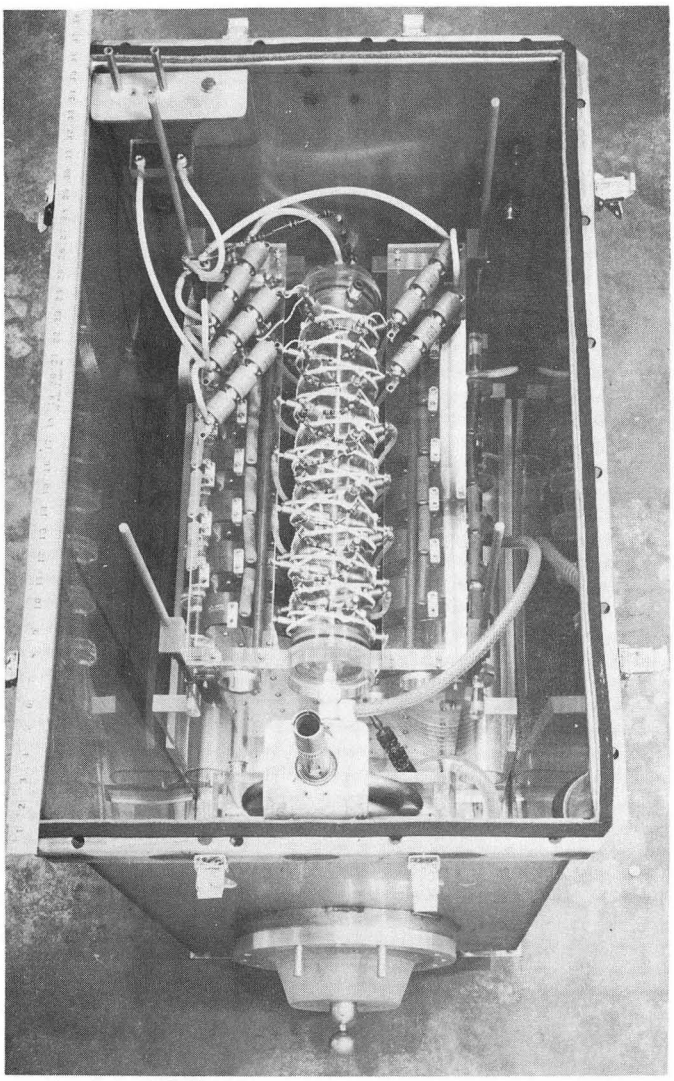

Fig.3. 250 kV Marx Generator
(Top view with cover removed)

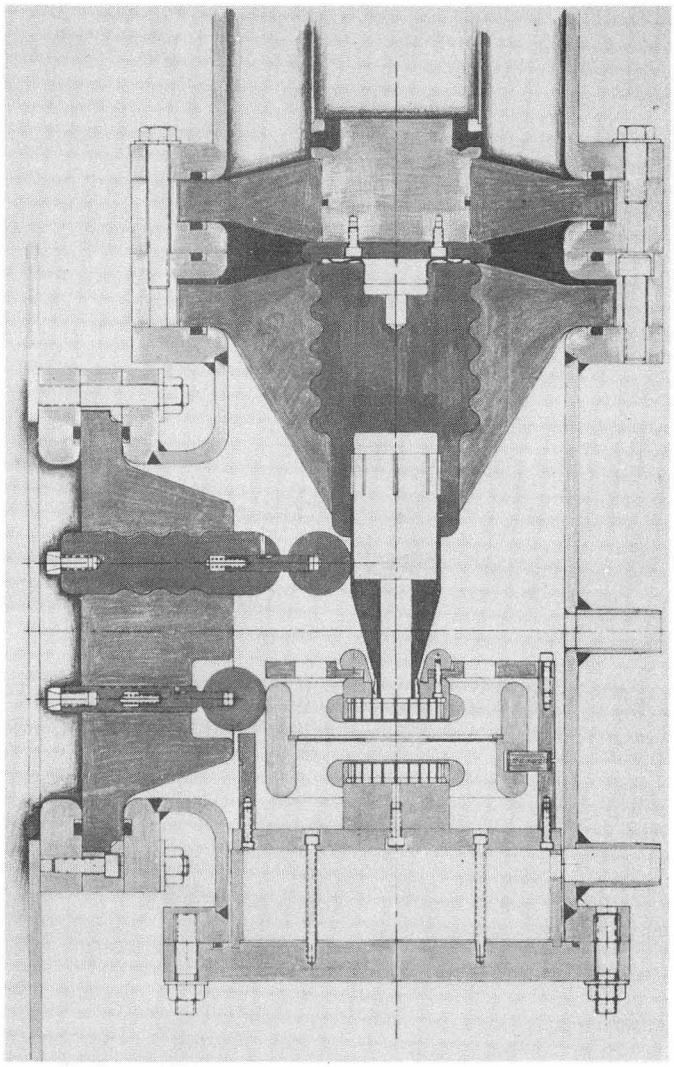

Fig. 4. Blumlein Spark Gap Section

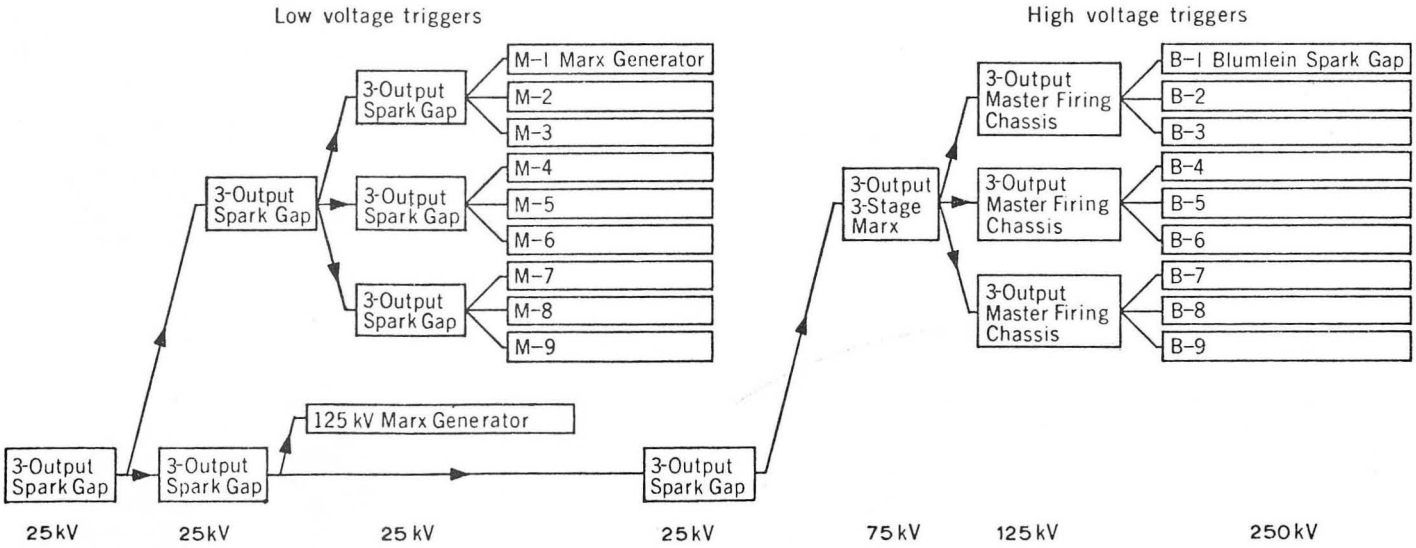

Fig. 5. 4 MeV Injector Trigger Chain (Upper half shown, lower half mirror image)

XBL 712 267

LEGAL NOTICE

This report was prepared as an account of work sponsored by the United States Government. Neither the United States nor the United States Atomic Energy Commission, nor any of their employees, nor any of their contractors, subcontractors, or their employees, makes any warranty, express or implied, or assumes any legal liability or responsibility for the accuracy, completeness or usefulness of any information, apparatus, product or process disclosed, or represents that its use would not infringe privately owned rights.

TECHNICAL INFORMATION DIVISION
LAWRENCE RADIATION LABORATORY
UNIVERSITY OF CALIFORNIA
BERKELEY, CALIFORNIA 94720