Presented at the Particle
Accelerator Conference,
Chicago, Ill., March 1-3, 1971

UCRL-20177
Preprint

C.2

MECHANICAL FEATURES OF ELECTRON-RING COMPRESSORS

R. T. Avery, W. W. Chupp, H. P. Hernandez,
J. R. Meneghetti, and W. W. Salsig

February 1971

AEC Contract No. W-7405-eng-48

TWO-WEEK LOAN COPY

This is a Library Circulating Copy
which may be borrowed for two weeks.
For a personal retention copy, call
Tech. Info. Division, Ext. 5545

LAWRENCE RADIATION LABORATORY
UNIVERSITY of CALIFORNIA BERKELEY

UCRL-20177 C.2

DISCLAIMER

This document was prepared as an account of work sponsored by the United States Government. While this document is believed to contain correct information, neither the United States Government nor any agency thereof, nor the Regents of the University of California, nor any of their employees, makes any warranty, express or implied, or assumes any legal responsibility for the accuracy, completeness, or usefulness of any information, apparatus, product, or process disclosed, or represents that its use would not infringe privately owned rights. Reference herein to any specific commercial product, process, or service by its trade name, trademark, manufacturer, or otherwise, does not necessarily constitute or imply its endorsement, recommendation, or favoring by the United States Government or any agency thereof, or the Regents of the University of California. The views and opinions of authors expressed herein do not necessarily state or reflect those of the United States Government or any agency thereof or the Regents of the University of California.

MECHANICAL FEATURES OF ELECTRON-RING COMPRESSORS*

R. T. Avery, W. W. Chupp, H. P. Hernandez, J. R. Meneghetti, and W. W. Salsig
Lawrence Radiation Laboratory, University of California
Berkeley, California 94720

Summary

The technology of electron-ring compressors draws more heavily on controlled thermonuclear research than on conventional accelerators. This is dictated by the rapidly rising, intense magnetic fields (> 50 kG in < 1 ms), the required ultrahigh vacuum (≈ 10^{-9} torr), and the need for extensive diagnostics and instrumentation during the development phase. Interesting mechanical features of the Berkeley Compressor 3, Compressor 4, and Compressor 5 electron-ring research apparatus are described, including ceramic chamber design, ceramic-metal and ceramic-ceramic joining techniques, cryopumping, vacuum bakeout practices, and novel diagnostic probes suitable for ultrahigh vacuum service.

Introduction

A previous paper[1] concentrated on the beam transport and magnet coil aspects of compressor design, with some discussion of vacuum aspects. The present paper is principally directed at the means for achieving ultrahigh vacuum in the presence of rapidly varying magnetic fields, together with requirements for numerous diagnostic probes.

The electron ring is compressed to its desired small size by the application of rapidly rising, intense magnetic fields. Typically, magnetic fields of ≈ 50 kG are reached in less than 1 ms. The use of metals is severely restricted because of heating and (or) magnetic field distortions due to eddy currents. Eddy-current loops of a few square cm in area can be a problem. As a general rule, metal structures with cross sections of such size are not permitted within a meter of the compression region.

The intense electron ring can readily ionize gas particles within the compressor. The quantity and type of such ions affect the particle dynamics of the electron ring and during development should be under control of the experimenter. Therefore, to prevent the ring from loading itself with a significant fraction of unwanted residual gas ions, pressures in the 10^{-9} torr range are required. Providing electrically nonconducting materials of adequate strength that are also suitable for ultravacuum service has been a principal challenge in development of compressor hardware.

Ceramic Chamber Design

At Berkeley, we chose to fabricate our compressor vacuum chambers of high-alumina ceramic to obtain low outgassing rates while avoiding eddy currents from the pulsed magnetic fields. Our chambers were the largest that could be made using existing isostatic presses. About half of the vacuum surfaces were ground to achieve desired dimensions. Surface finish on the remaining surfaces was left "as fired." Our initial chambers were of ceramic with 85% alumina content, which was easier to grind and allowed earlier procurement than ceramics of higher alumina content. However, we are now considering higher (up to 96%) alumina content because of improved surface finish and (probably) lower outgassing rate, even though it is somewhat more expensive.

Several styles of vacuum joints have been used with the ceramic chambers. Gaskets of Viton elastomer have been employed for demountable joints. Very smooth surfaces (≈ 8-μin. roughness obtained by diamond dust lapping) and substantial compression (≈ 27%) are required for reliable Viton sealing. Viton joints sealed for a long time tend to bond and are difficult to open. Flooding with alcohol helps. Some permanent joints were made by the manufacturer (Coors Porcelain Co.) using a proprietary high-temperature fusion process prior to grinding. Other permanent joints were made at assembly by use of a commercial vacuum sealant (Torr Seal by Varian Assoc.), which demonstrated mechanical and vacuum integrity with low outgassing rates and permits 150°C bakeout temperatures.

Ceramic chamber-wall thickness opposite coil 3 was at a premium in the Berkeley Compressor 3 (Fig. 1).[2] The gap between coils 3 needed to be small. Otherwise the excitation required in the left member of coil set 3, in order to eject the compressed electron ring, would be so great as to exceed the available energy storage and possibly exceed the mechanical strength of the coil. In contrast, a large internal gap between vacuum chamber walls was desired to facilitate passage of the electron ring during compression. Thus, there was a pressing need to make the ceramic chamber adjacent to coil set 3 as thin as practicable.

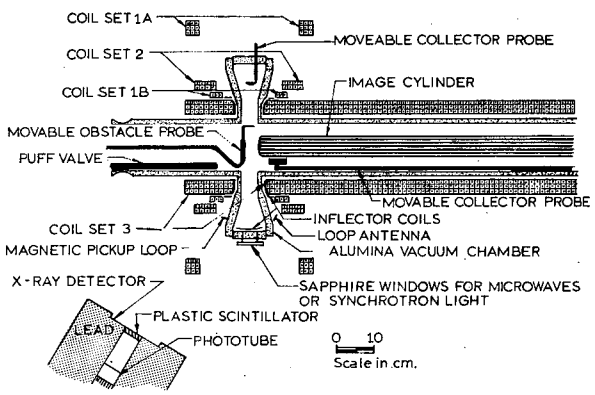

Fig. 1. Compressor 3. (Except for details, Compressor 5 is same.) Designed to form, extract, and modestly accelerate electron rings.

The complex geometry (similar to a conical washer attached to a tube) did not readily permit accurate analytical assessment of stress levels and stress-concentration effects in the ceramic. Consequently, these were determined experimentally on a full-sized metal model (successively machined to thinner wall) by use of brittle lacquer and strain gages. The chosen thickness of 0.79 cm provided a safety factor of 7 relative to typical tensile strength. Proof tests on the ceramic parts substantiated a safety factor > 4.

"Gozinta" - "Gozouta" Evolution

The vacuum-chamber wall is a ceramic ring with six large ports. Viton O rings in grooves in the 1/8-in.-thick curved stainless-steel covers provide vacuum sealing. This system worked well on the four lower ports, but was troublesome on the "Gozinta" and "Gozouta" port covers, where housing structure stiffened the curved plates.

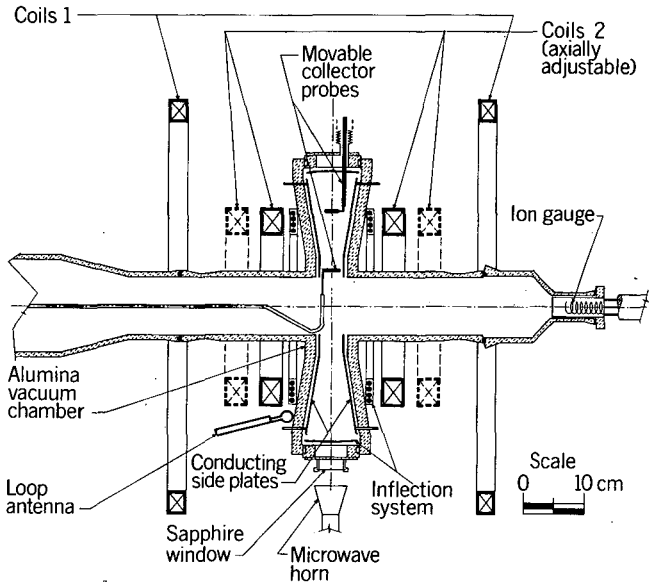

ERA COMPRESSOR 4

Fig. 2. Compressor 4. Used to study beam instabilities immediately after injection. Note that coils 3 are missing.

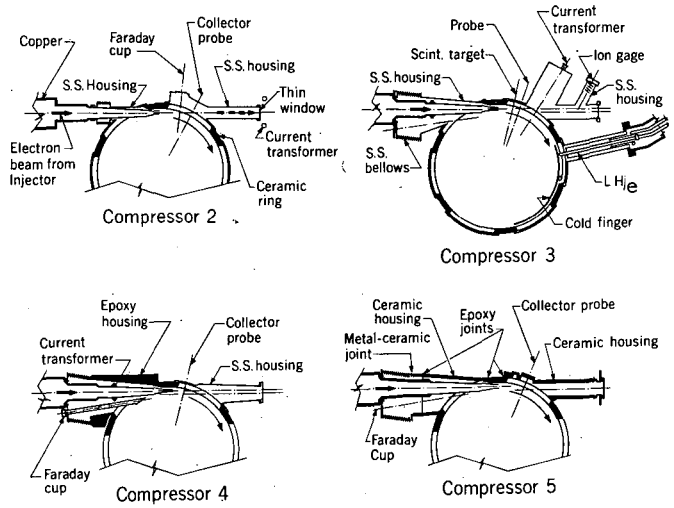

Fig. 3. "Gozinta"-"Gozouta" evolution.

As shown in Fig. 3, Compressor 2 had only a modest housing rather snugly fitted about the snout proper. (The "Gozinta snout" is a 0.040-in.-wall pure iron tube with copper plating tailored to minimize magnetic field perturbations at the instant of injection.) This system worked well. For Compressor 3 this housing was expanded to accommodate Faraday cup instrumentation just below the snout. A large bellows was also provided to facilitate raising or lowering the compressor ± 1 cm, allowing change of injection radius. This curved-port vacuum seal was subject to leaks; it could be disturbed by baking to 125°C or by adjustments to beam line. In addition, the large stainless steel housing caused eddy-current perturbations. Downstream, the Gozouta vacuum seal was particularly troublesome. The Viton gasket became hardened to the square of the groove on the lower section. This was attributed to radiation damage.

The Compressor 4 Gozinta housing was cast from epoxy to eliminate eddy currents. Vacuum sealing is still a Viton O ring in a groove in the epoxy. The system has been serviceable partly because vacuum requirements are modest for this particular experiment--low 10^{-6} torr range. The Gozouta gasket was extended another 1 in. along the downward side, which brings the 3/4-in.-thick ceramic ring into service as a radiation shield. No further radiation damage has been experienced.

Compressor 5, a modification of Compressor 3, is again designed for ultravacuum operation, $< 5 \times 10^{-9}$ torr. Gozinta and Gozouta housings are now the same material as the ring--85% alumina. An outboard ceramic subflange is metallized and brazed to a stainless steel adapter plate. This subflange is Torr Seal bonded to the Gozinta housing, and both Gozinta and Gozouta housings are cemented to the vacuum chamber ring--also with Torr Seal. Thus, the troublesome elastomer seals have been eliminated in this region.

Helium-Cooled Cold Surface

Condensation vacuum pumping was achieved in Compressor 3 by installing a liquid-helium-cooled "cold finger" (Fig. 3). This cold surface reduced the pressure approximately one decade and, in tests, operated into the 10^{-10} torr range.

The cold finger had about 46 in.^{2} of surface area and was made of copper 0.032 in. x 1.75 in. in cross section and 14.4 in. long. Emissivity was brought to 0.01 to 0.025 by gold plating 0.0002 to 0.0003 in. thick. Liquid helium was contained in a 1/2-in. o.d. copper tube loop of 11 in.^{2} heat-transfer area, hard soldered to the cold finger; the tube also served as the support. The calculated maximum temperature of the cold surface was 20°K and occurred at the lower tip. The lowest temperature, at the support, was very near liquid helium temperature of 4.2°K.

Because of space limitations, and because the operating life of the experiment was to be short and hence high rates of helium usage could be tolerated, no radiation heat shields were employed. The 4°K cold surface looked directly at room temperature surroundings. However, a liquid-nitrogen-cooled intermediate point of the mechanical support intercepted and reduced conduction heat loads. The static heat leak of the helium system was measured at 2 liters/hr increasing to 3 liters/hr with pulsing of Compressor 3 coils.

Liquid helium was gravity fed from the bottom of an external reservoir, and cold helium gas was returned to the top of this reservoir. Transfer lines were about 60 in. long and covered with 10 layers of aluminized Mylar. The insulated liquid-helium line, together with liquid-nitrogen lines for removing heat at the support, were housed in a 3.5-in.-diameter evacuated aluminum pipe. A magnehelic liquid level gauge at the reservoir was remotely monitored by closed-circuit television.

Pulsed magnetic fields produced much higher than usual eddy currents in the copper finger due to reduced resistivity at liquid-helium temperature. Fields from the eddy currents, reacting with the compressor magnetic field, excited mechanical vibrations of about

0.12 in. peak-to-peak, with a frequency of 2 Hz. The motion disappeared in approximately 1 sec. In future configurations, this cold surface will probably be arranged on the axis of the compressor.

Vacuum Performance

Base pressure (torr) achieved in Compressors 2 and 3 under various operating conditions was:

	Without bake	After bake	+ Cold finger
Compressor 2	$\approx 10^{-7}$	---	---
Vacuum pretests	$\approx 10^{-7}$	5×10^{-9} (a)	5×10^{-10} (b)
Compressor 3	2×10^{-7}	3×10^{-7} (c)	3×10^{-8} (d)

Notes: (a) 9 days @ 140°C. (b) 59 in.^{2} @ 4°K after bake. (c) Includes several leaks partially fixed by sealants and guardvac; without leaks would have achieved $\approx 10^{-8}$ torr. (d) Same as (c) plus 57 in.^{2} @ 4-20°K.

Conducting Side Walls

Side walls of the vacuum chamber are ceramic and close to the electron ring. To drain electric charge, a conductive coating is necessary. In Compressor 2, these walls were evaporation-coated with 300 - 500 Å of nickel. After several weeks of service this coating was found to be broken up into insulated islands. Compressor 3 side walls were gold-coated to ≈ 150 ohms/square. Again the coating broke up into insulated islands after a period of operation.

Recent calculations indicate that specific geometric patterns of conductive material on the walls may assist in suppressing beam instabilities. To facilitate testing numerous configurations in Compressor 4, the coatings are now supplied on 0.005-in. "Kapton"* liners for the side plates. Test chamber observations disclose that, after baking at 150°C, these side plates can be pumped down into the 10^{-10} torr range, and thus would also be serviceable for Compressor 5. Coatings of Nichrome V and gold have been tried. The 250 Å gold coatings (3 - 5 ohms/square) break up quickly in service, presenting the appearance of being scrubbed by a household scouring pad. It is presumed induced voltage from the inflector causes arcing and evaporation of the coating at incipient faults. Bench tests confirm this. Nichrome coatings 800 - 1000 Å (30 - 100 ohms/square), do not show this damage. Heavy coatings of Nichrome (3000 Å) break up into insulated islands during coating. A two-ply coating (800 Å Nichrome overlaid by 200 Å of gold) allowed low resistivities (4 ohms/square), and the gold survived for days instead of hours. Coating thickness can be closely controlled (3%), but resistivities for the same thickness of coat vary by factors of 2 to 3. It is apparently necessary to deposit approximately 150 Å of material to even out the hills and valleys of the Kapton surface before resistive continuity appears. Development is continuing.

*Polyimide film

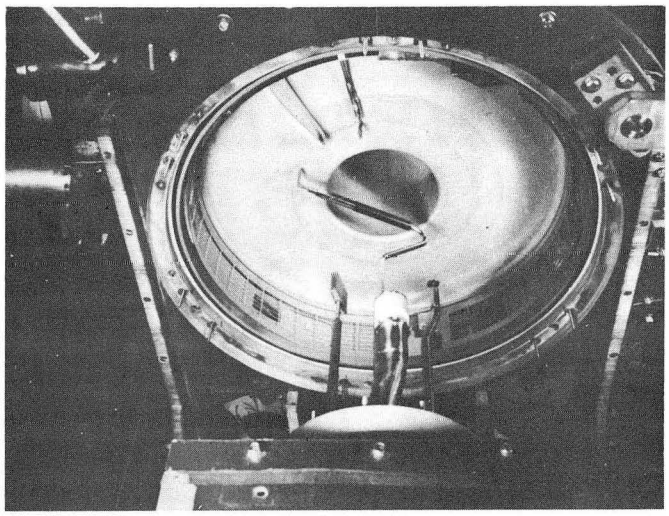

Fig. 4. Left-hand side probes and diagnostics.

The LRL developmental compressors utilize a multitude of diagnostic devices to assist in understanding the behavior of electron-ring phenomena. For instance, more than 20 movable diagnostic devices are incorporated within the vacuum system of a typical compressor. Reliable vacuum sealing of these many devices has absorbed much effort.

Diagnostic Probes

Figure 4 shows the left-side plate moved away, exposing the inside of the compressor 3 vacuum chamber. Gozinta (injected beam entrance) is at the upper right. On the axis is the Rising Stem Probe (RSP), an obstacle probe later modified to also collect current. RSP has radial extension-contraction, azimuthal rotation, and axial motions. Just over the RSP is the white tip of the cold electron collector. To the left is an antenna loop, to the right a capacitor pickup electrode. All three devices have rotational and axial motion. Not shown below RSP is the Puff Valve for introducing hydrogen. Top left is the "horsecollar" current transformer. Just to the right of it is the radial flag current-collector probe. Both devices have radial and rotational motions. Just visible inside the vacuum ring at upper right is the "first turn" Faraday cup. Perforated metal near the circular wall is the inflector electrode. To the left under the inflector is the "cold finger." All motions are remotely actuated with remote position indication. Sixty-five interlocks limit motions and prevent interferences. Linear motions have stainless steel bellows vacuum seals. Rotational motions are sealed by Viton O rings.

References

*Work supported by the U. S. Atomic Energy Commission.

1. R. Avery, H.P. Hernandez, R. Reimers, and W. Salsig, "Mechanical Design of Compressor Test Apparatus for Electron Ring Accelerator Research," IEEE Trans. Nucl. Sci. NS-16 [3], 1050 (1969).
2. D. Keefe, "Research on the Electron Ring Accelerator," Particle Accelerators 1 [1], 1 (1970).

LEGAL NOTICE

This report was prepared as an account of work sponsored by the United States Government. Neither the United States nor the United States Atomic Energy Commission, nor any of their employees, nor any of their contractors, subcontractors, or their employees, makes any warranty, express or implied, or assumes any legal liability or responsibility for the accuracy, completeness or usefulness of any information, apparatus, product or process disclosed, or represents that its use would not infringe privately owned rights.

TECHNICAL INFORMATION DIVISION
LAWRENCE RADIATION LABORATORY
UNIVERSITY OF CALIFORNIA
BERKELEY, CALIFORNIA 94720