UCRL 201
cy. 2

UNIVERSITY OF CALIFORNIA

Radiation Laboratory

TWO-WEEK LOAN COPY

This is a Library Circulating Copy which may be borrowed for two weeks. For a personal retention copy, call Tech. Info. Division, Ext. 5545

BERKELEY, CALIFORNIA

DISCLAIMER

This document was prepared as an account of work sponsored by the United States Government. While this document is believed to contain correct information, neither the United States Government nor any agency thereof, nor the Regents of the University of California, nor any of their employees, makes any warranty, express or implied, or assumes any legal responsibility for the accuracy, completeness, or usefulness of any information, apparatus, product, or process disclosed, or represents that its use would not infringe privately owned rights. Reference herein to any specific commercial product, process, or service by its trade name, trademark, manufacturer, or otherwise, does not necessarily constitute or imply its endorsement, recommendation, or favoring by the United States Government or any agency thereof, or the Regents of the University of California. The views and opinions of authors expressed herein do not necessarily state or reflect those of the United States Government or any agency thereof or the Regents of the University of California.

UCRL 201
cy. 2

UNIVERSITY OF CALIFORNIA

Radiation Laboratory

TWO-WEEK LOAN COPY

This is a Library Circulating Copy which may be borrowed for two weeks. For a personal retention copy, call Tech. Info. Division, Ext. 5545

BERKELEY, CALIFORNIA

UCRL-201

Physics-General

cy 2

~~Rev D 9/20/~~

~~7/10~~

UNCLASSIFIED

UNIVERSITY OF CALIFORNIA

Radiation Laboratory

INFORMATION DIVISION
RADIATION LABORATORY
UNIVERSITY OF CALIFORNIA
BERKELEY, CALIFORNIA

Contract No. W-7405-eng-48

N^{17}, A DELAYED NEUTRON EMITTER

L. W. Alvarez

November 5, 1948

Berkeley, California

Standard Distribution	Copy Nos.
Argonne National Laboratory	1-8
Armed Forces Special Weapons Project	9
Atomic Energy Commission, Washington	10-11
Battelle Memorial Institute	12
Brookhaven National Laboratory	13-20
Bureau of Ships	21
Carbide & Carbon Chemicals Corp. (K-25 Plant)	22-25
Carbide & Carbon Chemicals Corp. (Y-12 Plant)	26-29
Columbia University (Dunning)	30
General Electric Company, Richland	31-34
Hanford Operations Office	35
Iowa State College	36
Knolls Atomic Power Laboratory	37-40
Los Alamos	41-43
Mound Laboratory	44-45
National Bureau of Standards	46-47
Naval Radiological Defense Laboratory	48
NEPA Project	49
New York Operations Office	50-51
North American Aviation, Inc.	52
Oak Ridge National Laboratory	53-60
Patent Advisor, Washington	61
Sandia Base	62-63
Technical Information Division, ORDO	64-78
UCLA Medical Research Laboratory (Warren)	79
University of California Radiation Laboratory	80-84
University of Rochester	85-86
Declassification Procedure	
Declassification Officer	87-90
Publications Officer	91
Patent Department	92-93
E. O. Lawrence	94
Area Manager	95
Information Division	96
Total	96

Information Division, Radiation Laboratory
University of California, Berkeley, California

N^{17}, A Delayed Neutron Emitter

L. W. Alvarez

November 5, 1948

ABSTRACT

The decay scheme of a 4.2 second neutron emitter has been investigated in detail. Chemical and physical evidence shows that it is N^{17}, which emits beta rays to a broad excited state of O^{17}, which then breaks up into a neutron plus O^{16}. The energy spectrum of the neutrons is determined by measuring the energies of the O^{16} recoils in a proportional counter. The neutrons have a most probable energy of 0.9 Mev, a "half width" of less than .5 Mev, and an upper limit of about 2 Mev. β-recoil coincidences are observed, as predicted by the Bohr-Wheeler theory, and the β-ray energy is measured by absorption. The beta rays in coincidence with neutrons have an upper limit of 3.7 $\pm$0.2 Mev. Beta-rays directly to the ground state of O^{17} are not observed because of high background effects, but should have an energy of 8.7 Mev. Some evidence is presented to show that energy is conserved in the β-n transition through the broad excited state in O^{17}.

N^{17}, A Delayed Neutron Emitter

L. W. Alvarez

Introduction

Shortly after the discovery of fission, Roberts, Meyer and Wang[1] reported that neutrons were emitted from neutron-bombarded uranium, with a period of approximately 12 seconds. Later work[2] showed that 6 separate half-lives could be identified among the delayed neutron emitters. The accepted values of these periods in seconds are 55.6, 22.0, 4.51, 1.52, 0.43 and 0.05. Bohr and Wheeler[3] postulated the generally accepted theory that the neutron-active substances were actually exceedingly short-lived daughters in equilibrium with their beta active parents. The measured periods should then be those of the parents.

In the three cases where chemical identification of the neutron activity has been made[4], a beta active fission product of the same period was already known in the same element. This lent strong support to the Bohr-Wheeler hypothesis, but the experimental demonstration of β-n coincidences was lacking.

E. O. Lawrence and coworkers[5] recently found a 4.2 second neutron period among the light elements, the first such activity reported outside the field of fission physics. The work described below was started as an attempt to identify the element responsible for the delay. The techniques developed for that purpose, however, led to the possibility of studying the decay scheme of the radioactive transformation in some detail.

Chemical Identification

The 4.2 second period was found to be produced in greatest intensity by the reaction of deuterons on fluorine. Deuteron bombardment of elements beyond fluorine gave the same activity with smaller intensities. (The dependence of the yield on the isotopic properties of the bombarded element has been investigated in detail by Chupp and McMillan[6]).

It seemed reasonable to assume that the activity could be swept out of a fluoride solution by a gas stream, as it was probably C, O, or N.

In the first test, NH_4F in water solution was bombarded with 190 Mev deuterons. The external beam of the 184" cyclotron was used for this purpose. Helium was used as the carrier gas, and the neutron activity could be detected in a re-entrant BF_3 chamber ten meters from the bombarded solution. The activity was carried by the He stream, through a rubber tube, to the counter. The cyclotron was turned off after a twenty second bombardment, and the number of neutron counts in a twenty second interval was recorded as the "intensity".

To investigate the possibility that the 4.2 second period was carried as CO, or CO_2, the apparatus shown in Figure 1 was used. Helium gas carrying the activity was passed through two tubes containing Ascarite, a commercially available CO_2 absorber. After passing through hot CuO, to convert CO to CO_2, the gas stream entered two more Ascarite tubes before reaching the BF_3 chamber. The neutron intensity was the same as that recorded in the absence of the Ascarite. This gave a strong indication that the activity was not carbon.

To prove that tracer quantities of CO_2 were stopped in Ascarite, and tracer quantities of CO were oxidized to CO_2 on hot CuO, the activities in the four Ascarite tubes were measured. Strong samples of C^{11} were found in Ascarite tubes I and III, and negligible C^{11} was observed in tubes II and IV. This proves the efficacy of the system for stopping tracer amounts of carbon, and eliminates the possibility that the neutron delay could be attributable to a carbon isotope.

A similar test was made for oxygen. The gas was passed over hot copper before entering the BF_3 chamber. No change in activity was observed, indicating that oxygen was not responsible for the delay. O^{15}, a radioactive isotope with 125 second half-life was used to check the efficiency of this system. The O^{15} activity could be detected at the entrance end of the tube containing the hot copper, but not at the exit end. In addition to the radioactive evidence, a black deposit of CuO could be seen at the entrance end,

but not at the exit. The tank helium used as the sweeping gas contained enough oxygen impurity to give a macroscopic chemical check on the performance of the system.

By the time these tests had been completed, others in the laboratory had shown by cross-bombardment that the active isotope responsible for the delay had 10 neutrons in its nucleus. The experimental evidence was that the 4.2 sec period was found in F + p, but not in O + d, except a trace due to O^{17}. This eliminated the necessity of checking fluorine or neon as possible elements, since F^{19} and Ne^{20} are stable. But neon had already been ruled out when it was noted that the activity was held up in charcoal cooled to liquid air temperature, even though the 20 second Ne^{19} passed through. The only gaseous substance which could carry the neutron activity was therefore nitrogen. The fact that it passed through active charcoal at room temperature, but not at 90° K lent strong support to this deduction. The conclusion therefore comes largely from a process of elimination, but it seems quite conclusive. The nuclear evidence supports it strongly and there is little question that even without any chemical work at all, the activity would have been assigned to N^{17}.

Detection of O^{16} Recoils

On the basis of the Bohr-Wheeler theory, N^{17} is a beta emitter of 4.2 second half-life, which decays to O^{17} in an excited state. The excited state has a mass greater than the sum of O^{16} plus a neutron, so the neutron is emitted before the excited O^{17} can radiate a gamma ray to the ground state of O^{17}. Presumably some of the beta transitions are to the ground state of O^{17}, and so are not followed by neutron emission. If this picture is correct, the neutron and O^{16} nucleus should carry equal and opposite momenta when the O^{17*} splits apart. Preliminary and unpublished absorption measurements of the delayed neutrons, by Nag and Thornton, had shown that the energies were of the order of 1 Mev. The O^{16} recoils should therefore carry away 1/16 Mev, or about 60 Kev. These recoil nuclei would have enough energy to be observed in a proportional counter. If their energies could be measured, the energy distribution of the neutrons would be known. Such a method of neutron energy measurement has a great advantage over the usual proton

recoil method, where a neutron "line" produces proton recoils with energies from zero to the neutron line energy. The proton energy spectrum is flat between these limits. Therefore to deduce an original neutron spectrum, one has to differentiate the proton energy spectrum. (Cloud chamber techniques eliminate this difficulty, but introduce others). But in the case of the O^{16} recoils, the neutron energy is always 16 times the recoil energy, since the angle between the two particles is always 180°. Therefore no differentiation of the recoil spectrum is necessary. Unfortunately the method seems applicable only to delayed neutron emitters of high energy and low mass, the only known case of which is N^{17}.

In the first experiments, a conventional copper-in-glass type Geiger counter was used. Two glass tubes were fitted to the glass cylinder, as inlet and outlet for the helium stream. The counter operated in the proportional region with a gas amplification of from 50 to 200, when the applied potential was in the neighborhood of 1000 volts. Pulses were amplified in a conventional linear amplifier, and fed through a discriminator to a scaling circuit. When the NH_4F solution was bombarded with 190 Mev deuterons, large pulses were observed in the proportional counter. They had a four second period, as measured by a "delay line" technique involving rubber tubes of different lengths, and were presumably the O^{16} recoils. Since these pulses were larger than any due to beta- or gamma-rays, it was possible to observe them while the cyclotron was operating. All the work described in the remainder of this report was performed with the continuous flow method, during actual bombardment of the NH_4F solution. Helium acted as both the sweeping and counting gas.

A preliminary investigation of the pulse height distribution, using a differential discriminator, showed that neutrons of energy up to about 2 Mev were emitted by O^{17*}. The number of pulses per unit energy interval was observed to increase continuously as the energy under investigation was lowered. This last result was reported at the 1948 Washington meeting of the APS. But it was soon found that at the lower discriminator settings, the proportional counter was also sensitive to electrons which lost a large amount of energy in traversing the length of the counter. When counters of smaller size were substi-

tuted for the original one, the pulse size distribution was found to have a maximum in the neighborhood of 60 Kev, indicating a maximum in the neutron distribution at about 1 Mev. The effect of electron pulses was also minimized by the coincidence technique described below. The most reliable neutron distributions were measured in coincidence with the β-rays, and will be described in the next section. (See Fig.3).

It is interesting to note that the recoil counting rate through the differential discriminator was so high that the presence of the peak in the neutron distribution could be demonstrated aurally. A mechanical register connected to the terminals of a scale of 64 would produce "clicks" at a rather uniform rate of several per second when the differential discriminator was set to count recoils from 1 Mev neutrons. As the bias control knob was turned to give either higher or lower voltage settings, the decrease in the rate of clicks was immediately apparent. One could "tune across the line," and set on the peak merely by listening to the frequency of the mechanical register.

Recoil-Beta Coincidence Measurements

Several attempts to detect the N^{17} beta-rays were made in this laboratory, but no 4.2 second period was observed with ordinary counting techniques. So much N^{16}, of 8 second half-life is produced at the same time as the N^{17}, that the 4.2 second period was always masked. Since no chemical separation would help, it was felt for some time that the N^{17} beta-rays, as predicted by the Bohr-Wheeler theory, were unobservable. But the observation of the O^{16} recoils made it possible to identify the N^{17} beta-rays in the strong background, by coincidence techniques. The equipment shown in Figure 2 was used for this purpose. A ring of six thin-walled, silvered-glass Geiger counters was placed around the thin copper-walled proportional counter which detected the O^{16} recoils. Coincident discharges of the two types of counter were observed. Absorption measurements on the beta-rays could be made by placing cylinders of aluminum around the proportional counter. (Fig.4; ignore the dotted lines for the moment).

The system was calibrated in terms of the P^{32} beta-rays, and a Feather analysis of the data gave an upper limit of the N^{17} beta-rays equal to 3.7 ± 0.2 Mev. The Feather

plot was horizontal, giving the same value of the end point at all values of the absorber thickness, so the extrapolation may be considered reliable. It should be pointed out that the beta-rays observed are only those from N^{17} to the excited state of O^{17}. Those to the ground state of O^{17} are not accompanied by an O^{16} recoil, and so are not detectable by this technique. However, their energy may be computed from other data.

When the solid angle of beta-ray counters was computed, and the recoil-beta-ray counting rate was corrected for this factor, it was found that within an uncertainty of about 10 percent, every recoil was accompanied by a beta-ray. This seems a rather convincing confirmation of the Bohr-Wheeler theory.

The neutron distribution was remeasured in the coincidence technique, and the results are shown in Fig. 3. In order to make a large ionization pulse in the proportional counter, an electron must be directed axially. But in this case, it cannot be counted in one of the Geiger counters. It is for this reason that the neutron distribution curve can be carried to somewhat lower energies than without the coincidence technique.

The proportional counter was calibrated in two ways, and the energy scale of the neutron distribution was not significantly different in the two cases. In the first method, alpha-particles from a thick source were directed across the diameter of the counter from an external position. There is a maximum energy which an alpha-particle can lose in crossing the counter, which corresponds to a point on the range-energy curve with minimum slope (maximum dE/dx). This energy loss is about ten times greater than the average recoil energy. Calibrated attenuators and a signal generator were used in a straight-forward manner to give the energy corresponding to various pulse heights in the case of the recoils. The linearity of the amplifier was checked before and after each neutron distribution run. Experiments were made with various gas multiplications, and some measurements were made using He from which the oxygen had been removed by passage through active charcoal at 90° K. In the latter case, the counting voltage was dropped from the normal 1000 volts to 600 volts. The measured neutron spectrum was the same in all cases. Finally argon was used as the sweeping and counting gas, and the end point of the

neutron spectrum was checked. The higher stopping power of argon made the electron counts larger, so nothing but the high energy portion of the curve could be measured.

A number of workers have shown that under more conventional circumstances, very reliable energy distributions are obtainable, but there might be some doubt that a proportional counter operated under such unusual conditions would give reliable data. The calibration experiments with the present helium filled counter show that it would be quite impossible for the spectrum shown in Figure 3 to have been observed if there were a sharp neutron line at 1 Mev. The alpha-particle experiment gave a sharp upper-limit energy-loss cut-off. That this cut-off was not in error by a factor of two could be shown by a comparison with the other method of calibration of the counter. This latter method was used in most of the work, and was very convenient.

A thin layer of Pu^{239} was deposited on the central wire of the counter, through the courtesy of Dr. B. B. Cunningham. The strength was such as to give several hundred counts per minute. Since the layer was thin compared to the alpha-particle range, there was a certain minimum energy loss in the counter, which an α-particle could suffer. No alpha-particle could lose less energy than one which was directed radially away from the wire. This energy loss is easily calculable, and is fortunately just higher than the maximum O^{16} recoil energy. The energy scale of the recoil pulses could then be established by a calibration point involving a minimum size alpha-particle pulse. Since the neutron spectra obtained with both methods of calibration (maximum and minimum α-pulse size) agreed within 10 percent, it is safe to conclude that the proportional counter was giving pulses proportional to the energy released in the gas, in the usual manner. A further check on this point comes from recent cloud chamber measurements of Dr. Evans Hayward, in this laboratory, who finds a neutron spectrum in general agreement with that reported here. Her work was done in a hydrogen filled cloud chamber, and only those tracks within $\pm 30^{\circ}$ of the forward direction were measured. The resulting neutron spectrum has a peak at 1 Mev, and extends up to 2 Mev. However, the width of the peak at half maximum is only about 0.2 Mev. This is sharper than the line observed with the proportion-

al counter, even when reasonable corrections for resolving power are made. The observed width in these experiments is 0.6 Mev, and from the energy width of the differential discriminator, one would correct that to approximately 0.4 Mev. It is apparent from Mrs. Hayward's work, that the atmospheric helium counter is not as satisfactory as the Argon-Methane counter usually used for precision energy measurements.

Disintegration Scheme

Figure 5 shows the proposed scheme for the disintegration of N^{17}. The rest energies of O^{16}, O^{17} and the neutron are known. The energies of the excited level in O^{17}, and the ground state of N^{17} are determined by the neutron and beta energies measured. The energy of the unobserved beta-ray from N^{17} to the ground state of O^{17} is computed from the known data. This transition must be at least twice forbidden (third Sargent curve) since its energy is 8.7 Mev. If it were once forbidden, it would have a half-life of only about 3 seconds. A second forbidden β-transition of 8.7 Mev has a half-life of about 80 seconds. The branching ratio of the high energy β-rays would be 0.05 in this case, and gives a logical explanation for the failure to observe the N^{17} β-rays in the large background of N^{16} β-rays. Of course, it is quite possible that the branching ratio is smaller; 0.05 is merely an upper limit, if allowance is made for the scatter of experimental points on the Sargent diagram. An additional check on the fact that the branching ratio is small comes from a comparison of the observed 4.2 second half-life with the observed β-ray energy of 3.7 Mev. The first Sargent curve indicates that a 4.5 second half-life corresponds to an energy release of 3.7 Mev. The uncertainties in the end point measurement, and the scatter in the points on the Sargent curve are enough to explain the discrepancy between 4.5 and 4.2 seconds. But if the branching ratio were 50 percent, the effective half-life of the 3.7 Mev transition would have to be 8.4 seconds, which is outside the limits of error.

No gamma-rays were found in coincidence with the recoils, but accidental coincidence limited the search to the case of one gamma-ray accompanying each recoil. It is also highly unlikely on theoretical grounds that a gamma-ray could be emitted in this process, as the neutron width is of the order of a hundred kilovolts. Gamma-ray widths are always very

much narrower, so gamma-ray emission could not compete effectively with neutron emission.

Correlation of Beta and Neutron Energies

Since the energy available in the transition from N^{17} to O^{16} + n is fixed, higher than average energy neutrons should be accompanied by a lower than average energy beta-ray distribution. An attempt was made to detect this effect, but no really conclusive evidence was found, due to background effects at large β-ray absorber thicknesses. The absorption curve of β-rays in coincidence with neutrons of any energy above 0.5 Mev is shown as a solid line in Figure 4. Three additional curves were determined for β-rays in coincidence with three groups of neutrons, whose energies are shown in Figure 3, as shaded blocks. Within the statistical fluctuations, these curves were identical. It was therefore decided to concentrate on a single point at about 0.8 gms/cm^2, and determine the number of β-rays per recoil through that thickness, for the three neutron groups. The choice of 0.8 gms/cm^2 was a compromise between β-ray energy resolution, which requires data to be obtained close to the end point, and background effects, which require a counting rate somewhat above the accidental background. It was possible to carry the overall β-ray absorption curve to 1.15 gms/cm^2 for two reasons: (1) the real counting rate was greater because all recoils contributed to the effect, and (2) the accuracy required was considerably less than that needed to establish the differential effect under consideration in this section.

The results of several hours of counting are shown by the three points at about 0.8 gms/cm^2. The results are not conclusive, but if taken at face value, are consistent with the principle that energy is conserved in the overall transition. The highest energy neutrons are accompanied by the softest β-rays. But the lowest energy neutrons also appear to be in coincidence with β-rays somewhat softer than those accompanying the peak of the neutron distribution. But for these last two groups, the expected effect is smaller, and the points are closer together. If one considers the neutrons to have two average energies in the neighborhood of 1.6 Mev, and 0.8 Mev (the average of E_1 and E_2), then there would be only two points on the β-ray absorption diagram at 0.8 gms/cm^2. These two points would be spaced apart by 4.5 times the probable error of the low point, and 7 times

the probable error of the higher point, and would be displaced in the proper direction, but by a distance somewhat less than that calculated.

It is unfortunate that this interesting correlation could not have been established in a more clear cut manner, but since the background was due almost entirely to N^{16}, no method of eliminating it appeared possible. An attempt was made to use C_7F_{16} plus deuterons as a source of N^{17}, in the hope that the elimination of O^{16} (present in the water solution of NH_4F) would lower the N^{16} background. Very intense sources of N^{17} were prepared by circulating C_7F_{16} through the internal target of the 184" cyclotron. A centrifugal pump drove the liquid from the target to a counter-current scrubber outside the concrete shielding. Helium bubbled through the circulating liquid and carried the N^{17} to the usual proportional counter. The operation of the counter was rather erratic, and depended critically on the partial pressure of the C_7F_{16} vapor in the streaming helium. After a number of attempts to take reliable data with this system had failed, the method was abandoned. It is mentioned here because the technique of "pumping neutrons" from one point to another without high backgrounds of γ-rays might be of interest in other applications.

It is a pleasure to acknowledge a number of stimulating discussions of these problems with Professor Lawrence. Mr. Robert Thomas and Mr. Verne Ogren rendered valuable assistance in maintaining the electronic equipment and in taking data. The cooperation of the cyclotron crew is gratefully acknowledged. The work was supported by the Atomic Energy Commission under Contract No. W-7405-eng-48.

References

(1) R. B. Roberts, R. C. Meyer, and P. Wang, Phys. Rev., 55, 510 (1939).
(2) D. J. Hughes, J. Dalbs, A. Cahn and D. Hall, Phys. Rev., 73, 111 (1948).
(3) N. Bohr and J. A. Wheeler, Phys. Rev., 56, 426 (1939).
(4) A. H. Snell, J. S. Levinger, E. P. Meiners, M. B. Sampson, and R. G. Wilkinson, Phys. Rev., 72, 545 (1947).
N. Sugarman, Jour. Chem. Physics, 15, 544 (1947).
(5) K. Knable, E. O. Lawrence, C. E. Leith, B. J. Moyer and R. L. Thornton, Bull. Am. Phys. Soc., April 29, 1948.
(6) W. W. Chupp and E. M. McMillan, Bull. Am. Phys. Soc., April 29, 1948.

RLID:hw
11-5-48

Figure Captions

Fig. 1. Experimental arrangement for chemical work.

Fig. 2. Counter geometry

Fig. 3. Neutron spectrum uncorrected for resolving power of analyzer. (Recent cloud chamber work by Dr. Evans Hayward shows the peak and upper limit at the same neutron energies, but indicates that the peak has a full width at half maximum of the order of only 0.2 Mev.)

Fig. 4. Absorption of N^{17} beta rays in aluminum (solid line). For explanation of dotted lines and points at 0.85 gm/cm^2, see text.

Fig. 5. N^{17} disintegration scheme.

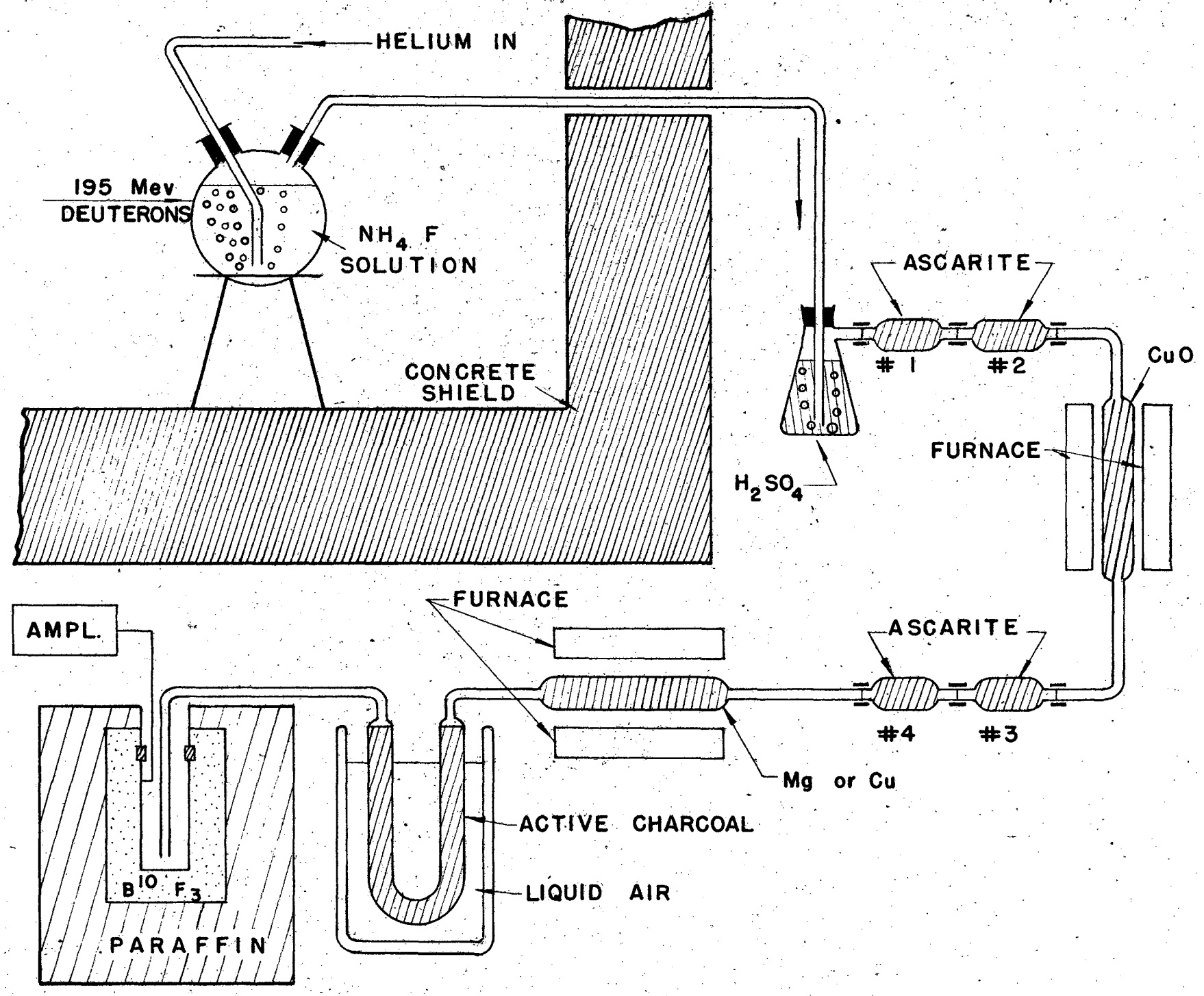
HELIUM IN
195 Mev
DEUTERONS
NH_4F
SOLUTION
CONCRETE
SHIELD
ASCARITE
#1
#2
CuO
FURNACE
H_2SO_4
FURNACE
AMPL.
ASCARITE
#4
#3
Mg or Cu
ACTIVE CHARCOAL
LIQUID AIR
$B^{10}F_3$
PARAFFIN

FIG. 1

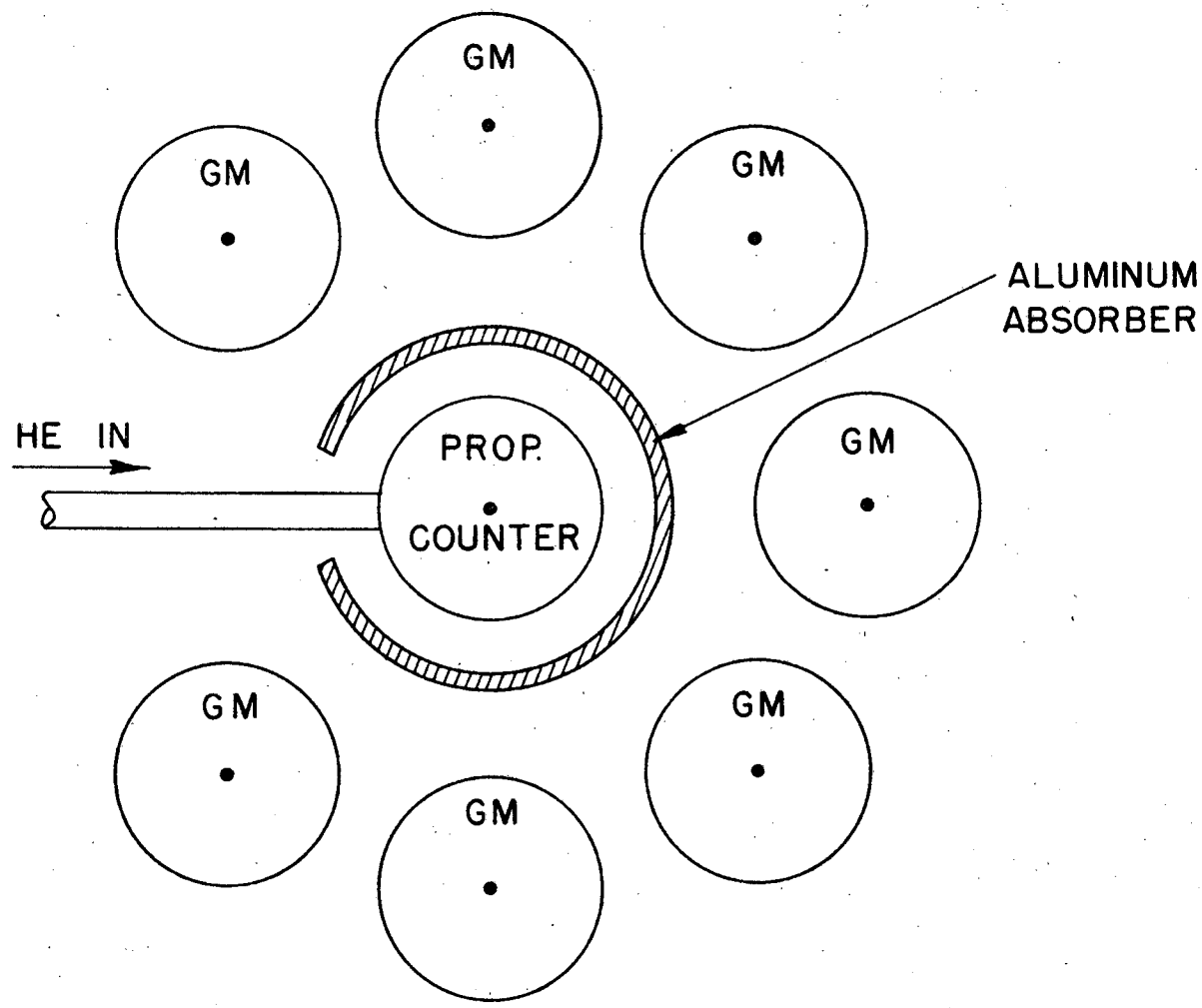

FIG. 2

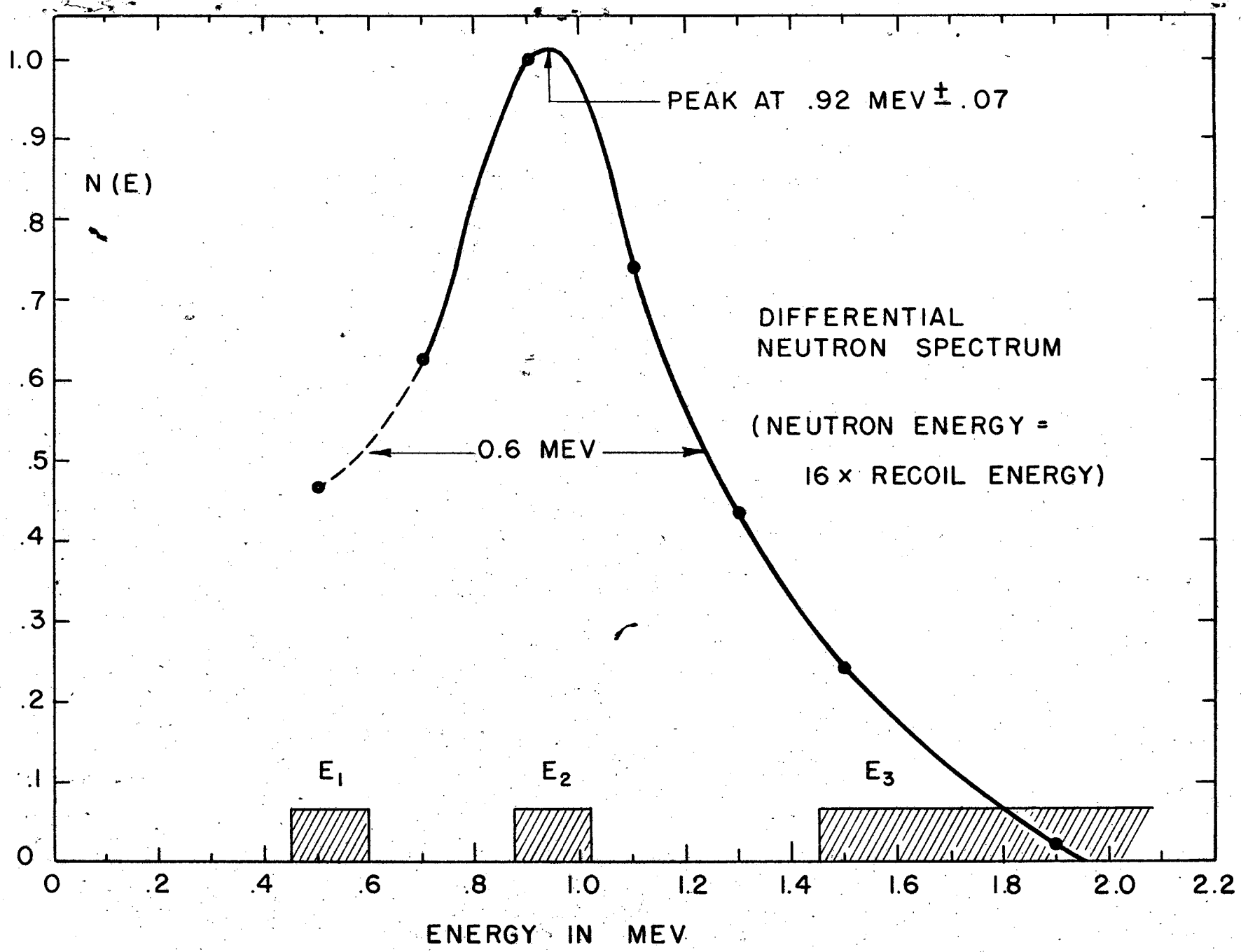
PEAK AT .92 MEV ± .07
N (E)
DIFFERENTIAL
NEUTRON SPECTRUM
(NEUTRON ENERGY =
16 × RECOIL ENERGY)
0.6 MEV
E1
E2
E3
1.0
.9
.8
.7
.6
.5
.4
.3
.2
.1
0
0
.2
.4
.6
.8
1.0
1.2
1.4
1.6
1.8
2.0
2.2
ENERGY IN MEV

FIG. 3

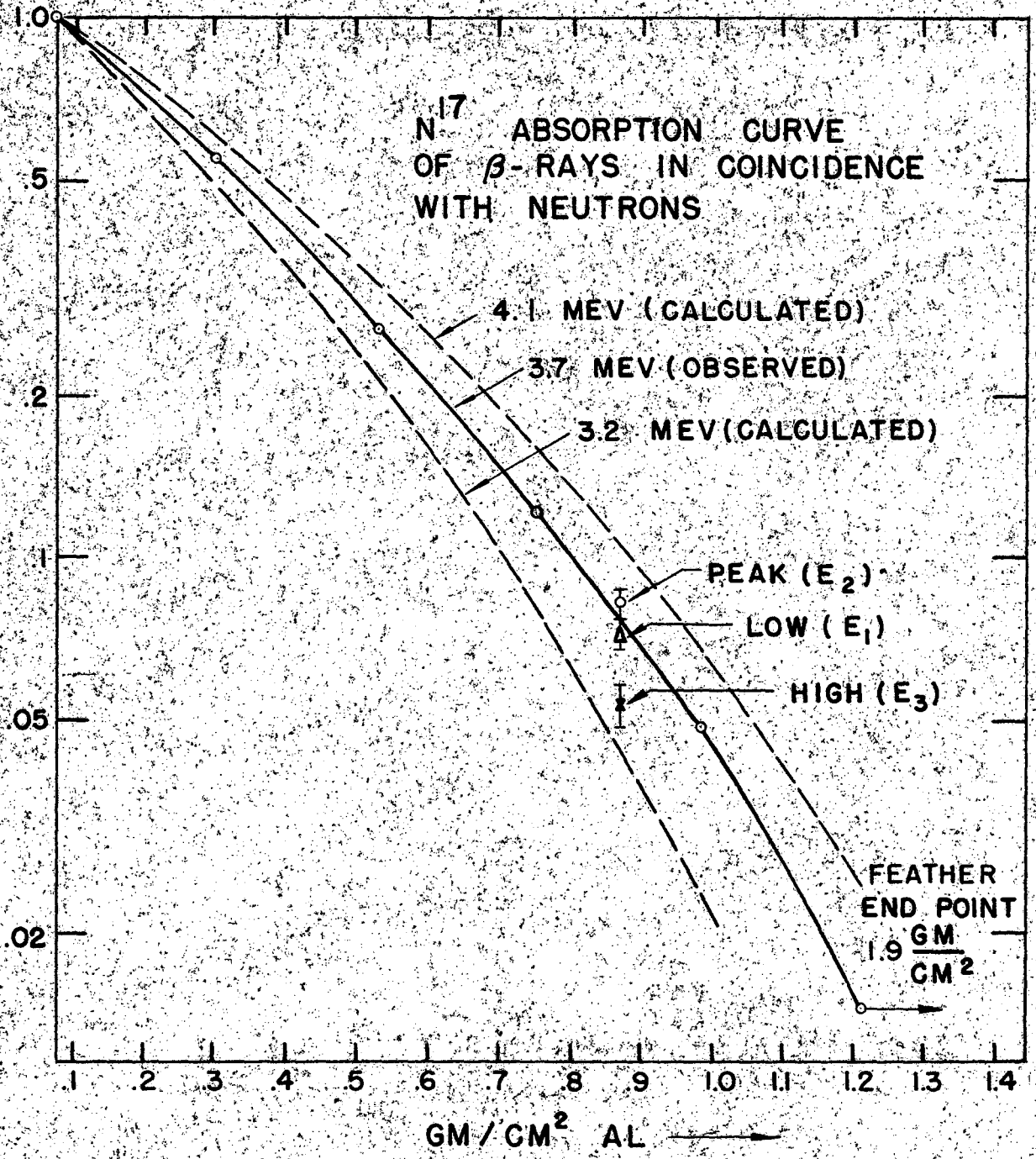
N^{17} ABSORPTION CURVE
OF β-RAYS IN COINCIDENCE
WITH NEUTRONS
4.1 MEV (CALCULATED)
3.7 MEV (OBSERVED)
3.2 MEV (CALCULATED)
PEAK (E_2)
LOW (E_1)
HIGH (E_3)
FEATHER
END POINT
1.9 $\frac{GM}{CM^2}$
1.0
.5
.2
.1
.05
.02
.1 .2 .3 .4 .5 .6 .7 .8 .9 1.0 1.1 1.2 1.3 1.4
GM / CM² AL

FIG. 4

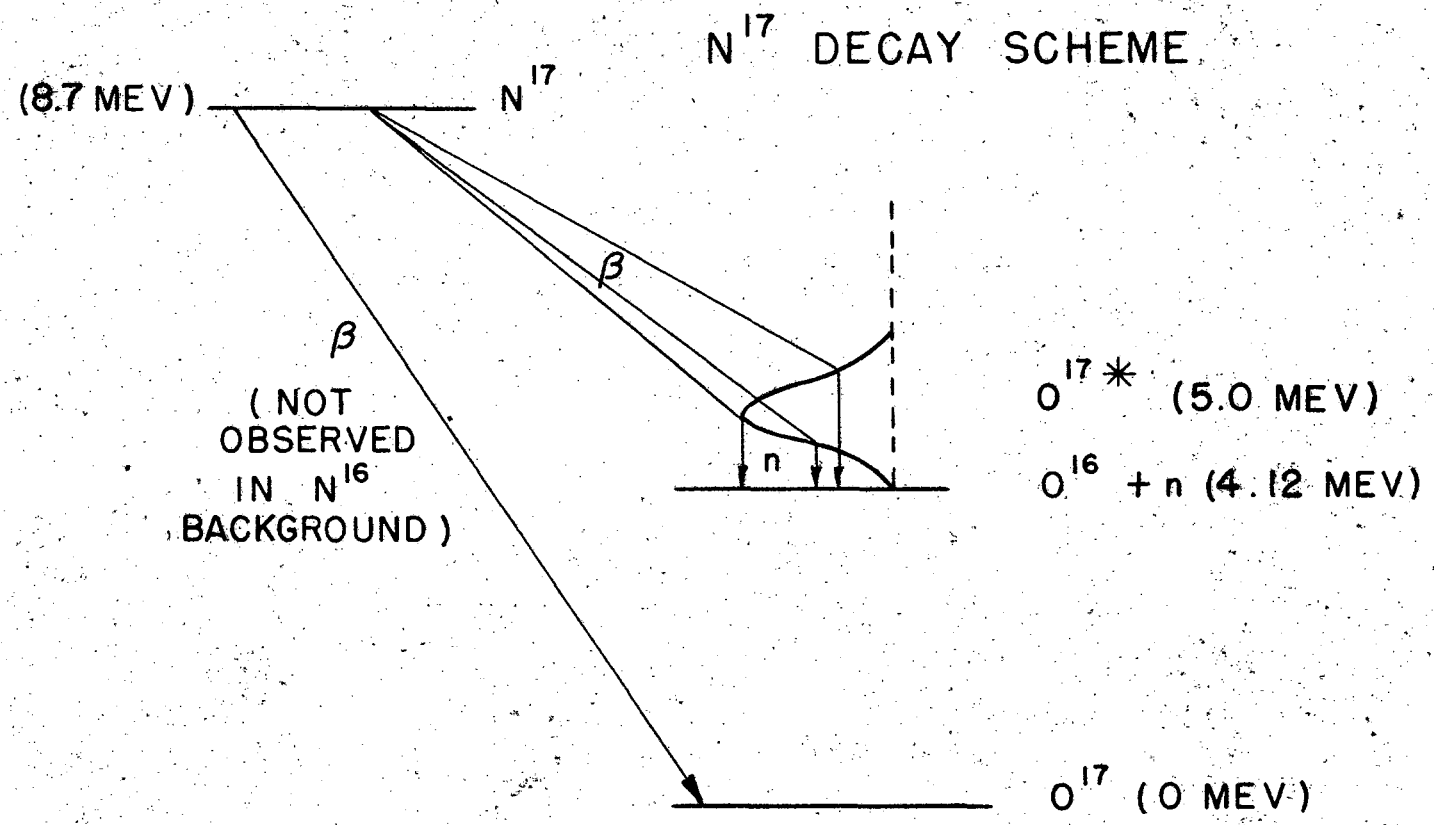
N17 DECAY SCHEME
(8.7 MEV)
N17
β
β
(NOT OBSERVED IN N16 BACKGROUND)
n
O17* (5.0 MEV)
O16 + n (4.12 MEV)
O17 (0 MEV)

FIG. 5