Submitted to Journal of the
Electrochemical Society

UCRL-20339
Preprint c.2

OXYGEN EVOLUTION IN HIGH RATE ANODIC METAL DISSOLUTION

K. Kinoshita, R. H. Muller and C. W. Tobias

December 1970

AEC Contract No. W-7405-eng-48

TWO-WEEK LOAN COPY

This is a Library Circulating Copy which may be borrowed for two weeks. For a personal retention copy, call Tech. Info. Division, Ext. 5545

LAWRENCE RADIATION LABORATORY
UNIVERSITY of CALIFORNIA BERKELEY

UCRL-20339 c.2

DISCLAIMER

This document was prepared as an account of work sponsored by the United States Government. While this document is believed to contain correct information, neither the United States Government nor any agency thereof, nor the Regents of the University of California, nor any of their employees, makes any warranty, express or implied, or assumes any legal responsibility for the accuracy, completeness, or usefulness of any information, apparatus, product, or process disclosed, or represents that its use would not infringe privately owned rights. Reference herein to any specific commercial product, process, or service by its trade name, trademark, manufacturer, or otherwise, does not necessarily constitute or imply its endorsement, recommendation, or favoring by the United States Government or any agency thereof, or the Regents of the University of California. The views and opinions of authors expressed herein do not necessarily state or reflect those of the United States Government or any agency thereof or the Regents of the University of California.

OXYGEN EVOLUTION IN HIGH RATE ANODIC METAL DISSOLUTION

K. Kinoshita*, R. H. Muller and C. W. Tobias

Inorganic Materials Research Division, Lawrence Radiation Laboratory and
Department of Chemical Engineering, University of California
Berkeley, California 94720

Anodic dissolution of metals at high current densities in the transpassive state may result in concurrent oxidation of the solvent, resulting in the evolution of oxygen. The current efficiency of metal dissolution, the solution composition in the boundary layer as well as the physical nature of the transport process would be affected by the simultaneous liberation of oxygen. In a recent study of the anodic dissolution of copper at high current densities into solutions of KCl, KNO_3, K_2SO_4 and Na ClO_3, neither direct visual observations of the interelectrode gap, nor high speed photography[5] revealed evidence of any gas evolution from the anode. Since the possibility exists, that some not entirely negligible amounts of oxygen may be carried away from the anode in solution, rather than in the form of bubbles, determination of dissolved oxygen in the effluent electrolyte is necessary to yield a definitive answer. In the following, a technique for the analysis of oxygen evolved under conditions similar to those of electromachining is described, and upper limits are established for the current efficiency of oxygen evolution when copper is dissolved in KNO_3, KCl and K_2SO_4 electrolytes at current densities up to 80 A/cm^2.

---

* Present address: Pratt and Whitney Aircraft Corp., Middletown, Connecticut 06457

Apparatus and Procedure

Electrolysis at high current densities requires high electrolyte flow velocities, consequently the concentration level of dissolved oxygen, can be expected to be quite low. Under experimental conditions listed in Table I, detection of oxygen evolved with 1% current efficiency requires an analytical technique with a sensitivity in the 50 parts per billion (by weight) range. As an oxygen sensor, a commercial polarographic type analyzer* was chosen. The oxygen-selective membrance of the sensor served to exclude other reducible compounds possibly present in the electrolyte. However, this membrane also contributes to the slow response, approximately 10 seconds, of the sensor. Therefore, instead of continuous monitoring of the effluent, samples were collected during steady state periods of electrolysis, and subjected to analysis after the conclusion of each run. The electrolysis runs were only of 0.4 - 12 seconds duration.

A compact electrolyte flow system was designed to minimize oxygen dilution and provide for the collection and analysis of specimens. The system is shown schematically in Fig. 1. A single stroke piston pump L (400 cc volume), driven by a variable speed motor** H serves to move electrolyte solution through the electrolysis cell C and into the open ended collection tube F, from where a specimen is later withdrawn into the oxygen analysis cell B. Electrolysis is started as soon as the pump has been set in motion. After a predetermined time, chosen for dissolution of a 50 micron copper layer, a relay switch simultaneously turns off the electrolysis current and changes the fast-acting 3-way solenoid valve*** G,

---

* Beckman model 778 analyzer with model 76365 sensor.

** Model JK3, Zero Max, Minneapolis, Minnesota 55408.

*** ASCO valves, switching time approximately 10 msec, Automatic Switch Co., Florham Park, New Jersey 07932.

to divert the electrolyte flow back into the storage vessel J. The electrolyte channel downstream from the electrolysis cell is of constant diameter to avoid liquid hold-up in dead volume pockets. In order to avoid dilution of the specimen due to the hydrodynamic boundary layer inside the flow channel, the point at which the sample is withdrawn from the collection coil F is located close to the electrolysis cell, but far enough removed to be unaffected by the finite switching time of the solenoid valve. A sufficiently long liquid plug remains unused in the collection coil to exclude possible oxygen diffusion from the open downstream end of the coil.

The electrolysis cell was constructed of epoxy resin. The copper anode A was embedded in a removable epoxy piece. It was mechanically polished on 600 grit emery paper before each experiment. Anode surfaces of 3x3 mm and 3.3x0.6 mm (short dimension parallel to the flow direction) have been used. The cathode E was made of a square copper rod of 3x3mm cross section and was also cast in an epoxy insert. The electrode separation of 0.5 mm was maintained by a "Teflon" spacer which also provided the side-walls of the 3 mm wide flow channel.

The oxygen analysis cell B is shown in detail in Fig. 2. During electrolysis, solution flows through channel I from the electrolysis cell to the collection coil. During this phase, needle valve E is in the open position, as shown in Fig. 2 and piston C is pushed down. Afterwards, a 3 ml sample of electrolyte is transferred to the measuring chamber D by raising piston D to the position shown in Fig. 2. This movement also frees the magnetic stirrer J, which provides the necessary circulation in front of the membrane of oxygen sensor A. To avoid liquid drainage and

possible gas leakage, the entry to the measuring chamber is sealed by the needle valve E during measurement. The oxygen consumed by the sensor during a measurement does not measurably decrease the oxygen concentration of the specimen.

In order to exclude the effect of atmospheric oxygen on the measurements, the whole experiment was contained in a nitrogen-purged glove box and all solutions were de-oxygenated by nitrogen-purging for several hours.

Calibration

The oxygen sensor employed requires a calibration in each application in order to relate the meter readings to the desired concentration units. This calibration was performed in the electrolysis and analysis system described. Known amounts of oxygen were introduced into the electrolyte stream by electrolysis. For this purpose the copper anode was replaced by a platinum anode of 0.03 cm^2 surface area. A typical calibration curve is shown in Fig. 3. In this test the meter controls were set to result in a reading of 6 for the highest current employed (30mA). Background readings were subtracted from results with the lower currents. Similar calibrations were performed for the other electrolytes and flow rates listed in Table I. Calibration in 2N KCl was not possible. It appears that due to the high overvoltage for oxygen evolution on smooth platinum (1.55 V for 1 A/cm^2),[6] chlorine evolution is the predominant anodic reaction in this solution.[7] Calibration data from 2N KNO_3 were therefore used for the interpretation of dissolution experiments in 2 N KCl.

Results and Discussion

Oxygen analyses were conducted at 8-10 current densities within the ranges given in Table I for each combination of electrolyte composition and flow rate. Under these conditions, corresponding to a current range of 0.24 to 3.0 A, the anodic copper dissolution proceeds in the transpassive mode.[1,4,8] In order to detect 1% current efficiency for oxygen evolution during anodic metal dissolution at the lowest current and highest flow rate employed, the sensor must be capable of detecting oxygen evolved at the platinum anode (with an assumed 100% current efficiency) when 2.4 mA is passed. The calibrations show (Fig. 3) that the resulting oxygen concentrations at both flow rates (100 and 500 cm/sec) can be detected.

Under all conditions of anodic copper dissolution investigated in this study, the increase in oxygen concentration detected by the sensor was less than what would correspond to 1% of the applied current. These results are in qualitative agreement with the extremely small levels of anodic gas evolution observed optically in free convection experiments,[8] and with the total absence of bubbles observed under flow conditions. From a thermodynamic point of view[9] Cu_2O and CuO would be expected to form before oxygen evolution potentials are reached (Table II). Experimental observations in alkaline solution[10,11,12] have confirmed that Cu is first oxidized to Cu_2O; subsequently CuO is formed, and at high enough potentials, oxygen is evolved. The fact that little or no oxygen is evolved in anodic copper dissolution under forced electrolyte convection suggests that the electrode potentials don't reach sufficiently high values during the continuous removal of solid reaction products, composed mainly of cuprous

oxide.[4,8] Thus, a situation comparable to that reported by Hickling and Taylor,[10] where oxygen evolution occurred only after a cupric oxide layer had formed (which was thick enough to protect the metal surface from further attack) does not arise under the experimental conclusions stated above.

The absence of oxygen evolution during the high-rate anodic dissolution of copper supports the hypothesis that observed non-integral valences result from the simultaneous dissolution in the +1 and +2 valence states.

Acknowledgment

This work was conducted under the auspices of the U. S. Atomic Energy Commission.

Table I. Electrolysis Conditions for Oxygen Analysis.

Electrolyte	Flow Rate (cm/sec)	Flow Rate (cc/sec)	Current Density Range (amp/cm^2)
2N KNO_3	100	1.5	2.5-37
	500	7.5	10.5-80
1N K_2SO_4	100	1.5	5.3-37
	500	7.5	5.3-50
2N KCl	100	1.5	5.3-40
	500	7.5	10.5-63

Table II. Equilibrium Potentials[9] of Possible Anode Reactions

	E_o (volts)
$2\ Cu + H_2O \longrightarrow Cu_2O + 2H^+ + 2e$	0.471
$Cu + H_2O \longrightarrow CuO + 2H^+ + 2e$	0.570
$2\ H_2O \longrightarrow O_2 + 4H^+ + 4e$	1.228

REFERENCES

1. K. Kinoshita, D. Landolt, R. H. Muller and C. W. Tobias, J. Electrochem. Soc., 117, 1246 (1970).
2. A. Rius and A. S. Terol, Proc. 2nd Meet. Intl. Comm. Electrochem. Thermodynamics and Kinetics (CITCE)(1950), p. 202, Tamburini, Milano, 1951.
3. P. E. Lake and E. J. Casey, J. Electrochem. Soc. 105, 52 (1958).
4. D. Landolt, R. H. Muller and C. W. Tobias, J. Electrochem. Soc. 116, 1384 (1969).
5. D. Landolt, R. Acosta, R. H. Muller and C. W. Tobias, J. Electrochem. Soc. 117, 839 (1970).
6. G. Milazzo, Electrochemistry, Theoretical Principles and Practical Applications, Elsevier Publishing Co., Amsterdam, (1963), p. 257.
7. E. C. Potter, Electrochemistry Principles and Applications, Cleaver-Hume Press Ltd., London (1961), p. 340.
8. K. Kinoshita, Ph. D. Thesis, University of California, Berkeley, UCRL-19051, Sept. 1969.
9. M. Pourbaix, Atlas of Electrochemical Equilibria in Aqueous Solutions, Pergamon Press, (1966).
10. A. Hickling and D. Taylor, Trans. Faraday Soc. 44, 262 (1948).
11. S. E. S. El Wakkad and S. H. Emara, J. Chem. Soc. 3504 (1953).
12. J. S. Halliday, Trans. Faraday Soc. 50, 171 (1954).

FIGURE CAPTIONS

Fig. 1. Electrolyte flow system for oxygen gas analysis.

A, anode; B, epoxy oxygen analysis cell; C, epoxy electrolysis cell; D, magnetic stirring motor; E, cathode; F, coiled collection tube, 3/16" stainless; G, 3-way solenoid valve; H, mechanical variable speed drive electric motor; I, teflon piston; J, storage flask; K, gas sparger inlet tube; L, polyvinyl chloride pump cylinder.

Fig. 2. Cross-section of oxygen analysis cell.

A, oxygen sensor; B, epoxy cell; C, polypropylene plunger; D, measuring chamber; E, needle valve; F, mounting bracket; G, plunger holder; H, O-ring seals; I, solution flow channel; J, epoxy coated magnetic stirring bar; K, stainless steel tubings to electrolysis cell and collection coil; L, flange.

Fig. 3. Calibration of oxygen sensor and sampling technique with platinum anode in 2N KNO_3 at 500 cm/sec flow rate. Calculated O_2 concentration at 30 mA: 0.3 ppm.

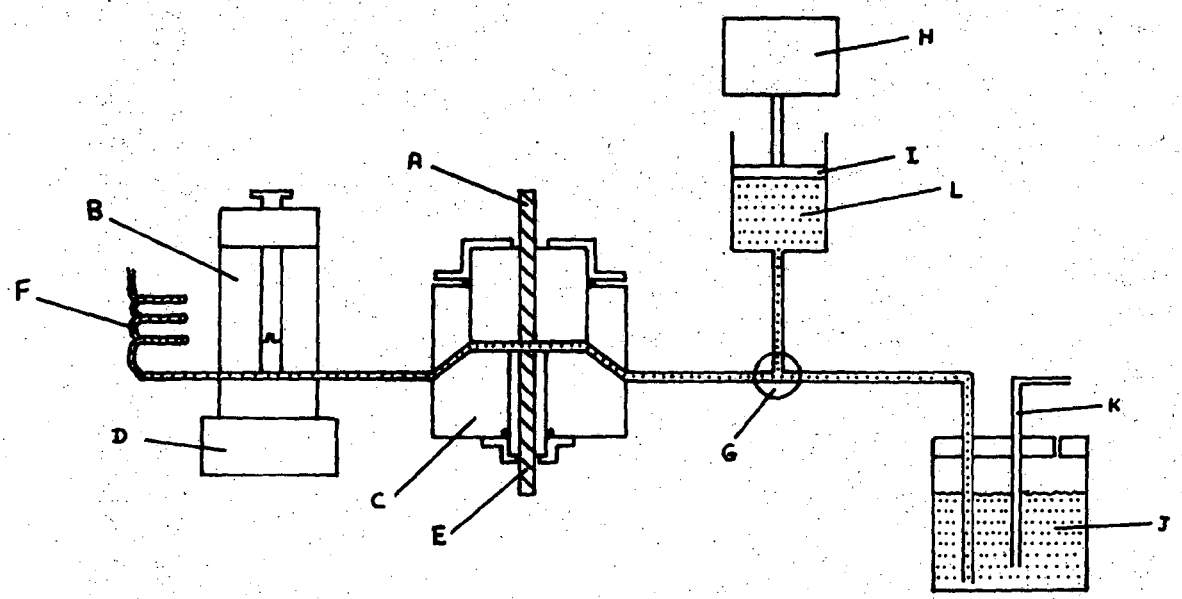

XBL 696-767

Fig. 1.

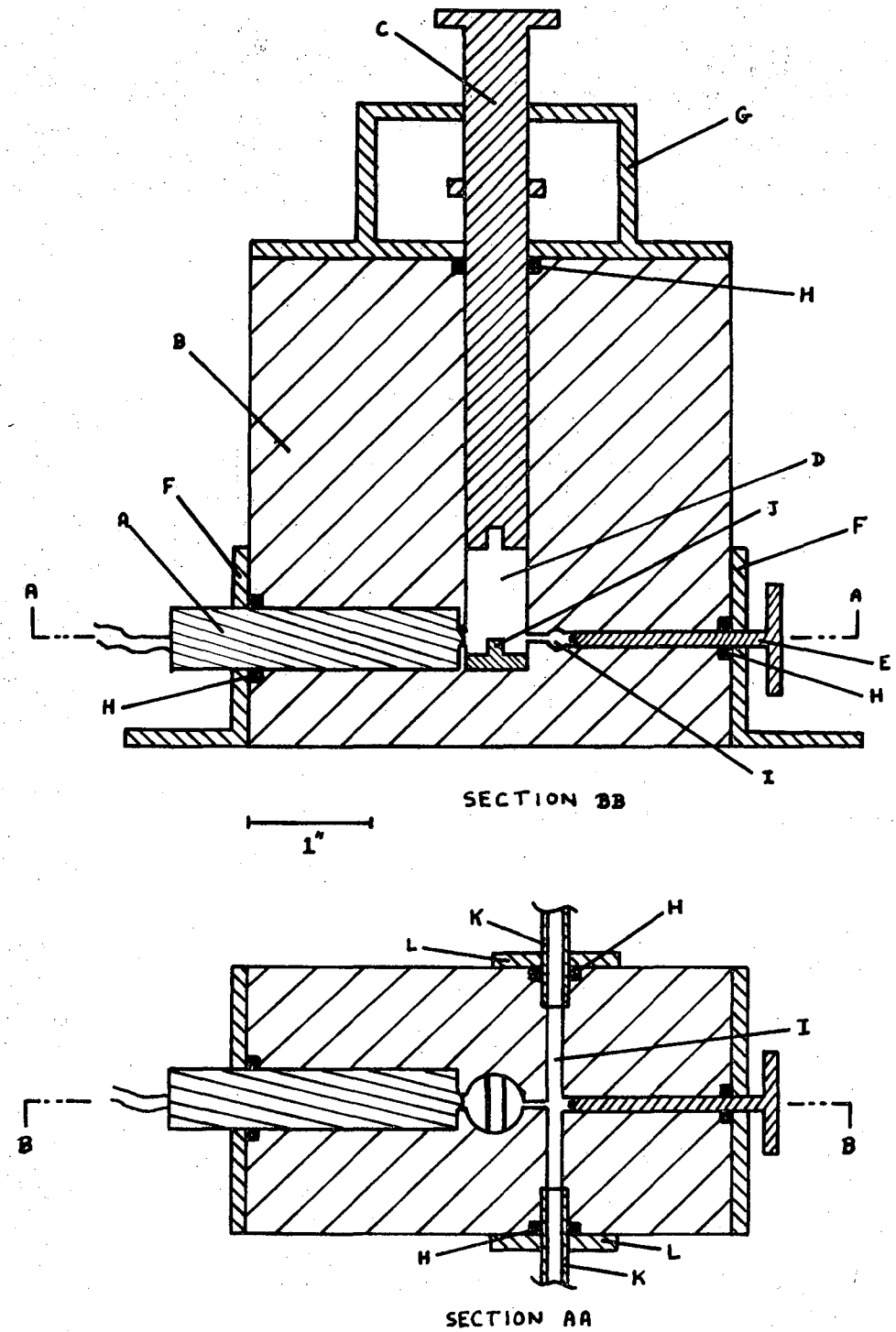

XBL 696-768

Fig. 2.

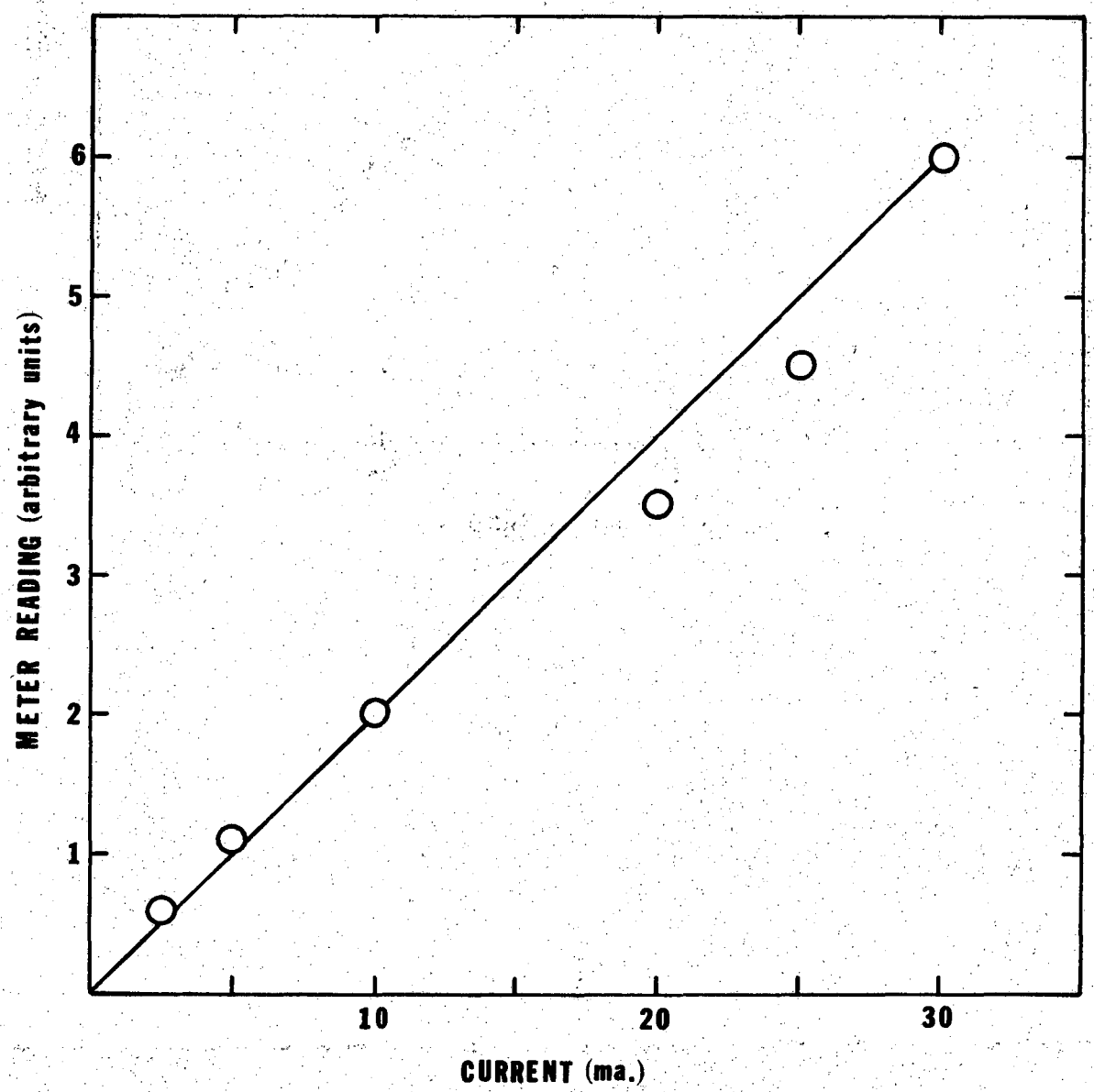

XBL 697-852

Fig. 3.

LEGAL NOTICE

This report was prepared as an account of Government sponsored work. Neither the United States, nor the Commission, nor any person acting on behalf of the Commission:

A. Makes any warranty or representation, expressed or implied, with respect to the accuracy, completeness, or usefulness of the information contained in this report, or that the use of any information, apparatus, method, or process disclosed in this report may not infringe privately owned rights; or

B. Assumes any liabilities with respect to the use of, or for damages resulting from the use of any information, apparatus, method, or process disclosed in this report.

As used in the above, "person acting on behalf of the Commission" includes any employee or contractor of the Commission, or employee of such contractor, to the extent that such employee or contractor of the Commission, or employee of such contractor prepares, disseminates, or provides access to, any information pursuant to his employment or contract with the Commission, or his employment with such contractor.

TECHNICAL INFORMATION DIVISION
LAWRENCE RADIATION LABORATORY
UNIVERSITY OF CALIFORNIA
BERKELEY, CALIFORNIA 94720