DISCLAIMER

This document was prepared as an account of work sponsored by the United States Government. While this document is believed to contain correct information, neither the United States Government nor any agency thereof, nor the Regents of the University of California, nor any of their employees, makes any warranty, express or implied, or assumes any legal responsibility for the accuracy, completeness, or usefulness of any information, apparatus, product, or process disclosed, or represents that its use would not infringe privately owned rights. Reference herein to any specific commercial product, process, or service by its trade name, trademark, manufacturer, or otherwise, does not necessarily constitute or imply its endorsement, recommendation, or favoring by the United States Government or any agency thereof, or the Regents of the University of California. The views and opinions of authors expressed herein do not necessarily state or reflect those of the United States Government or any agency thereof or the Regents of the University of California.

UNIVERSITY OF CALIFORNIA
Radiation Laboratory
Berkeley, California

UCRL 2034

Course in the Theory and
Design of Particle Accelerators

LECTURE III
November 19, 1952

W. M. Brobeck
(Notes by: L. Brown, R. Burleigh, R. Byrns)

- - - - - - - - - - - - - - - - - -

CIRCULAR MACHINES

CYCLOTRON

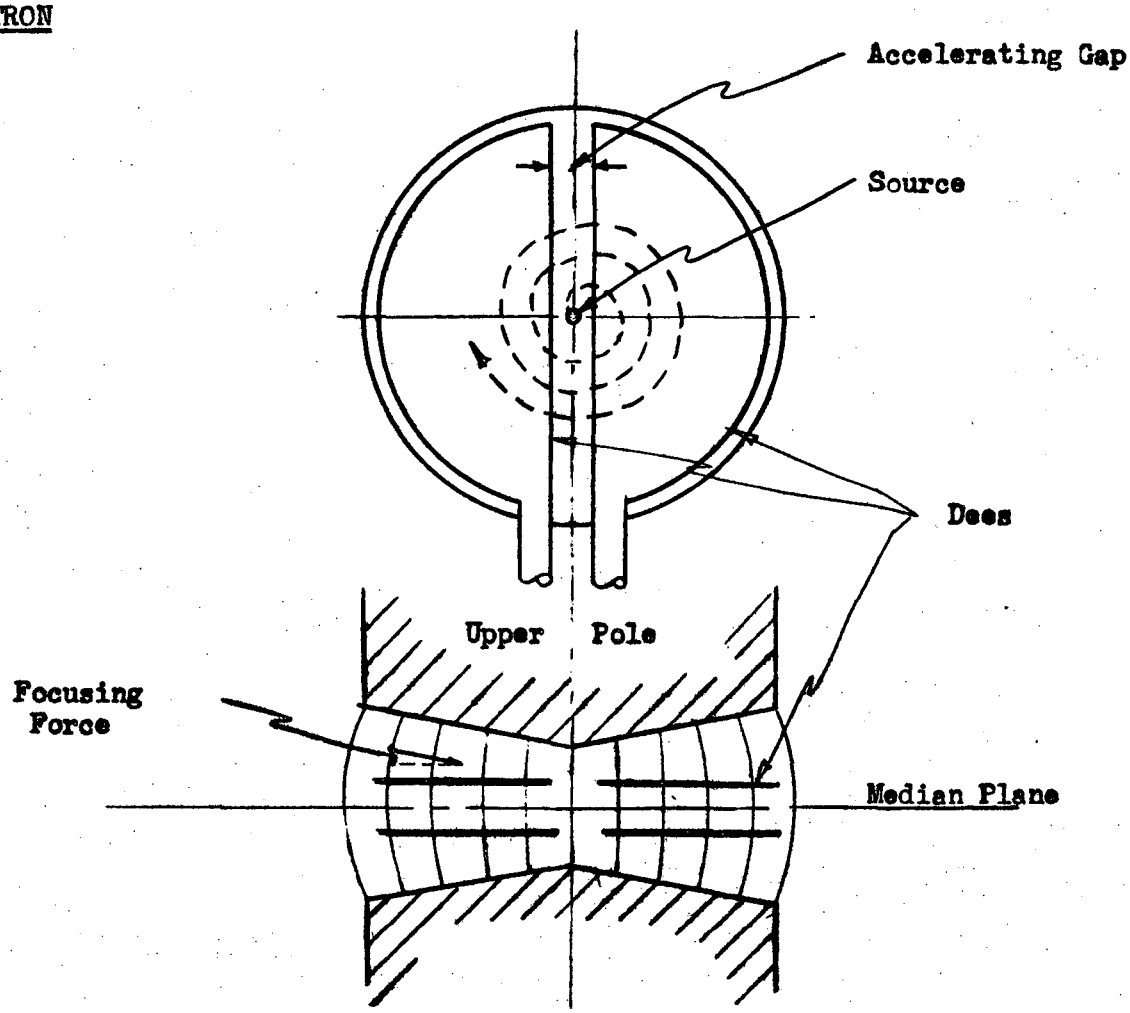

The fact on which the cyclotron operation is based is that the time required for revolution of a particle in a magnetic field is independent of the energy of the particle. The frequency of the voltage which must be applied to cause the machine to stay in step with the particle is called the Larmour frequency. This frequency is low compared to the frequency required for operation of a linear accelerator. The development of the linear accelerator was delayed due to the lack

of a good high-frequency power supply.

Professor Lawrence developed the first cyclotron by applying the Larmour frequency to the two dees (electrodes) of a cyclotron.

The ions start on their path through the machine by being pulled out of the source by the voltage applied on one of the dees. The particles go through the machine by being pulled across the gap, each trip across the gap giving the particle additional energy and causing the particle to move at a larger radius.

In order to keep the particles focused at the median plane the poles are made slightly conical. This has the effect of reducing the field with increasing radius and produces a bowed shape to the field. As the force on a charged particle moving in a magnetic field is at right angles to the flux lines it will be seen that a particle which moves away from the median plane will experience a component of force pushing it back to the median plane. (See diagram Page 1).

The shape of the field is governed by the following considerations:

1. The field must decrease with increase in radius to provide an axial restoring force as explained above.

2. The field must not decrease faster than 1/radius to prevent ions spiraling outward.

3. The field must be such that the frequency of axial oscillations is not a small integral number times the frequency of the radial oscillations (or vice versa) to prevent the transfer of energy from the one mode to the other resulting in such large amplitudes that the particle is lost.

In a conventional or non-frequency modulated cyclotron, the dee voltage is roughly proportional to the output energy squared. This obviously means high dee voltages; for instance, to accelerate deuterons to 100 MEV in the 184" cyclotron without frequency modulation (as originally planned) would require a dee voltage of one million volts.

The 60" cylcotron produces 20 MEV deuterons with about 100 kilovolts dee to ground voltage. With 2 dees and hence twice this voltage across the gap and with two accelerations per turn, the minimum number of turns required is theoretically:

$$\frac{20{,}000{,}000 \text{ Volts}}{4 \times 100{,}000 \text{ Volts/turn}} = 50 \text{ Turns}$$

Actually about 200 turns are required.

The time required for acceleration at 12 megacycles voltage frequency is:

$$\frac{200 \text{ cycles (or turns)}}{12{,}000{,}000 \text{ cycles/sec.}} = 16 \text{ micro seconds}$$

THE SYNCHROCYCLOTRON (OR FREQUENCY MODULATED CYCLOTRON)

The energy to which a particle may be accelerated in the conventional or CW cyclotron is limited by the high dee voltage required to accelerate the particle

to relativistic energies. As the mass of the particle increases the particle becomes retarded in phase (a heavier particle takes longer to make a complete turn) until it is out of step with the accelerating voltage and the particle is lost. The conventional cyclotron in order to excite a particle to high energies must do this in as few turns as possible so that the particle may be accelerated before getting too far out of step. The alternative of increasing the magnetic field as the mass (and correspondingly, radius) increases, is ruled out by the necessity of focusing.

The synchrocyclotron overcomes this difficulty by modulating the RF frequency on the dee so that the accelerating voltage and the particle keep in step, (i.e., the RF frequency is decreased as the particle spirals outward with decreasing angular frequency).

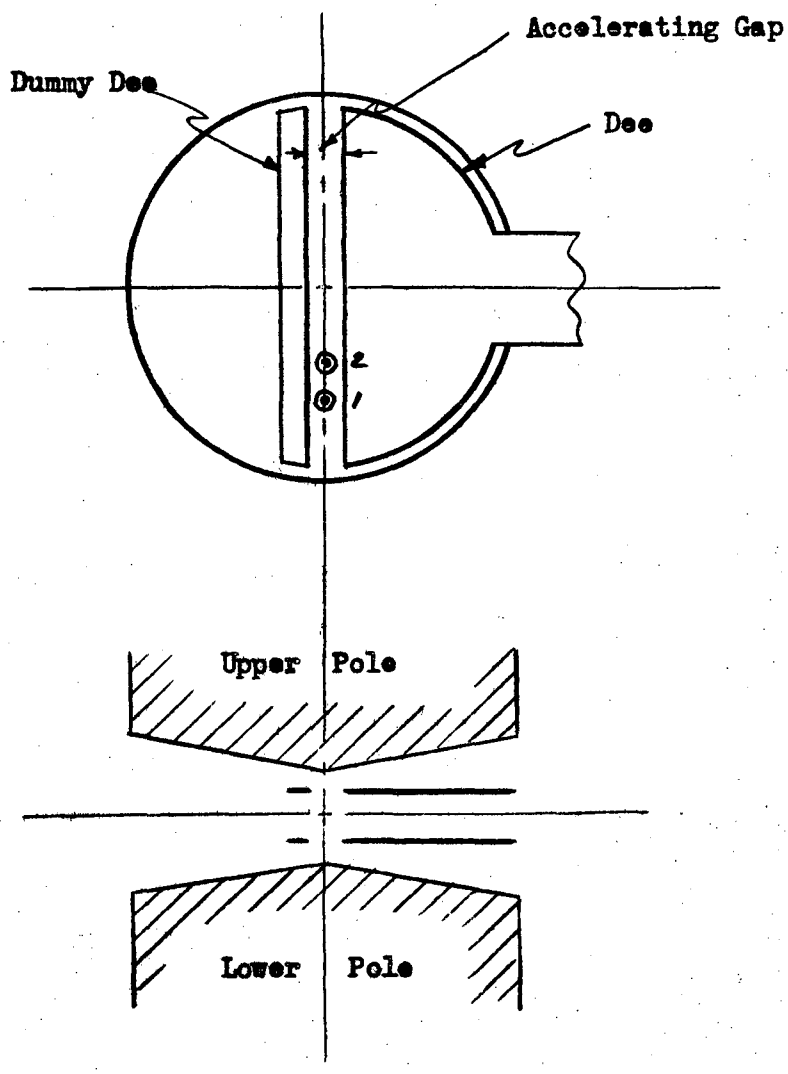

In the conventional cyclotron two dees are advantageous as for a given voltage across the gap only half that voltage appears from dee to ground, thus reducing the sparking problem. In the synchrocyclotron, however, high energies may be obtained with moderate accelerating voltages and therefore, only one dee is usually used.

The principle of phase stability (developed independently by McMillan and Veksler) applies to the synchrocyclotron in a similar, but not identical, manner to that which has been previously described for the linear accelerator.

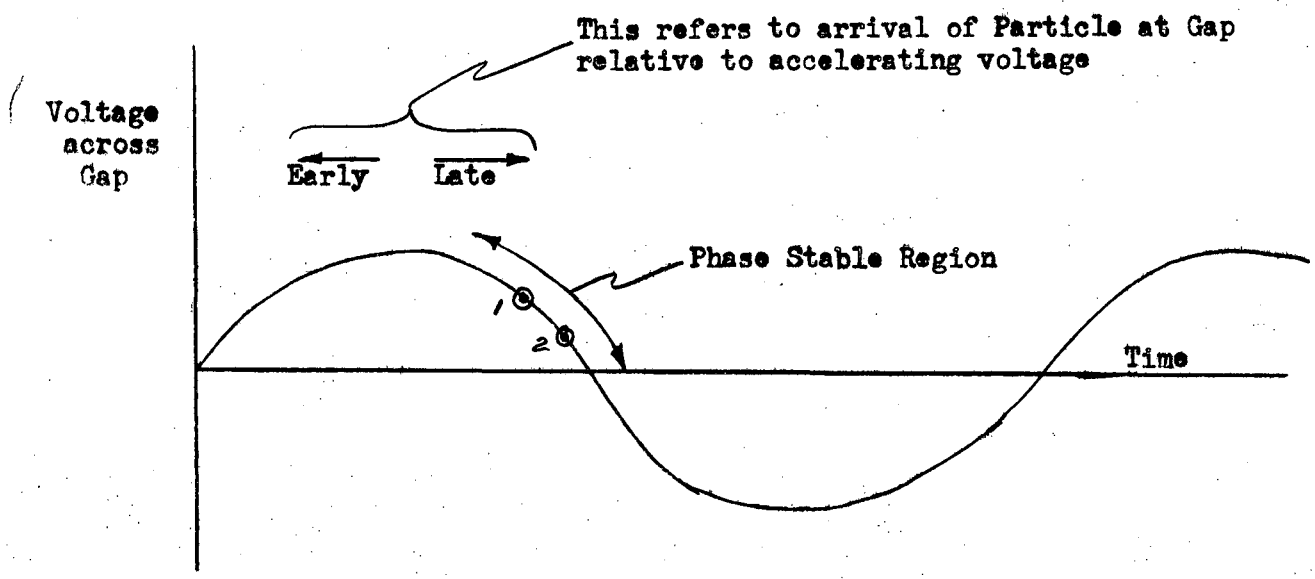

Consider two particles 1 and 2 indicated on the graph of voltage vs. time and shown in the plan view of the pole. Particle 2 arriving at the accelerating gap later than particle 1 sees a smaller voltage and therefore, experiences a smaller acceleration. Particle 2 then has a lower velocity than 1 and therefore, describes an orbit of smaller radius than 1. Due to the fact that the field is decreasing with radius, particle 2 will be in a stronger magnetic field and will therefore arrive earlier on the next cycle and will then pick-up more energy. Conversely, a particle arriving too early will pick up more energy, will then circulate in a region of lower magnetic field, and therefore, arrive later on the following cycle.

The situation described above applies to changes in velocity of the particle. In a similar manner it may be shown that this also applies if the particle is considered to have essentially constant velocity and increasing mass (i.e., a particle arriving late experiences a smaller increase in mass than one arriving earlier, will then circulate in a region of higher magnetic field, and will therefore, arrive earlier on the next cycle). This principle, then, applies to both relativistic and non-relativistic energies. Particles that are not caught in the phase stable region are lost.

Comparing phase stability in the linear accelerator with that in the synchrocyclotron, it will be seen that the phase stable region for the linear accelerator is on the rising portion of the voltage-time curve, while the phase stable region in the synchrocyclotron is on the falling portion:

linac - late - unstable
synchro - late - stable

It should also be pointed out that phase stability in the synchrocyclotron is dependent upon the magnetic field decreasing with radius while in the linear accelerator magnetic field considerations are of no concern in relation to phase stability.

SYNCHROTRON

The synchrotron operates on the principle of phase stability and accelerates particles in the relativistic regions. There are two general classes of synchrotrons: electron accelerators and proton accelerators.

In the electron synchrotron the particle velocity is so high, approaching the speed of light, that it may be considered almost constant, hence the frequency of the accelerating RF voltage is constant. The radius of the particle path is practically constant and the magnet is pulsed. As energy is gained and effective particle mass increases, the rising quarter cycle of increasing magnetic field is used to hold the particle in its orbit.

The Synchrotron (Building 25) at Berkeley has a peak energy of about 320 MEV electrons.

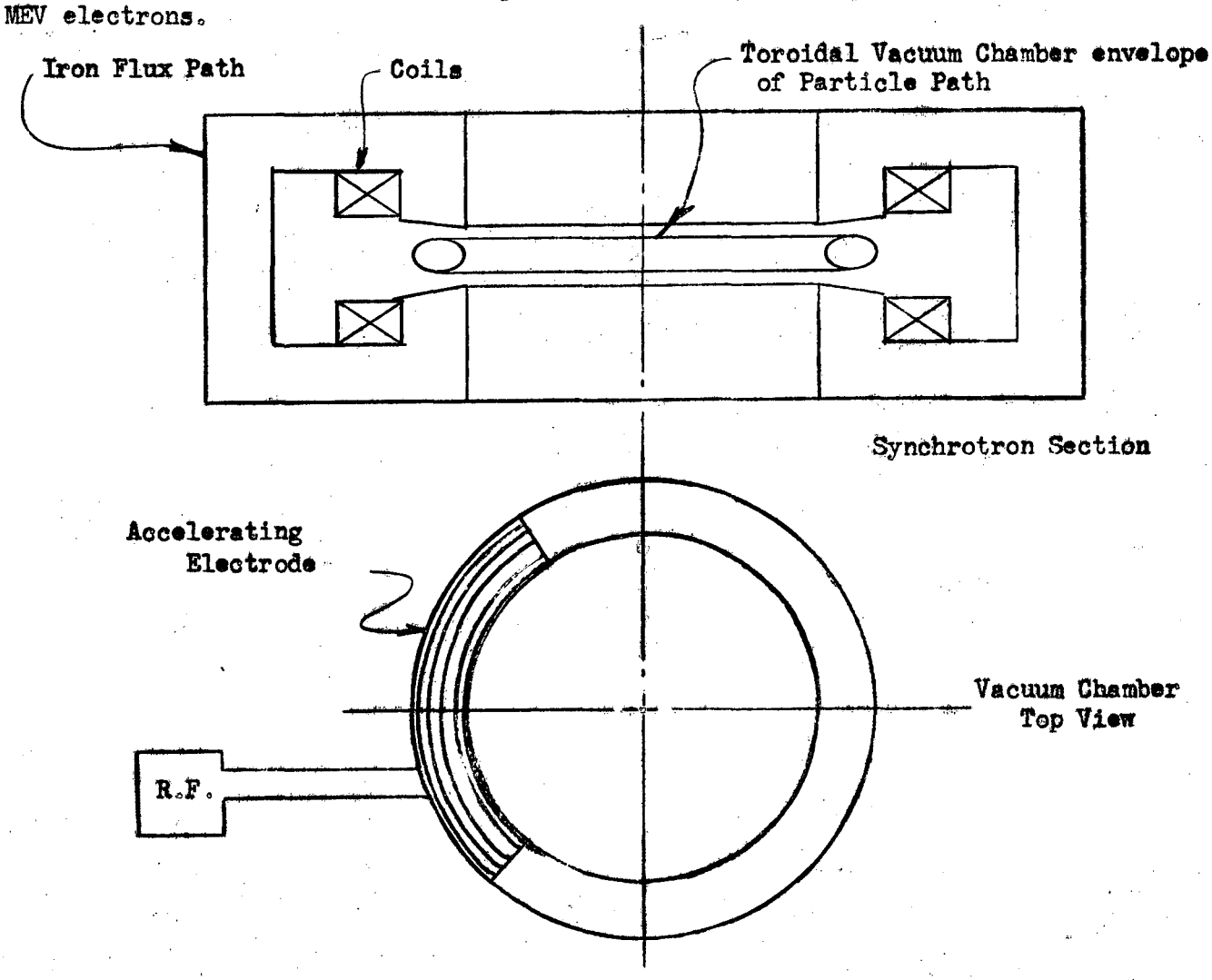

The accelerating electrode in the synchrotron behaves electrically as does a cyclotron dee. A sector of the quartz vacuum chamber is copper plated to form the electrode; the plating is divided into annular strips to reduce eddy current losses.

PROTON SYNCHROTRON, i.e., BEVATRON, BUILDING 51

As the proton synchrotron accelerates heavier particles, they posses a lower velocity for most of the accelerating period. Therefore, a variable frequency accelerating voltage must be used; the magnetic field of the proton synchrotron is similar to that of the electron synchrotron.

Four gaps in the magnetic field are provided. The injector, the accelerating electrode and the target are each placed in one of the gaps. Particle stability is greater with four gaps than with two, as resonance with radial oscillations is reduced.

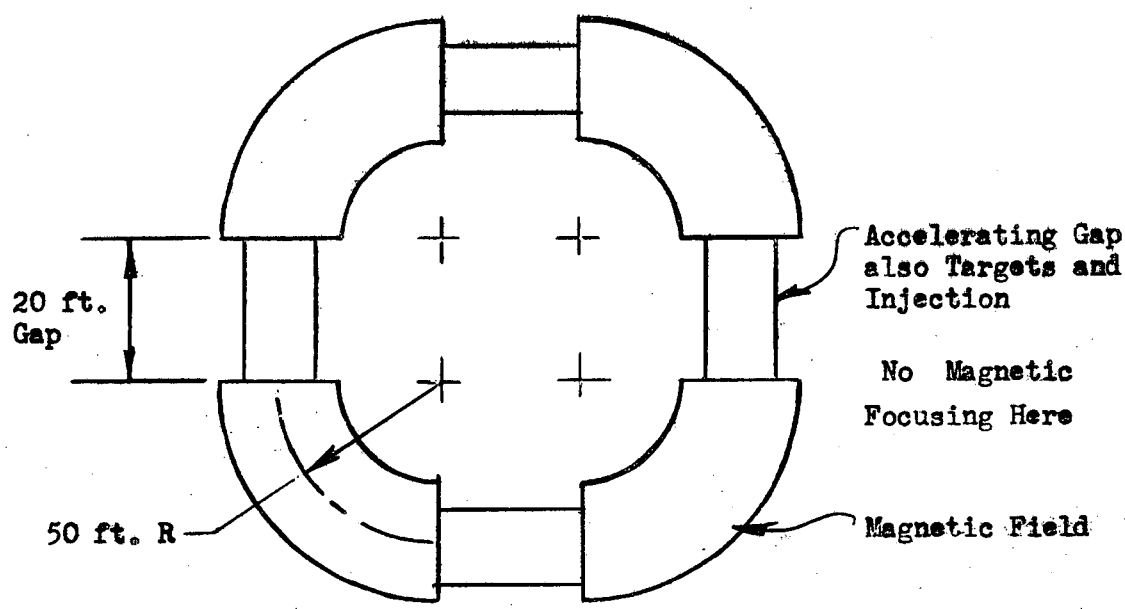

Plan View
Berkeley Proton Synchrotron

BETATRON

The synchrotron at Berkeley uses a betatron cycle to bring electrons from their injected energy up to a velocity where the cynchrotron cycle can take over. The betatron was developed before the synchrotron, and is used extensively for the commercial production of X-rays. About 100 betatron machines have been built by Allis-Chalmers and General Electric.

The betatron is a magnetic induction accelerator. Acceleration is accomplished by a changing flux threading the particle orbit. Rising magnetic flux produces the driving force. In effect the flux moves at right angles to the particle path producing a component along the path which accelerates the particle. During the whole cycle a continuous accelerating force acts, hence phase stability presents no problem.

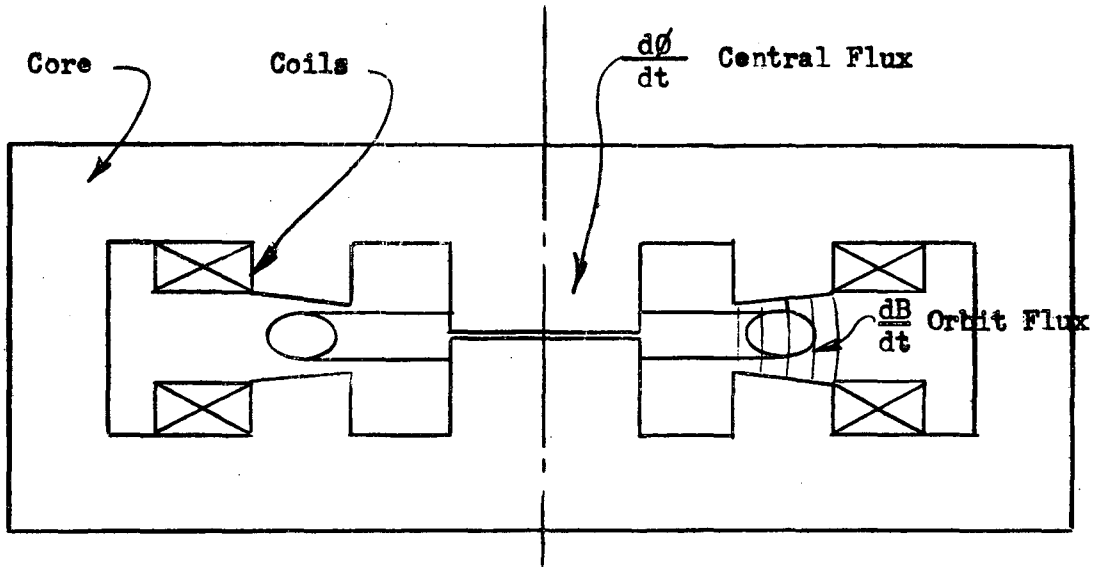

Betatron Cross Section

Magnet design for betatron action is very critical. The ratio of rate of change in field at the orbit, dB/dt, to the rate of change of flux through the core, dØ/dt, must be constant to produce acceleration; dØ/dt = dB/dt(K). This critical ratio may be achieved by adjusting the gap in the central magnet core.

Because of constant acceleration, (circular path, acceleration towards center) the electrons experience a radiation loss. To provide for this loss, the University of Illinois machine has a separate core for the central flux with separate exciting windings to give a higher value of K at high energies.

LEGAL NOTICE

This report was prepared as an account of Government sponsored work. Neither the United States, nor the Commission, nor any person acting on behalf of the Commission:

A. Makes any warranty or representation, expressed or implied, with respect to the accuracy, completeness, or usefulness of the information contained in this report, or that the use of any information, apparatus, method, or process disclosed in this report may not infringe privately owned rights; or

B. Assumes any liabilities with respect to the use of, or for damages resulting from the use of any information, apparatus, method or process disclosed in this report.

As used in the above, "person acting on behalf of the Commission" includes any employee or contractor of the commission, or employee of such contractor, to the extent that such employee or contractor of the Commission, or employee of such contractor prepares, disseminates, or provides access to, any information pursuant to his employment or contract with the Commission, or his employment with such contractor.