Submitted to Nuclear Instruments
and Methods

UCRL-20424
Preprint c.2

DOCUMENTS SECTION

A HIGH-RESOLUTION DETECTION SYSTEM FOR SHORT-LIVED GASEOUS ACTIVITIES

John E. Esterl, R. G. Sextro, J. C. Hardy,
G. J. Ehrhardt, and Joseph Cerny

June 1971

AEC Contract No. W-7405-eng-48

TWO-WEEK LOAN COPY

This is a Library Circulating Copy which may be borrowed for two weeks. For a personal retention copy, call Tech. Info. Division, Ext. 5545

UCRL-20424 c.2

LAWRENCE RADIATION LABORATORY
UNIVERSITY of CALIFORNIA BERKELEY

37

DISCLAIMER

This document was prepared as an account of work sponsored by the United States Government. While this document is believed to contain correct information, neither the United States Government nor any agency thereof, nor the Regents of the University of California, nor any of their employees, makes any warranty, express or implied, or assumes any legal responsibility for the accuracy, completeness, or usefulness of any information, apparatus, product, or process disclosed, or represents that its use would not infringe privately owned rights. Reference herein to any specific commercial product, process, or service by its trade name, trademark, manufacturer, or otherwise, does not necessarily constitute or imply its endorsement, recommendation, or favoring by the United States Government or any agency thereof, or the Regents of the University of California. The views and opinions of authors expressed herein do not necessarily state or reflect those of the United States Government or any agency thereof or the Regents of the University of California.

A HIGH-RESOLUTION DETECTION SYSTEM FOR SHORT-LIVED GASEOUS ACTIVITIES*

John E. Esterl†, R. G. Sextro, J. C. Hardy††, G. J. Ehrhardt‡, and Joseph Cerny

Department of Chemistry and
Lawrence Radiation Laboratory
University of California
Berkeley, California 94720

June 1971

ABSTRACT

A fast gas-sweeping system has been developed which enables activities to be transported up to 5 meters from the target position in 50-100 ms. It has been used along with a cooled semiconductor-counter telescope to obtain delayed-proton spectra in which the energy resolution was limited to 45 keV by kinematic effects. The remote counting location also permits use of a Ge(Li) detector without fear of radiation damage. Several different high-yield target configurations are described, including a sulfur target that is useful for prolonged high-intensity bombardments.

*Work performed under the auspices of the U. S. Atomic Energy Commission.

†Present address: USS HOLLAND (AS-32), FPO N.Y., N.Y. 09501.

††Present address: Chalk River Nuclear Laboratories, Chalk River, Ontario, Canada.

‡Present address: Chemistry Department, Washington University, St. Louis, Missouri.

1. Introduction

The usual method[1]) of observing light β-delayed proton emitters ($\tau_{1/2} \approx$ 10-200 ms) has been to detect the protons in a silicon detector which directly views the target in which the activity is produced. This method has several disadvantages: First, to obtain a reasonable counting rate it is necessary to use high beam currents and good geometry; this leads to radiation damage to the detectors--even in systems shielded from direct beam-- and a consequent loss of resolution. Second, the target must be relatively thick ($\approx$ 0.5 to 2.0 mg/cm^2) in order to stop the recoiling nuclei and maximize the yield. The resulting distribution of recoil atoms throughout much of the target contributes an energy spread to the proton groups. Finally, there is an enormous flux of β-particles from the target which creates pileup difficulties and obscures the low energy portion of the spectrum. All these effects combine to limit the energy resolution (full width at half maximum-FWHM) obtainable using standard techniques to about 100 keV. Although the helium-jet recoil technique[2]), in which recoil nuclei are thermalized in helium and transported via a thin capillary to a collector, has solved similar problems in some cases, it was not clearly applicable to some nuclei of interest to us: ^{9}C, ^{13}O, ^{17}Ne, and ^{33}Ar. These activities might not be expected to stick to the collector with high efficiency, either because of their chemical properties or their light mass.

In order to study these activities, or any other activity that could readily be put into gaseous form, a fast gas-sweeping system similar to that used[3]) in the characterization of the decay properties of ^{8}He was developed. A carrier gas was used to sweep the activity of interest from the target

transducer which allowed continuous monitoring of the time behavior of the gas flow. The end wall at the base of the counting volume was kept to a thickness of 0.8 mm to reduce attenuation of γ-rays. A 2-in × 2-in NaI(Tl) detector was used for p-γ coincidence work while singles γ-ray data were generally taken with a Ge(Li) detector.

2.2. COUNTING TECHNIQUE AND ELECTRONICS

Figure 3 is a simplified drawing of the electronics. The valve control unit started a time router which permitted storage of separate energy spectra for up to eight time intervals. For example, in the study of ^{33}Ar all eight channels were set at 100 ms. In addition, it started a multiscalar which allowed half-life measurements of a selected proton peak. Counting was begun well after the signal to close the valve to the counting chamber had been sent, allowing time for the valve to close. Signals from either the valve control unit or the time router were fed into inhibit inputs (not shown in Fig. 3) on each amplifier gate. This ensured that only data taken during desired counting periods were stored.

The counter telescope consisted of a phosphorous-diffused silicon ΔE counter whose thickness ranged from 14-to 50-μm and a 1.0-mm lithium-drifted E counter. They were cooled to -30°C and operated satisfactorily in an atmosphere whose pressure fluctuated from about 35 Torr (counting) to 0.5 Torr (evacuated). As is shown in Fig. 3, the signals from the two detectors were required to be in fast coincidence ($2\tau \approx 15$ nsec) before being fed into a Goulding-Landis particle identifier[6]). Figure 4 shows a particle identifier spectrum. The structure labelled "β" is believed to be due to multiply-scattered β-particles since its relative magnitude decreases with decreasing

ΔE-counter thickness. Low energy electronic cutoffs probably convert the expected exponential shape into something resembling a peak. Gates set around the identified-proton peak help to further reduce the background by eliminating these spurious counts.

A sample delayed-proton spectrum from ^{33}Ar is shown in Fig. 5. Note the extremely low background level even at the lowest proton energies. The pulser resolution (FWHM) in this case was 35 keV while the observed peak-widths of narrow states were 45 keV. This greater width for observed states is due principally to an energy spread in this sequential decay caused by the momentum transfer effects from the preceding beta-decay. Similarly a sample gamma spectrum is shown in Fig. 6.

The efficiency of the system was such that we were able to observe about one proton per μC of integrated beam current for several different target-activity combinations. This rate reflects the fact that typical peak cross-sections for production of delayed-proton activities are 50 to 150 μbarns[7]). Rough calculations indicate that on the order of 10% of the activity that is produced arrives in the counting chamber. The proton-detection efficiency of the 65-cc counting chamber illustrated in Fig. 2 was calculated[5]) to be $(1.26 \pm 0.13) \times 10^{-3}$. At a typical beam current of 3 μA a good identified-proton spectrum could be obtained in eight to sixteen hours of running while proton-gamma coincidence experiments took about two days.

The speed of the system is limited by the speed of the valves and the length of tubing used. A typical transit time from target to counting chamber is 100 ms. The valves are normally-closed, solenoid-operated valves with an orifice of 6.35 mm in diameter. Even when driven at twice their rated voltage they took 10 to 15 ms to open. In the study[4]) of $^{13}O(\tau_{1/2} = 8.95$ ms) it was necessary

to use a one-meter line in order to achieve a time of 40 ms from the nominal opening of valve 2' to full height of the pressure pulse in the chamber. The actual transit time may be somewhat shorter since it is not known exactly when the valves opened. Although such a short-line length permitted less shielding, leading to somewhat increased background, the final proton-spectrum[4]) was a considerable improvement over earlier work[8]).

3. Applications

In the course of studying nuclei besides ^{33}Ar, both solid and gaseous targets were used. In the case just described, use of a gas target was a distinct advantage since a solid sulfur target could not have withstood the 3 μA ^{3}He beam for any length of time. In another case a gas target was the only practical possibility. The $^{14}N(p,2n)^{13}O$ reaction was used to produce ^{13}O. The nitrogen target gas was introduced by simply replacing the CS_2 reservoir by a cylinder of nitrogen. In this experiment, oxygen was used as the sweeping gas and the intermediate traps were omitted.

However, a system that could only use gaseous targets would be severely limited. Two different kinds of solid targets were used in conjunction with a short rectangular target chamber. Six oxidized titanium foils stacked 0.5 mm apart served as a target for the $^{16}O(^{3}He,2n)^{17}Ne$ reaction; helium was used to sweep the activity to the counting chamber. The yield for this target was slightly lower than that obtained with oxygen gas as a target. Nevertheless the yield was sufficient to illustrate the utility of such foil targets. A technique for making targets of granular material was also developed. Boric acid enriched in ^{10}B was pressed (at 141 kg/cm^2) into 100-mesh tungsten screen. Five such screens were stacked to form a target for the $^{10}B(p,2n)^{9}C$ reaction[5,9]). In this case

oxygen was used as the sweeping gas. With these two techniques almost any solid material that is resistant to beam-induced decomposition can be used as a target with the additional advantage that several targets can be stacked together and used simultaneously.

As was shown in the above examples, suitable targets can be made from many solid or gaseous materials. This, along with the capability for γ-ray measurements, gives the system considerable flexibility. Details of singles γ-ray studies using a Ge(Li) detector and p-γ coincidence studies using a NaI(Tl) detector are given in Ref. 5. Thus, this system should prove useful not only in investigations of light nuclei but also in studies of all rare gas nuclei with half-lives ranging from minutes to milliseconds.

Acknowledgments

We would like to thank Donald A. Landis for developing much of the electronic equipment used in this work.

References

1) A. M. Poskanzer, R. McPherson, R. A. Esterlund, and P. L. Reeder, Phys. Rev. 152 (1966) 995; J. C. Hardy and R. I. Verrall, Can. J. of Phys. 43 (1965) 418; see also J. Cerny, Ann. Rev. Nucl. Sci. 18 (1968) 27.

2) R. D. Macfarlane, R. A. Gough, N. S. Oakey, and D. F. Torgerson, Nucl. Instr. and Meth. 73 (1969) 285 and references therein.

3) A. M. Poskanzer, R. A. Esterlund, and R. McPherson, Phys. Rev. Letters 15 (1965) 1030.

4) J. E. Esterl, J. C. Hardy, R. G. Sextro, and J. Cerny, Phys. Letters 33B (1970) 287.

5) J. C. Hardy, J. E. Esterl, R. G. Sextro, and J. Cerny, Phys. Rev. C 3 (1971) 700.

6) F. S. Goulding, D. A. Landis, J. Cerny, and R. H. Pehl, Nucl. Instr. and Meth. 31 (1964) 1.

7) J. E. Esterl, Ph.D. Thesis, University of California at Berkeley, UCRL-20480.

8) R. McPherson, R. A. Esterlund, A. M. Poskanzer, and P. L. Reeder, Phys. Rev. 140 (1965) B1513.

9) J. E. Esterl, D. Allred, J. C. Hardy, R. G. Sextro, and J. Cerny (to be published).

Figure Captions

Fig. 1. A schematic diagram of the apparatus used for the production of ^{33}Ar from the reaction $^{32}S(^{3}He,2n)^{33}Ar$. The sequence of valve operation is shown at the bottom: valve open times are indicated.

Fig. 2. A schematic drawing of the counting chamber used for both delayed-proton and γ-ray studies. The spacer used to confine the gas to the region viewed by the counter telescope is shown cross-hatched.

Fig. 3. A simplified electronic diagram of the system used for proton singles and proton-gamma coincidence studies. As a check for very low-energy protons or alpha particles, all particles that stopped in the ΔE counter were recorded separately.

Fig. 4. The particle-identification spectrum following ^{17}Ne decay obtained using a 36-μm ΔE counter. The structure labelled "β" is discussed in the text.

Fig. 5. Spectrum of delayed protons observed following 35-MeV ^{3}He bombardment of CS_2. The use of a 14-μm ΔE detector in the counter telescope permitted identification of protons having energies as low as 1.3 MeV. All numbered peaks except no. 11 are identified with the decay of 173 ms-^{33}Ar. The peaks labelled ^{17}Ne result from the $^{16}O(^{3}He,2n)^{17}Ne$ reaction on oxygen target impurities.

Fig. 6. A γ-ray spectrum taken with a Ge(Li) detector following ^{3}He bombardment of CS_2. The 511-keV γ-ray has folded over upon itself several times. In addition to further characterizing the decay scheme of ^{33}Ar, measurements like this led to an improved value for the half-life of ^{34}Ar. (See Ref. 5.)

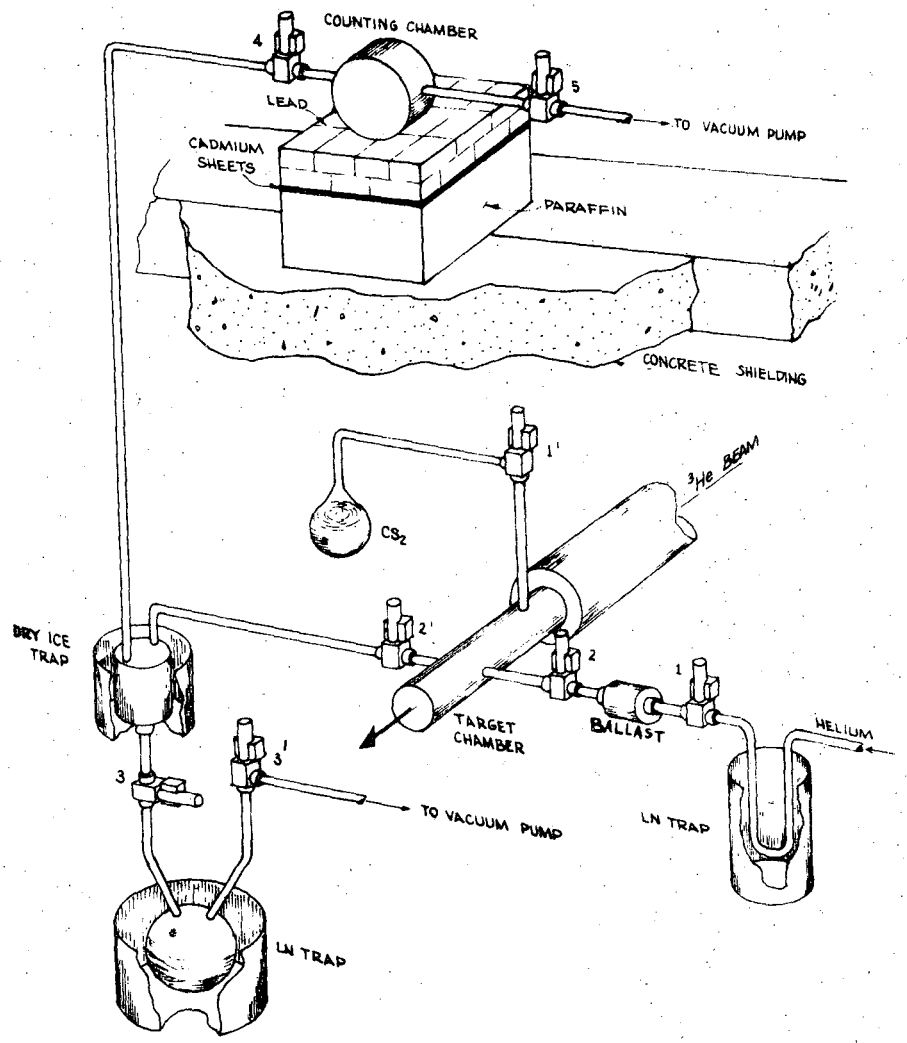

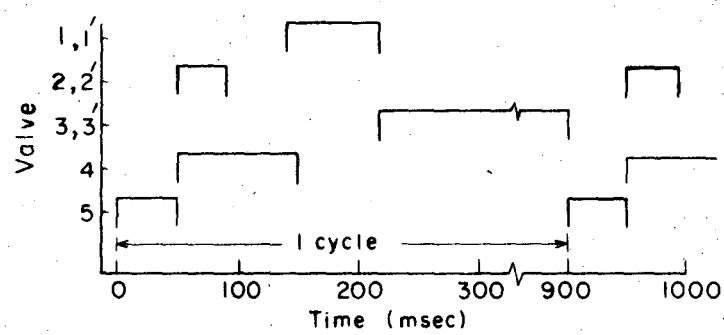

XBL708-3569

Fig. 1

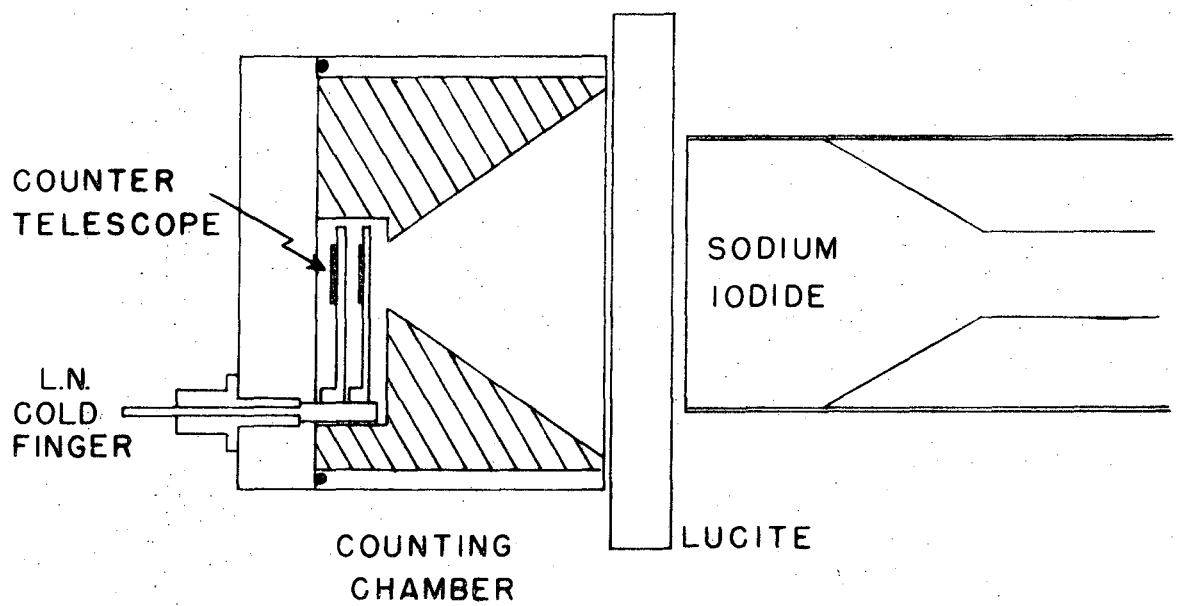

XBL 711-74

Fig. 2

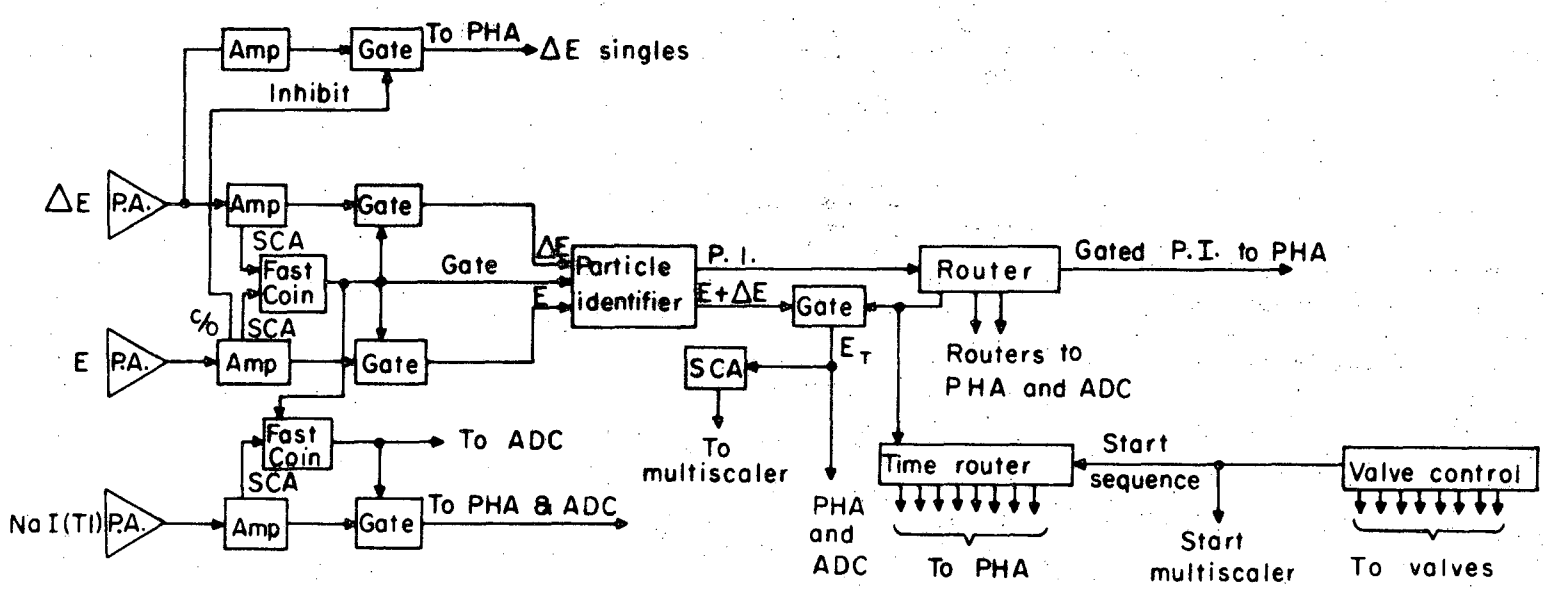

XBL711-2541

Fig. 3

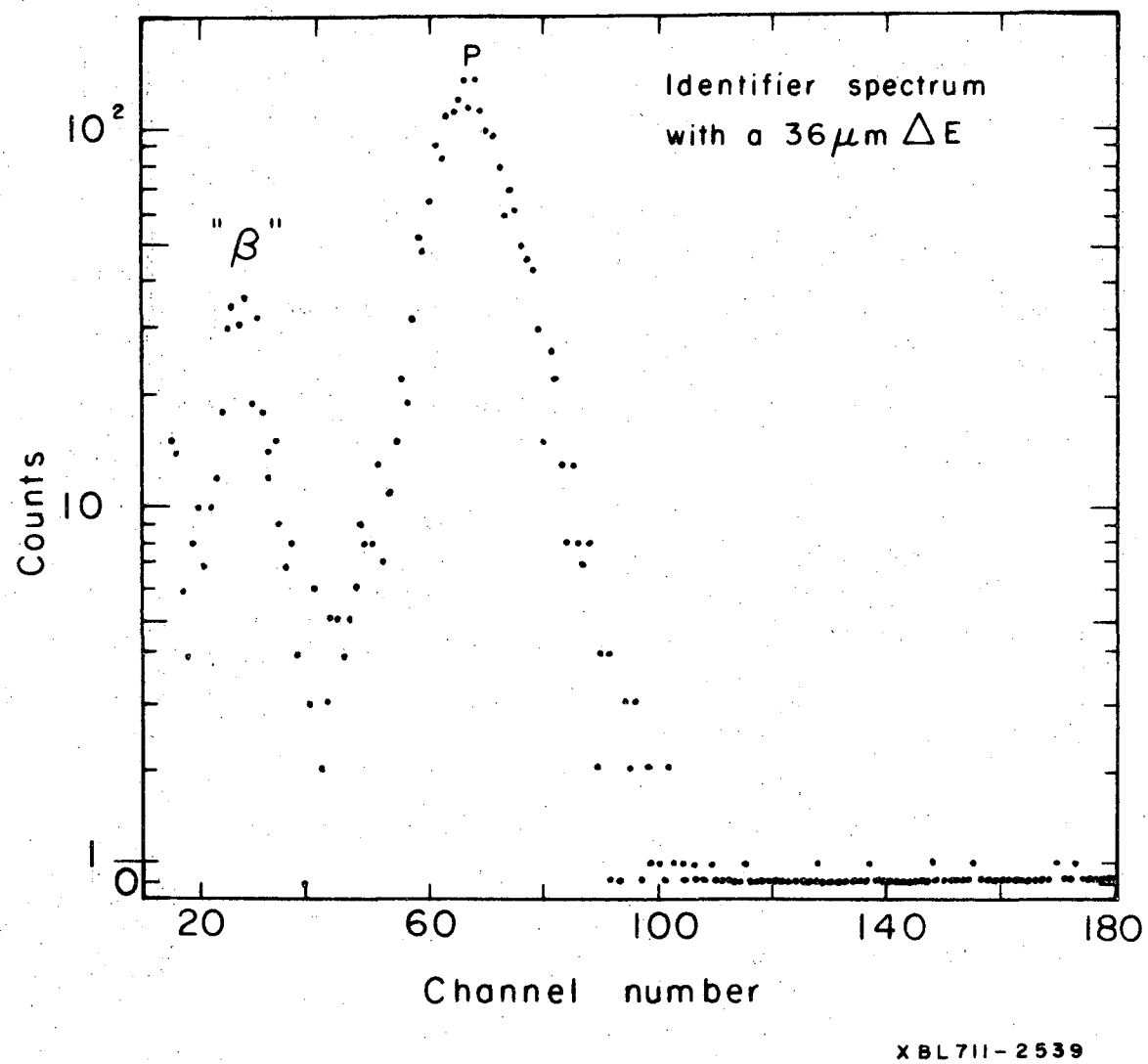
P
Identifier spectrum
with a 36μm ΔE
"β"
Counts
10²
10
1
0
20
60
100
140
180
Channel number
XBL711-2539

Fig. 4

LEGAL NOTICE

This report was prepared as an account of work sponsored by the United States Government. Neither the United States nor the United States Atomic Energy Commission, nor any of their employees, nor any of their contractors, subcontractors, or their employees, makes any warranty, express or implied, or assumes any legal liability or responsibility for the accuracy, completeness or usefulness of any information, apparatus, product or process disclosed, or represents that its use would not infringe privately owned rights.

TECHNICAL INFORMATION DIVISION
LAWRENCE RADIATION LABORATORY
UNIVERSITY OF CALIFORNIA
BERKELEY, CALIFORNIA 94720