Submitted to Nuclear Instruments
and Methods

UCRL-20434
Preprint

C.2

DIGITAL NUCLEAR SPECTROMETER

William W. Goldsworthy

January 1971

AEC Contract No. W-7405-eng-48

TWO-WEEK LOAN COPY

This is a Library Circulating Copy which may be borrowed for two weeks. For a personal retention copy, call Tech. Info. Division, Ext. 5545

LAWRENCE RADIATION LABORATORY
UNIVERSITY of CALIFORNIA BERKELEY

UCRL-20434 c.2

DISCLAIMER

This document was prepared as an account of work sponsored by the United States Government. While this document is believed to contain correct information, neither the United States Government nor any agency thereof, nor the Regents of the University of California, nor any of their employees, makes any warranty, express or implied, or assumes any legal responsibility for the accuracy, completeness, or usefulness of any information, apparatus, product, or process disclosed, or represents that its use would not infringe privately owned rights. Reference herein to any specific commercial product, process, or service by its trade name, trademark, manufacturer, or otherwise, does not necessarily constitute or imply its endorsement, recommendation, or favoring by the United States Government or any agency thereof, or the Regents of the University of California. The views and opinions of authors expressed herein do not necessarily state or reflect those of the United States Government or any agency thereof or the Regents of the University of California.

UCRL-20434

DIGITAL NUCLEAR SPECTROMETER

William W. Goldsworthy

Lawrence Radiation Laboratory
University of California
Berkeley, California 94720

January 1971

ABSTRACT

Charge developed at the output of a nuclear event detector, as a result of event occurrence and leakage, is digitally extracted from the detector's output to maintain balance and to serve as a means of conversion of event-liberated charge to a digital number. The quantity of charge extracted to maintain balance is metered and converted to a train of pulses, each of which represents the extraction of a discrete amount of charge. By processing these pulses, information can be derived relating to real-event energies, rate of occurrence of events, time relationships of event occurences, and background. Early numerical conversion of event-liberated charge, elimination of the need for processing of analog signals, the digital nature of the converted information (which lends itself to more efficient transmission and processing), and the greater spectrometer simplicity achieved are all advantages.

Introduction

The charge liberated by the interaction of radiation or charged particles in a nuclear detector is extracted ("run down") and converted directly to a digital number, eliminating the need for separate restoration of input charge and further processing of the analog signal.

By applying digital feedback to the output of a nuclear detector, so that charge balance can be maintained, charge liberated as a result of detecting nuclear events or from detector or input leakage, is extracted and digitized.

This early conversion of charge into a number eliminates the necessity of converting event-produced charge to a voltage pulse, amplifying this pulse through an amplifier system having high stability, good linearity, and rigid control of band-pass, and finally measuring the amplitude of the amplified pulse by means of an elaborate pulse-height analyzer.

In the digital scheme described, there is little dependence upon integrator or amplifier stability, linearity, or band pass, since the integrator and amplifier serve solely as a means of amplifying input charge unbalance, and the familiar functions of integration and differentiation are handled digitally by controlling rebalance time, by time averaging, and by numerical background subtraction.

Application of this digital approach to remotely located scientific data-sensing monitors such as would be used in space probes or unmanned pollution-monitoring stations, seems quite attractive

because of its simplicity, low weight, low power requirement, and compatibility with direct transmission of useful digital data.

Basic Digital Nuclear Spectrometer

As shown by the block diagram of the basic digital nuclear spectrometer (fig. 1), the output of the nuclear event detector is attached to the input of a current integrator and also to a charge extractor. Connected to the output of the integrator is a logic circuit, which continually maintains integrator input charge balance by controlling the amount of digital feedback applied to the integrator input by means of the charge extractor attached to it. A digital output, proportional to extracted charge, is also developed in this logic circuit and is sent along to a data processor for information extraction.

At the input of the spectrometer, current flows out of the detector as a result of event-liberated charge and detector leakage. Current also flows out across the gate-drain junction of the integrator's input field-effect transistor (FET), since it is reverse biased with respect to the detector. Current can also flow out through the charge extractor upon command from the logic circuitry. Normally current flow through the charge extractor is quite low, being only at a digital rate necessary for extraction of that part of the current (supplied by the detector), that does not flow out through the FET.

Upon occurrence of a nuclear event in the detector, there is an abrupt change in detector charge level. This charge shift results in an output potential unbalance of the integrator. The logic circuit attached

to the integrator senses this rapid change and allows digital extraction of input charge at the maximum rate of the local clock used to synchronize and originate rundown commands to the charge extractor. Information relating to the start and termination of real-event rundown, is contained in the spacing of the digital output signals, since during the time of rundown charge-extraction intervals have their minimum spacing, which is equal to 1/f of the clock frequency. During rundown a train of pulses proportional in number to the event-produced charge, plus leakage charge, is developed and sent to the data processor.

Data Processor

Information coming from the output of the basic digital nuclear spectrometer is contained in the number and spacing of its pulses. The data processor must examine this information and convert it to useful data. Many types of information may be stripped from the available digital input data. These are data on total radiation, energy of individual events, number of events, time relationships of events, and background.

The data processor used to demonstrate the feasibility of direct digital input conversion (shown in fig. 2) was designed only to determine individual nuclear-event energies. This processor consists of a programmer, an up-down accumulator, and a memory and display unit. Digital signals entering from the basic digital nuclear spectrometer are delayed before entering the up-down accumulator, to allow the start of the accumulator's programmer before arrival at the accumulator of digital information relating to a real event.

Undelayed digital signals simultaneously enter the accumulator programmer and are used to initiate the accumulation of real-event data. Upon the occurrence of a real event, the spacing between digital feedback intervals synchronizes to the clock frequency and causes initiation of an accumulator program of reset, sum, subtract, and readout. This program is shown in fig. 3 with integrator rundown. The "subtract" portion of the accumulator's program ensues only after rundown termination has been sensed by an increase in the time spacing of the digital feedback intervals. An equal time ensues following event rundown; then information relating only to background is numerically subtracted from the real-event-plus-background information already accumulated during the sum portion of the cycle. A digital up-down scaler driven at the clock frequency is used to automatically equalize sum and subtract times by allowing countup during summing and countdown to zero during subtraction. Upon completion of the sum and subtract portions of the cycle, a read interval occurs wherein information contained in the accumulator is transferred to a readout device or memory.

Charge Extraction

To handle the low charge levels developed from nuclear detectors a low-input-leakage active integrator followed by a gain-of-20 amplifier is used to amplify detector unbalance. To sense unbalance an integrated circuit differential comparator is employed. Its output is used to control the digital charge extractor, which maintains

input balance. Digital extraction of input event or leakage charge is by means of pulsed light-radiation stimulation of the input FET's gate-drain junction. This technique has been described earlier by Kandiah et al.[1] Light-radiation stimulation is also applied to the nuclear event detector to insure a detector leakage greater than that of the input FET, so that continuous input balance is possible. Light-radiation stimulation is accomplished through the use of light-emitting diodes (LED's) in which light radiation induces charge-pair production in the p-n junction regions of the detector or the input FET in much the same manner as charge-pair production occurs during event detection in a silicon detector. The LED employed for charge extraction is driven digitally at constant current by the rebalance logic circuitry, and the LED, employed for average balance, is driven from a direct current source.

Performance Tests

In the performance tests made, resolution suffered mainly as a result of long event-digitizing time. Resolution was limited by low-frequency vibration modulation of the detector-input assembly, which had a period close to the digitizing period used. A clock rate of 500 kHz was employed for synchronizing rundown.

Figure 4 displays the digitizing operation of the input integrator during actual rundown, and the lower trace shows the periods of summing and subtracting used during data processing. The horizontal scale is 200 μsec/cm.

For an actual performance test, a silicon x-ray detector was used to detect the γ-ray energies from a ^{57}Co source. The spectrum produced is shown in fig. 5. Although the ≈2-keV resolution performance obtained for the 122-keV γ-ray peak cannot be considered as excellent, it is certainly not bad for an initial try. Better future resolution should certainly result from more rapid digitization and greater charge extraction accuracy. The greatest future effort should be directed towards improving extractor measuring accuracy.

It should be apparent that the underlying principles of this new approach can be applied to any scientific study in which current or charge must be measured. The technique described was in fact developed originally for application to electrochemical studies, but because of its many advantages it should find application to other types of studies.

Reference

[1]) K. Kandiah and A. Sterling, A Direct-Coupled Pulse Amplifying and Analyzing System for Nuclear Particle Spectroscopy, Nuclear Particle Detectors and Circuits, Natl. Acad. Sci. Pub. 1593, p. 495, 1969.

Figure Captions

Fig. 1. Basic digital nuclear spectrometer.

Fig. 2. Data accumulator.

Fig. 3. Accumulator program.

Fig. 4. Integrator rundown.

Fig. 5. Gamma spectrum of ^{57}Co.

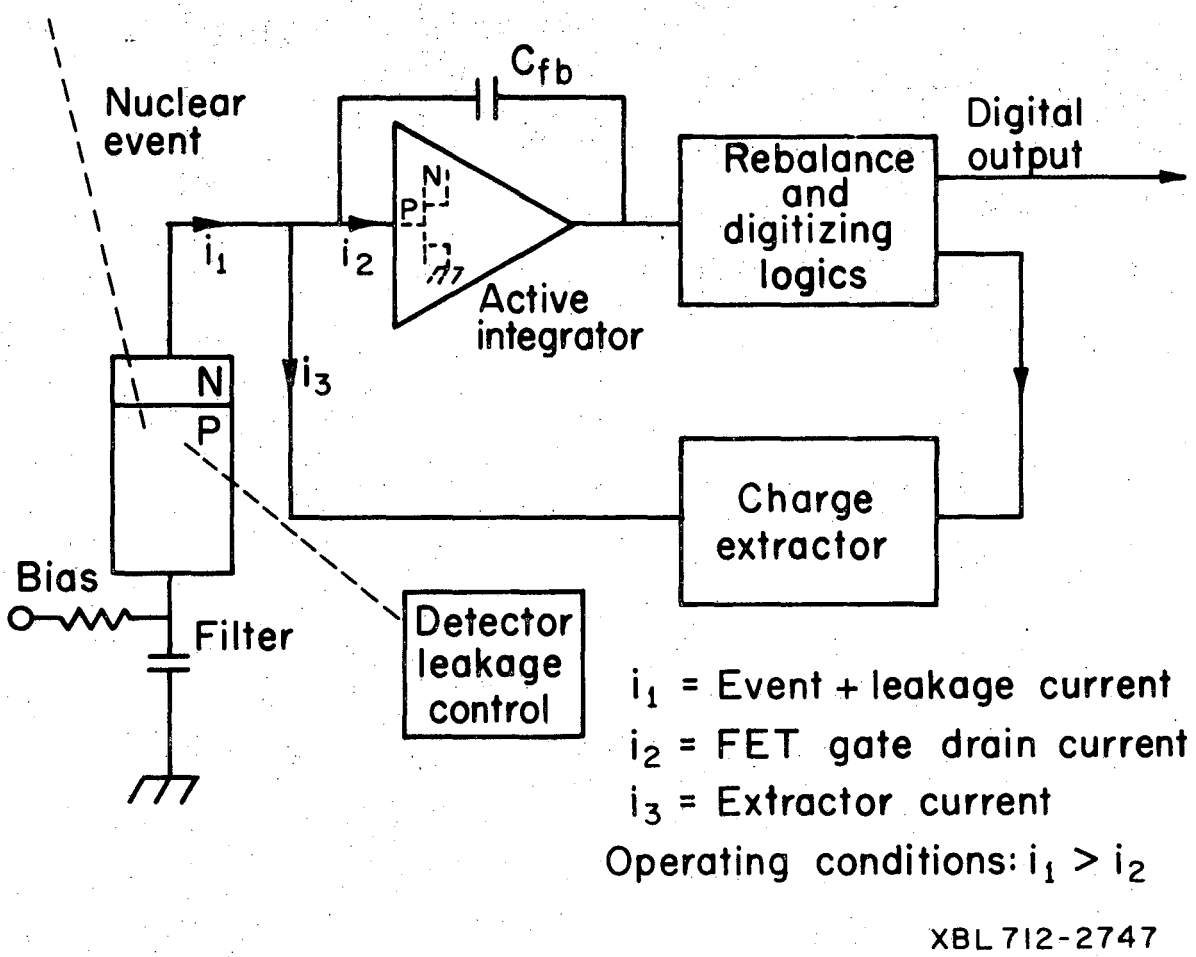
Nuclear event
C_{fb}
Digital output
Rebalance and digitizing logics
N
P
i_1
i_2
Active integrator
i_3
N
P
Charge extractor
Bias
Filter
Detector leakage control
i_1 = Event + leakage current
i_2 = FET gate drain current
i_3 = Extractor current
Operating conditions: $i_1 > i_2$
XBL 712-2747

Fig. 1

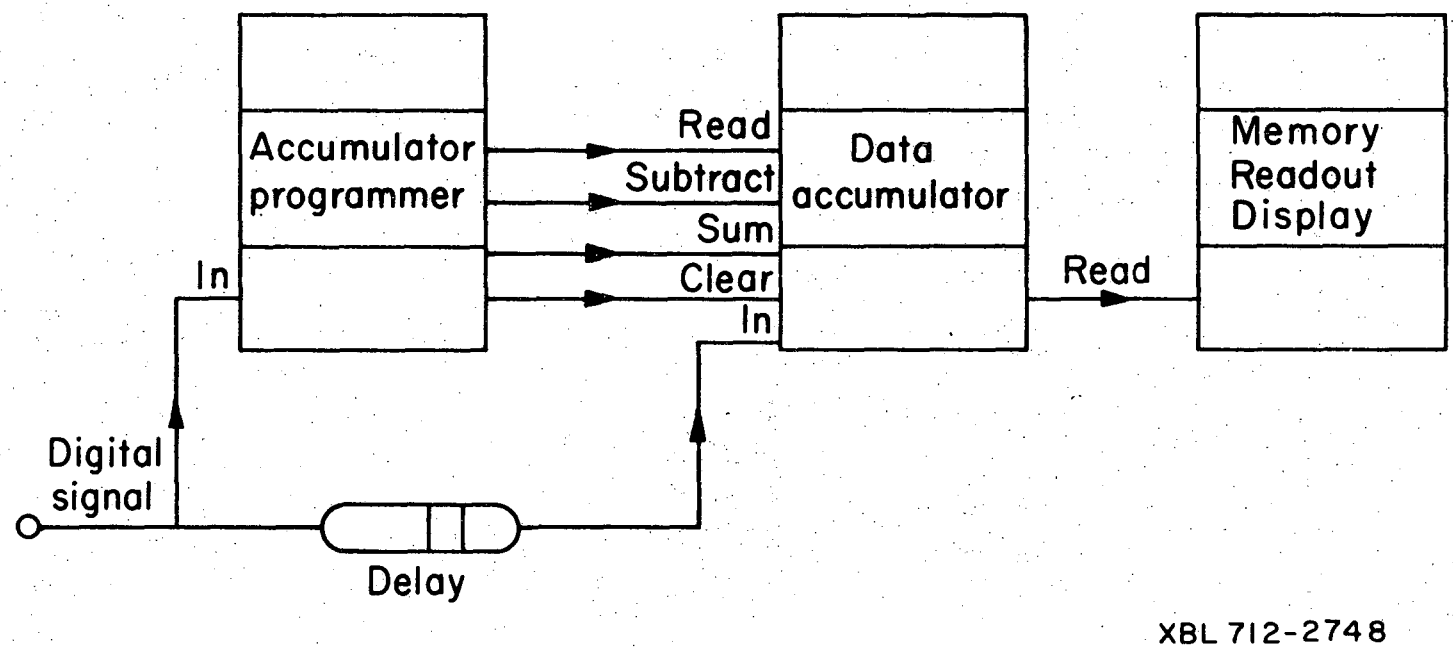
Accumulator programmer
In
Read
Subtract
Sum
Clear
In
Data accumulator
Read
Memory Readout Display
Digital signal
Delay
XBL 712-2748

Fig. 2

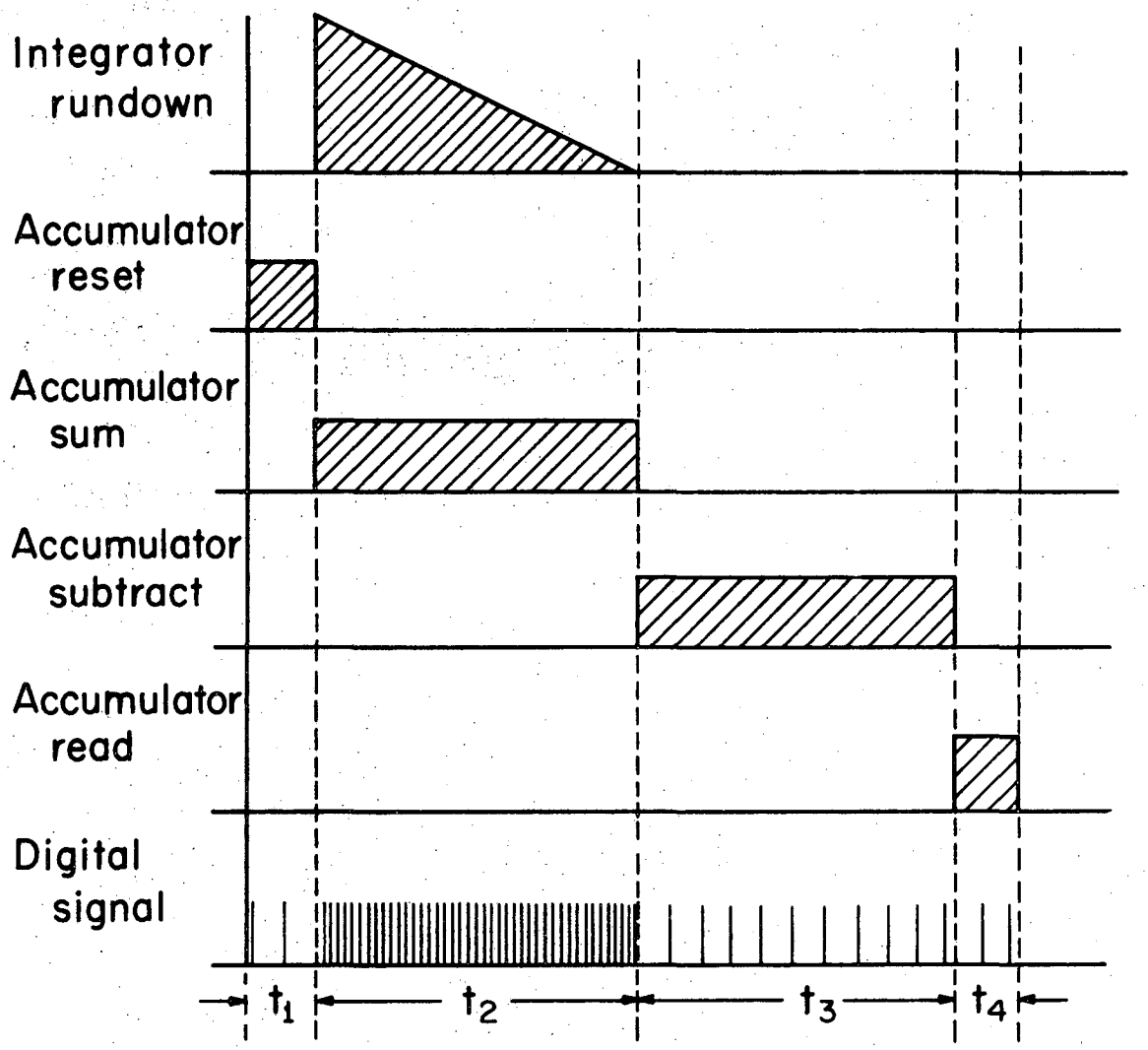

Conditions: t_1 = delay-line time; $t_2 = t_3$.

XBL 712-2749

Fig. 3

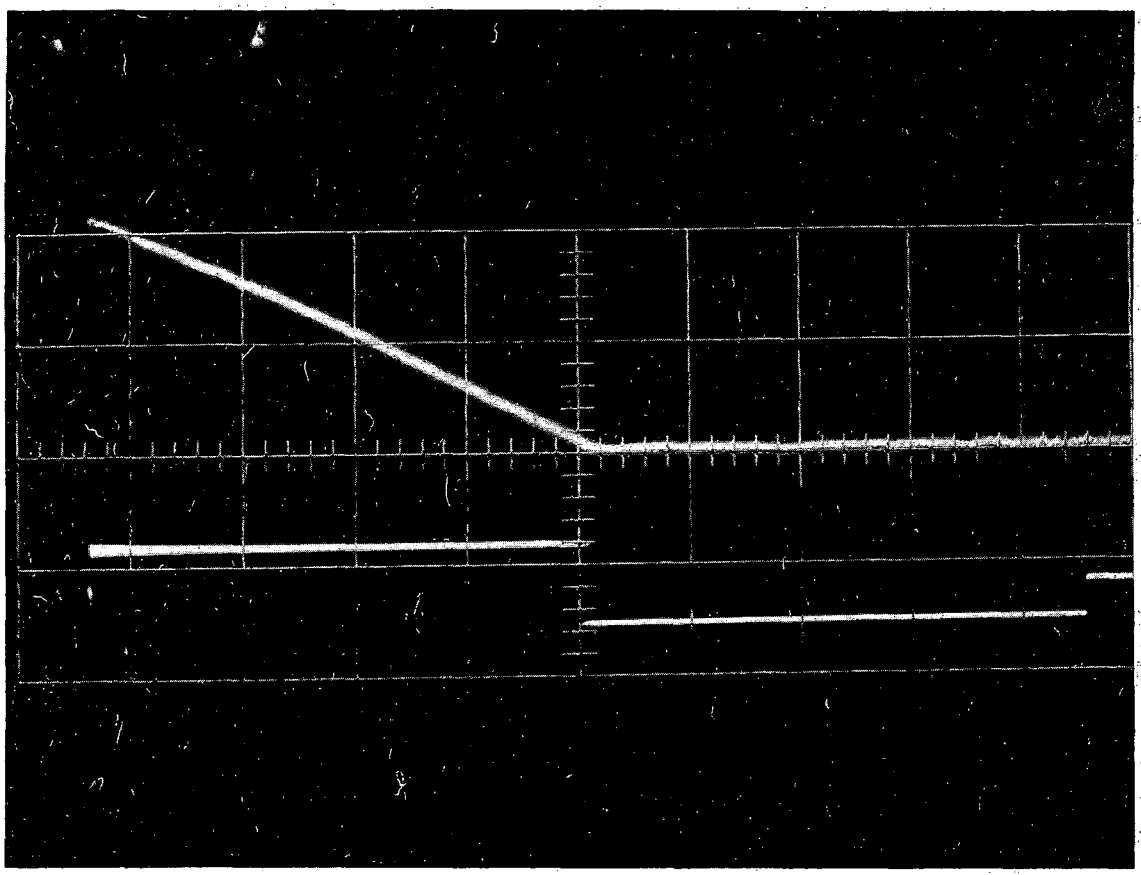

XBB 712-471

Fig. 4

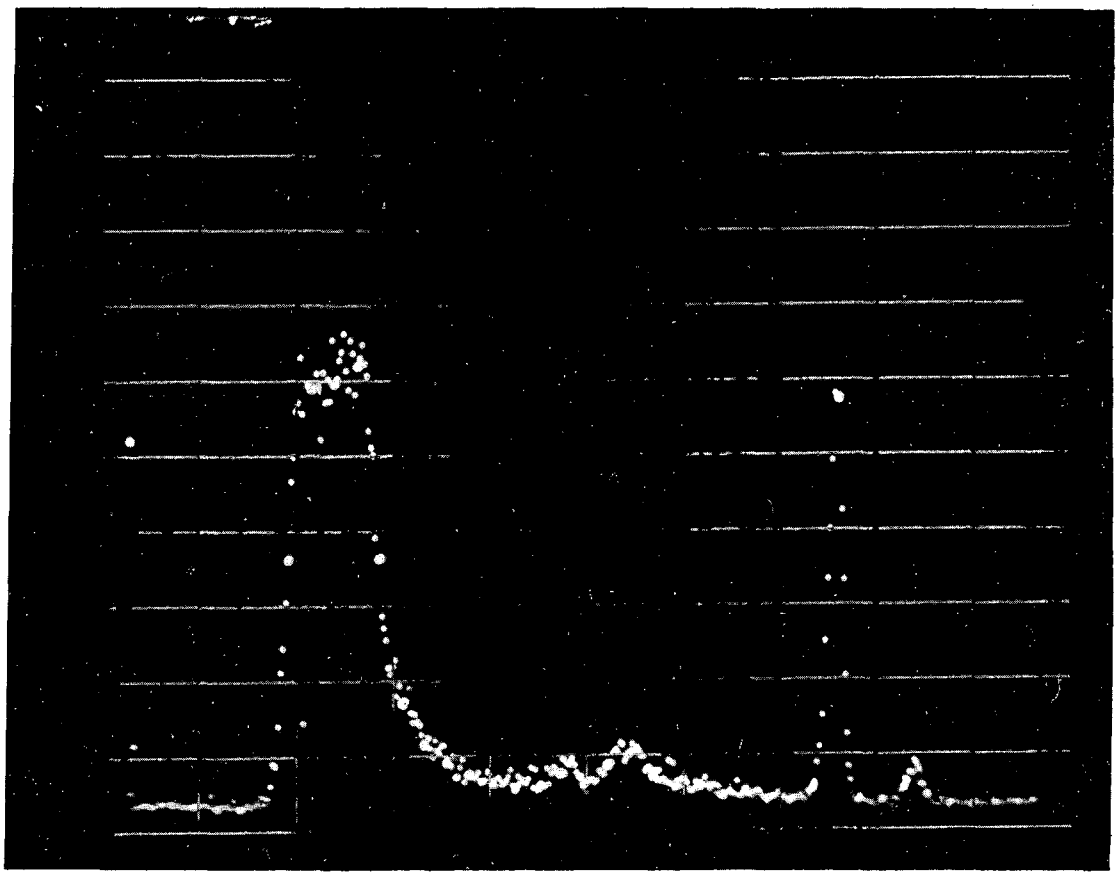

XBB 712-472

Fig. 5

LEGAL NOTICE

This report was prepared as an account of work sponsored by the United States Government. Neither the United States nor the United States Atomic Energy Commission, nor any of their employees, nor any of their contractors, subcontractors, or their employees, makes any warranty, express or implied, or assumes any legal liability or responsibility for the accuracy, completeness or usefulness of any information, apparatus, product or process disclosed, or represents that its use would not infringe privately owned rights.

TECHNICAL INFORMATION DIVISION
LAWRENCE RADIATION LABORATORY
UNIVERSITY OF CALIFORNIA
BERKELEY, CALIFORNIA 94720