Submitted to Physical Review

UCRL-20498
Preprint c.2

DETERMINATION OF CHARGE AND MASS DISTRIBUTION IN THE FISSION OF ^{252}Cf

E. Cheifetz, J. B. Wilhelmy, R. C. Jared, and S. G. Thompson

June 1971

AEC Contract No. W-7405-eng-48

TWO-WEEK LOAN COPY

This is a Library Circulating Copy which may be borrowed for two weeks. For a personal retention copy, call Tech. Info. Division, Ext. 5545

LAWRENCE RADIATION LABORATORY
UNIVERSITY of CALIFORNIA BERKELEY

UCRL-20498 c.2

DISCLAIMER

This document was prepared as an account of work sponsored by the United States Government. While this document is believed to contain correct information, neither the United States Government nor any agency thereof, nor the Regents of the University of California, nor any of their employees, makes any warranty, express or implied, or assumes any legal responsibility for the accuracy, completeness, or usefulness of any information, apparatus, product, or process disclosed, or represents that its use would not infringe privately owned rights. Reference herein to any specific commercial product, process, or service by its trade name, trademark, manufacturer, or otherwise, does not necessarily constitute or imply its endorsement, recommendation, or favoring by the United States Government or any agency thereof, or the Regents of the University of California. The views and opinions of authors expressed herein do not necessarily state or reflect those of the United States Government or any agency thereof or the Regents of the University of California.

DETERMINATION OF CHARGE AND MASS DISTRIBUTION IN THE FISSION OF ^{252}Cf*

E. Cheifetz†, J. B. Wilhelmy, R. C. Jared, and S. G. Thompson

Lawrence Radiation Laboratory
University of California
Berkeley, California 94720

June 1971

ABSTRACT

A new technique is presented for determining mass and charge distribution in fission. This method is based on obtaining the independent yields of the even-even fission products from the measured intensities of $2^+ \rightarrow 0^+$ ground-state band transitions de-exciting the prompt fission products. Transition intensities for members of ground-state bands in 36 even-even fission-product nuclei have been used to determine the centroids (Z_p) and widths (σ_Z) of the charge distribution for eight chains of fission products with constant mass and also to determine the centroids (Z_A), widths (σ_A) and yields (Y_Z) of the mass distribution for twelve chains of fission products with constant charge. The method has been applied to analyze the charge and mass distributions of ^{252}Cf spontaneous fission. The results when compared with the standard radiochemical and K x-ray techniques give satisfactory agreement. The discrepancies which exist are predominantly associated with regions influenced strongly by nuclear shells. Examples are given relating the observed ground-state band transition intensities with other observed fission variables such as kinetic energy release and neutron evaporation systematics.

I. INTRODUCTION

We present in this paper a new method which has been used to determine the independent yields of many of the fission products. The method is based upon the measurement of the intensities of the prompt transitions from the lowest 2^+ level to the 0^+ ground states in even-even fission fragments. These transitions have been identified in 36 of the highest independent-yield fission products in the spontaneous fission decay of ^{252}Cf.[1,2,3]

For many years studies have been made to determine the charge distribution of products formed in fission. Much of the information has been acquired through radiochemical isolation of specific short-lived fission isotopes from which independent and cumulative fission yields of several isotopes have been obtained (for a review of these results, see Wahl et al.[4]). The limiting feature in the radiochemical analysis is that the majority of the high yield prompt fission products have very short beta-decay half lives. This makes the isolation of these isotopes quite difficult, and in general very little is known about their properties or yields. Therefore, much of the data which have been used to interpret the charge distribution have come from isotopes closer to beta stability. These isotopes have longer half lives but have lower independent yields as fission products. Since the interest is in the primary distribution at the time of fission, this makes the interpretation more difficult.

Independent yields of isotopes of selected elements (e.g., krypton, rubidium, xenon, and cesium) have also been determined through the use of on-line mass separators.[5] This very accurate method is still limited to elements that are easy to extract and ionize. Both the radiochemical and isotopic mass separation techniques deal with the products in the time range of greater

than 10^{-3} sec after fission and cannot be used for correlations of the yields with physical properties of the fission process such as fragment kinetic energies and neutron emission.

With the advent of the high resolution solid-state photon detectors, the prompt K x-ray spectra of the fission products were studied extensively.[6-10] Information concerning the charge and mass distribution of the products have been deduced from the measurements. This technique overcomes one of the main radiochemical difficulties in that the high yield primary products are the ones that are sampled. However, there are difficulties with this approach in that what is desired are the yields of the products, and what is measured are the yields of the K-x rays of the products. One, therefore, makes an assumption that the K x-ray yield is proportional to the isotopic yield for any given element. This a priori assumption is difficult to justify because the low energy transitions which are presumably responsible for most of the x-ray yield cannot be predicted. In fact the K x-ray yield among the various elements produced in fission varies by a factor of over 100 and even the differences between the K x-ray yields of adjacent even Z elements are as large as a factor of two and could perhaps be larger if the K x-ray yields were not already averaged over fragments with even and odd neutron numbers. Such variations could also be expected between isotopes of the same element and would bias the determination of the independent yield. A further complication is in determining the dispersion of the charge and mass distributions. To obtain these values an unfolding procedure has to be employed which removes the effects due to the relatively poor experimental resolution in the mass determination.

From our recent experimental studies of prompt fission gamma rays and from studies of John et al.[11] on delayed gamma rays, we have been able to identify and determine the intensities of 36 lines corresponding to the $2^+ \rightarrow 0^+$ ground-state transitions of the highest independent yield even-even fission products. We shall show in the following that from considerations involving the statistical nature of the de-excitation of the fragments and the removal of their primary angular momentum the intensity of the $2^+ \rightarrow 0^+$ ground-state transitions reflect the yield of the isotopes; thus, in this way information can be obtained on the mass and charge distribution of the primary products. This method of determining the independent yields is comparable to the x-ray method in that yields can be correlated with other aspects of fission such as neutron emission and kinetic energy release, and it has a clear advantage over the x-ray method in that the information is obtained directly without having to unfold the large dispersion introduced by the mass resolution and without the uncertainties involving the x-ray yields.

II. EXPERIMENTAL

The ground-state band transitions in even-even nuclei produced in the spontaneous fission of ^{252}Cf have been identified utilizing a three and four parameter coincidence experiment in which the kinetic energies of both fragments and their associated gamma rays and K x rays were recorded. From the measured kinetic energies it was possible to determine the fragment masses and from the K x rays their atomic numbers. The experimental technique has been previously described,[1-3] and we shall explain here only those aspects of the experiment which are related to extraction of transition intensity values.

The experimental set-up from which the intensity information has been obtained is shown in Fig. 1. The ^{252}Cf source was plated on one of the fragment detectors (F1) and thus all transitions from the fragment entering this detector having a lifetime longer than the characteristic stopping time of fission fragments in solids ($\sim 10^{-12}$ sec) appeared without Doppler shifting and broadening. The gamma ray lines associated with fragments that were detected by the second solid-state detector (F2), which was separated from F1 by 8 mm, were sharp and unshifted if they were emitted after the fragment arrived at F2 and were broadened and shifted when they were emitted by the fragment in flight. The ratios of the non-Doppler-shifted line intensities associated with the fragments when they were stopped in F1 and when they were stopped in F2, corrected for the different geometrical efficiencies associated with detecting gamma rays from F1 and F2 positions, were used to obtain information about the half-life values of the transitions in the region 0.2 - 2 nsec. Any transition with a lifetime longer than 2 nsec was observed with essentially equal intensity whether the emitting fragment was stopped in detector F1 or F2.

The gamma-decay scheme of a typical even-even fission product is shown in Fig. 2. Members of the ground-state band decay by a cascade of E2 transitions to lower spin levels of the band. They are fed by either the higher state in the ground-state band or from many other states outside the ground-state band. The energies of the levels of the ground-state band are well fitted by the variable moment of inertia model[12] systematics which relates the energies of the 6^+, 8^+, 10^+, etc. states to the energies of the 4^+ and 2^+ states. These relationships have been used to ascertain the identity of the observed transitions and to make predictions of the energies of transitions that have not been observed due to low intensity and complexity of the spectra. Table I is a summary of the experimental data and predictions related to the 2^+, 4^+, 6^+, and 8^+ states of the ground-state band. Details concerning the values in the table are given below.

1. Energies: The observed transition energies of the $2^+ \rightarrow 0^+$, $4^+ \rightarrow 2^+$, $6^+ \rightarrow 4^+$, and $8^+ \rightarrow 6^+$ transitions are listed in the table and are accurate to better than ± 0.5 keV for the cases which include a decimal point and are accurate to within ± 1 keV for the remainder of the data. Energy values given in parentheses are either predicted values derived from the variable moment of inertia systematics or energies of weakly observed transitions which are in agreement with the variable moment of inertia systematics but which have not been identified with certainty as belonging to the nucleus in question. The uncertainty of the predicted energy values can be as large as 50 keV. Predictions have been made only in the cases where the energies of the 4^+ state ($E4^+$) and the 2^+ state ($E2^+$) satisfy the relation $E4^+/E2^+ \geqslant 2.23$.

2. Intensity: The intensity values represent the total transition intensities, i.e. the intensity of the observed gamma ray corrected for electron conversion and for emission of delayed components. The intensities of the gamma-ray lines were obtained by fitting the peaks in the gamma-ray spectra associated with 2 amu ranges of fragment masses and then summing the intensities of lines with the same energy appearing in neighboring spectra. The fitting was performed by using pre-determined line shapes and straight-line background according to the method of Routti and Prussin.[13] Some systematic errors were possibly introduced by the arbitrary choice of the straight-line background and by the general complexity of the spectra. Additional uncertainties in the absolute intensities were caused by the uncertainties in the exact distribution of the ^{252}Cf source on the fission detector which was in close proximity to the gamma-ray detector. Altogether we estimate an uncertainty of 15% for gamma lines with a yield of greater than 1% per fission and 25% for lines with lesser intensity. These uncertainties exceed the statistical errors associated with the fitting procedure. Intensity values are also given for some of the observed transitions, the assignments for which as $6^+ \rightarrow 4^+$ and $8^+ \rightarrow 6^+$ are uncertain (indicated by parentheses in the energy column). An underestimate of the transition intensities could occur in the cases where the half-life values of the transitions are comparable to the $\sim 10^{-12}$ sec stopping time of the fragments in the plated detector. In such cases a significant portion of the decay was Doppler shifted and broadened and thus was not included in the total intensity values of Table I. Cases where the above-mentioned situation could occur are associated with the independent feeding of the 2^+ states in ^{132}Te (974 keV), ^{134}Te (1278 keV) and ^{136}Te (1134 keV or 688 keV), and ^{136}Xe (1313 keV). No attempt was made to correct the data of

Table I for effects associated with these very short half-life values. No definite assignments have been made for the $2^+ \rightarrow 0^+$ in ^{136}Te. The most intense gamma rays that were present in the spectra and could be associated with this isotope were at energy 1134 keV with an intensity of 0.68%/fission or 688 keV with 0.81%/fission. The energies of either of these lines could be in agreement with the systematic behavior of the energies of the 2^+ states in this region, and thus both mentioned intensity values were associated with ^{136}Te.

3. Yield of K x rays: The yields of the K x rays associated with the tabulated transitions of the ground-state bands of the even-even fission products were calculated directly from the measured or predicted gamma-ray energies and intensities using the known K-conversion coefficients. In the cases where the $6^+ \rightarrow 4^+$ and/or $8^+ \rightarrow 6^+$ transitions have not been identified experimentally, the intensities of these transitions have been assumed to be 45% and 20% respectively of the $2^+ \rightarrow 0^+$ transition intensities. The uncertainties in the K x ray yields due to uncertainties in the predicted energies or intensities are in general insignificant as these transitions are usually of high energies and thus have low contributions to the x-ray yield. The K x-ray yields are given in units of 10^{-4}/fission and include all of the contributions of the delayed transitions with half-lives up to 3 μsec. These values can be corrected for any observation time by considering the contributions of the specific delayed components in the decay.

4. Delayed component transitions: Information is summarized on transitions of the ground-state band that have or are fed by delayed components of up to 3 μsec lifetimes. The total intensity of the delayed component (including a correction for electron conversion) is given for the highest spin member of the ground-state band fed by the delayed decay. The data concerning delayed

transitions longer than 10 nsec are based on the results of Ref. 11. The results of Ref. 11, however, are rather uncertain when the lifetimes of the transitions are less than 10 nsec and therefore are not used in Table I. It should be noted that the lifetimes of the $2^+ \rightarrow 0^+$ transitions for isotopes lighter than ^{150}Ce listed in Table I are less than 2 nsec; these results are summarized in Refs. 1-3.

III. VALIDITY OF THE PROPOSED METHOD

The basic underlying assumption of this work is that the total intensities of the lowest $2^+ \rightarrow 0^+$ ground state observed in the pre-beta decay de-excitation of the even-even fission products reflects to a high degree of accuracy (5%) the total independent yields of these isotopes. The evidence for the validity of the assumption is summarized below.

1. Some of the $2^+ \rightarrow 0^+$ transitions of the fragments from spontaneous fission of ^{252}Cf have been observed with absolute intensities of more than 3% per fission, e.g., ^{104}Mo, 3.37%; ^{106}Mo, 3.37%; ^{110}Ru, 3.49%; ^{144}Ba, 3.60%. On the basis of radiochemical studies of the width of the distributions of the independent yields of various mass chains the most abundant single isotopes are expected to be produced with a yield smaller than 3.5% per fission. The fact that some $2^+ \rightarrow 0^+$ transitions associated with the most abundantly produced single isotopes are observed with such high yields indicates that these transitions indeed represent most of the independent yields of the isotopes in question.

2. Experiments measuring the ratio of the population of isomeric levels in fission product nuclei[14,15] and those studying gross gamma-ray anisotropies[16] have determined that the magnitude of the primary angular momentum of the fission products is approximately 6-9 units of $\hbar$. Currently we have performed a statistical analysis of the intensities of transitions in ground-state bands of the even-even products that has shown that 95-98% of the isotopic yield will be represented as the $2^+ \rightarrow 0^+$ ground-state band transition. Details of these calculations will be presented elsewhere[17] but basically it is assumed that the primary fission products have an angular momentum distribution given by[15] $P(J) \propto (2J + 1) * \exp[-J(J + 1)/B^2]$ where B is a parameter which represents

approximately the rms value of $J + \frac{1}{2}$. The primary fragment de-excites by emission of neutrons and gamma rays. For each transition the change in angular momentum is determined using the procedure of Huizenga and Vandenbosch,[18] in which the statistical transition probabilities are taken to be proportional to the availability of specific angular momentum states in the nucleus. The nuclear spin distribution is given by a simple spin dependent Fermi-gas level density formula

$$\rho(E,J) \propto \rho(E) * (2J+1) \exp\left[-(J + \tfrac{1}{2})^2/2\sigma^2\right] \quad ,$$

in which σ is the "spin cutoff" parameter and has been determined from analyses of other experimental data[18,19] to have a value of $\sim 3, 4$. Figure 3 presents an example of the results of these calculations and shows that very little of the de-excitation process bypasses the $2^+ \rightarrow 0^+$ ground-state band transition.

3. The relative intensities of the members of the ground-state band of the even-even fragments are very similar to the relative intensities of the members of the ground-state band of even-even products of $(\alpha,2n)$ reactions[20-25] as indeed the angular momentum of the primary products in both cases is very similar. Unfortunately we are not aware of any study that compares accurately the 0^+ ground-state yield in such reactions to the lowest $2^+ \rightarrow 0^+$ ground-state transition intensity; however, in the work of Lederer et al.[25] on gamma rays following $(\alpha,2n)$ reactions in even ruthenium and molybdenum nuclei the highest intensity transition that was associated with a decay that fed the 0^+ ground state and bypassed the lowest 2^+ state comprised 2.7% of the lowest $2^+ \rightarrow 0^+$ ground-state transition. Although this is not conclusive evidence that no other gamma rays feed the 0^+ ground state, this evidence could be used as an indication for

the validity of our assumption that the 2^+ state represents over 90% of the 0^+ yield. In general, unlike the situation in beta decay, very little feeding of the second 2^+ state (that could decay directly to the ground state) has been observed in $(\alpha,2n)$ reactions leading to even-even products.

IV. RESULTS

A. Independent Yield Distributions

The measured gamma-ray intensities were analyzed by two separate methods to determine the fission-product distributions. The first analysis was to determine Z_p (the most probable charge for each mass chain) and σ_Z (the standard deviation of this distribution). The independent yields of the products, Y(Z,A), are assumed to have, for each mass chain, a Gaussian distribution centered about Z_p.

$$Y(Z,A) = \int_{Z-\frac{1}{2}}^{Z+\frac{1}{2}} \frac{Y(A)}{\sqrt{2\pi}\,\sigma_Z} \exp - [(Z - Z_p)^2/2\sigma_Z^{\,2}]dZ \quad . \qquad (1)$$

There are three parameters associated with this distribution: Y(A), σ_Z, and Z_p. The parameter Y(A), the total mass chain yield, has been measured independently[26] by radiochemical techniques and therefore is not a free parameter. The remaining two parameters can, in principle, be determined by a least-squares fitting procedure. Since the distributions are relatively narrow and the independent yields from the gamma-ray analysis are only known for even-even isotopes, there were no mass chains for which more than two independent yields were found. Therefore Eq. (1) was analytically solved to give the values of Z_p and σ_Z for eight mass chains (A = 102, 106, 112, 136, 140, 144, 146, 154). A significant error may be present in the number associated with the mass chain 136 due to the expected short life time of 2^+ states. The results are presented in Table II along with the Z_p values obtained from K x-ray studies of Watson *et al.*[8] and those of Reisdorf *et al.*[10] The errors quoted on Z_p represent the

propagation of the statistical errors associated with the independent yields. The fact that the 2^+ states may represent only 90% of the independent yields and that a systematic error of ± 10% may have been present in the determination of absolute transition intensities has not been included. The average value of σ_Z calculated from the individual σ_Z values of Table I by weighting each value with the square of the reciprocal of the quoted uncertainty is $\bar{\sigma}_Z = 0.595 \pm 0.011$. It is clear from comparing the spread of the values of σ_Z in Table II with $\bar{\sigma}_Z$ that some variation in the σ_Z values among the various mass chains occurs; however, this could be due to a deviation of the actual distributions from the a priori assumed Gaussian shapes. A value of $\bar{\sigma}_Z = 0.56 \pm 0.06$ has been deduced from the current radiochemical data of $^{235}U(n_{th},f)$[4] which is in good agreement with the presented average value for ^{252}Cf.

The second method used to analyze the data was to determine information on the fission product distribution with respect to mass. In this representation the data are analyzed for constant Z values. The formalism used to define the distributions is analogous to that used for the charge distribution.

$$Y(Z,A) = \int_{A-\frac{1}{2}}^{A+\frac{1}{2}} \frac{Y(Z)}{\sqrt{2\pi}\,\sigma_A} \exp - [(A - A_p)^2/2\sigma_A^2]dA \quad . \qquad (2)$$

Again the distribution was assumed to be Gaussian. The three parameters are Y(Z) (the total prompt yield of each element), σ_A (the standard deviation of the distribution of individual isotopes for each Z value), and A_p (the mean of the mass distribution). They were determined by least-squares fitting the measured independent yields to Eq. (2). In a strict mathematical sense Eqs. (1)

and (2) cannot, in general, both represent the distribution of the products. However, to the accuracy of this model, it is as a priori valid to assume that the distribution is Gaussian in the constant Z plane as in the constant A plane. Also the two representations agree closely in the region where the mass yield distribution is flat. There were ten isotopic chains for which three or more yields were known. For two chains Z = 38 and 48 we assumed the value of σ_A to be the same as in the neighboring even elements (assumed σ_A values are given in parentheses). Table III is a summary of the values of A_p, σ_A, and Y(Z) as derived from the experimental points and includes for comparison the A_p values of Watson et al.[8] and Reisdorf et al.[10] as well as the yields that have been calculated by Reisdorf et al. Also given are the total number of neutrons derived from comparing the A_p values of complementary elements and the values of the average number of emitted neutrons as measured by Bowman et al.[27] The errors presented in Table III were calculated from the propagation of the estimated uncertainties in the independent yields of the even-even isotopes. It should be noted that significant errors could have been introduced into the determined values of A_p, Y, and σ_A by the isotopes which have 2^+ states with half-life values of less than 10^{-12} sec. This applies in particular to ^{98}Zr, ^{132}Te, ^{134}Te, ^{136}Te, and ^{136}Xe. In the case of ^{134}Te, the independent yield of that isotope could be much higher, thus increasing the total elemental yield of tellurium and bringing its A_p value closer to mass 134.

Several self-consistency checks were made of the results:

1. Neutron emission: The average number of neutrons emitted ($\bar{\nu}_{total}$) was obtained by subtracting the sum of the A_p values of complementary Z elements from 252 and compared with the number of neutrons emitted from ^{252}Cf obtained

by Bowman et al.[27] This comparison has the drawback that the latter measurements did not distinguish atomic numbers of the emitting isotopes in any given mass region; therefore, some significant differences between our values of $\bar{\nu}_{total}$ and those of Bowman et al.[27] could exist due to odd-even effects for example. As is evident from Table III the agreement between $\bar{\nu}_{total}$ values derived from our A_p values and neutron measurements is reasonably good for the pairs of the more abundant elements (40,58), (42,56), and (44,54). The disagreement in the case (46,52) could be due to the probable systematic errors in measuring the yields of the Z = 52 isotopes.

2. Yield of complementary elements: The fact that charged particle emission (aside from the two fragments) is very rare in fission and can therefore be neglected for our discussion implies that the yield of complementary elements should have been equal. Only for two pairs out of five presented in Table III did the deviations between yields of complementary pairs fall within one standard deviation of the estimated uncertainty. On the basis of statistical considerations the expected deviation between complementary pairs should be 12.1%, whereas the observed average deviation between such pairs was 19.9%. Again the short half-life values of some of the 2^+ states might have been responsible for underestimates of the yields of elements 40, 52, and 54. Another possible reason for the inconsistency of the yields of complementary fragments could be the failure of the a priori assumption of a Gaussian function for describing the independent yields of isotopes of a mass chain or of an element. This subject and its implications will be discussed later.

3. Yields of light and heavy fragments: The sum of yields of the even Z light fragments of Table III was 45.1% and the value for the even Z heavy

fragments was 45.2%. Both numbers should be roughly 50%. Considering the facts that the independent yields of the fragments were measured without any predetermined normalization and that the evaluation of the yields depends upon including absolute efficiency determination of the gamma detection system and that perhaps up to 10% of the decays bypassed the 2^+ states, the results can be considered as a confirmation of the presented method.

4. Relationship of σ_A and σ_Z: The mass distribution in fission has a much larger width than the charge distribution of any mass chain or the mass distribution of isotopes of any given element; therefore, $\bar{\sigma}_A$ and $\bar{\sigma}_Z$ should be approximately related by the post-neutron charge to mass ratio $\bar{\sigma}_Z/\bar{\sigma}_Z \approx 98/248 = 0.395$. The value obtained for this ratio was $\bar{\sigma}_Z/\bar{\sigma}_A = 0.408 \pm 0.012$ which is in good agreement with the predicted value.

Comparison of the A_p values derived from the gamma-ray intensities and the values derived by Watson et al.[8] by the x-ray technique showed a clear deviation at Z = 54. The fact that the xenon fission products include the closed shell region around ^{136}Xe and the expected deformed region around ^{142}Xe may have been responsible for emission of disproportional numbers of K x rays from the heavier xenon isotopes in the time range of Watson's experiment (100 nsec). If such a systematic variation in K x-ray yield occurs, the analysis of Watson which assumes a constant yield of K x rays per element would result in a derived value of A_p which is higher than the true experimental distribution. Figure 4 shows the absolute value of the deviation of the Z_p values from equal charge division in fission. The experimental points represent pre-neutron emission mass determinations and were obtained using the average neutron distributions of Bowman et al.[27] The solid line in Fig. 4 are from the results of Watson

et al.[8] In comparing our A_p value with those of Reisdorf et al.[10] good agreement was obtained in all the cases except for Z = 38 and Z = 52. The disagreement in the case of Z = 52 could be associated with the error introduced into our evaluation of the A_p value by the very short half life of the 2^+ state of ^{134}Te. In the case of strontium (Z = 38) we have observed $2^+ \rightarrow 0^+$ transitions in two isotopes: ^{94}Sr 837.4 keV with a yield of 0.51%/fission and ^{96}Sr 815.5 keV with a yield of 0.34%/fission. Both the $2^+ \rightarrow 0^+$ transitions had been identified through the beta decay of mass separated rubidium isotopes by J. Chaumont and R. Foucher et al.[5] The two transitions are very close in energy; therefore, the determination of their relative yield is essentially independent of any efficiency calibration procedure, and since they have approximately the same yield, the determination of A_p is rather insensitive to the assumed value of σ_A. Since A_p is somewhere between 94 and 96, a rough estimate of it can be obtained from a simple average of the two independent yields which gives $A_p = 94.80$ in agreement with the value derived by fitting a Gaussian distribution to the experimental values.

The basic hypothesis in determining the properties of the prompt fission products distribution has been that the independent yields could be represented by a simple Gaussian function. Statistical checks can be performed to experimental data to see if this is a valid assumption. The most complete determination of independent yields of specific elemental chains are for the rubidium and cesium isotopes. Wahl et al.[4] have summarized the independent yields of the 11 rubidium isotopes and the 10 cesium isotopes that have been determined from the thermal neutron-induced fission of ^{235}U. We have taken these data points and their reported uncertainties and performed a weighted least-squares fit to the functional distribution given in Eq. (2). Three cases have been considered using

different sets of the data. In the first case all data points were used in the fit. In the second case the only points used were those which came from a single experiment in which an on-line mass separator was used to determine the independent yields. These data points consisted of the most abundant isotopes of the two elements considered and were estimated to include over 95% of the elemental yield. In the third case a fit was made using only three values of the most abundant odd-A isotopes. This approach simulates a situation such as has been reported here in which only three data points are known for each element. In this case, to be consistent with our previous analysis, we have assumed that the uncertainties in the yields were ± 15% for isotopes having yields greater than 1%/fission and ± 25% for those with yields less than 1%/fission. The obtained results for A_p, σ_A, and Y including their statistical uncertainties (based on the validity of the Gaussian distribution) are presented in Table IV for the three cases considered. Least-squares fitting of a Gaussian distribution to all of the rubidium yields gives a χ^2 value of 181. This very large value of χ^2 gives a level of significance to the fit of less than 10^{-3} which shows that the data are poorly represented by the Gaussian assumption. Nevertheless, comparison of the A_p, σ_A, and Y values of the fit of three most abundant odd-A isotopes with the fit of all the mass separation values shows that reasonable consistency with a range of 0.1 in A_p, 0.2 in σ_A and 20% in the total elemental yields is obtained and thus for practical applications the actual distribution can be estimated as a Gaussian if the data points are taken in proximity to the center of the distribution.

In the case of rubidium the inclusion of the two shielded nuclei ^{84}Rb and ^{86}Rb which have negligible yields compared to the other rubidium isotopes

causes a significant shift in the A_p value when the yields are fitted by a Gaussian. In a strict mathematical sense the Gaussian function fails to represent the distribution of the independent yields; therefore, the errors quoted for A_p, σ_A, and Y in Tables II, III, and IV are not realistic. This could perhaps be the cause of the difficulties of the consistency tests mentioned earlier, as uncertainties of 0.1 in A_p and 0.2 in σ_A and 20% in the yields are perhaps inherent in the presented approach.

B. Yield of K X Rays

The K x-ray yields associated with the de-excitation of the ground-state bands have been calculated from the experimental and predicted values of the intensities of the transitions and are summarized in Table I. The yield of K x rays from an even-even isotope will be dominated by internal conversion of members of the ground-state band when the energy of any of the transitions de-exciting this band is less than ∿ 300-400 keV. In the other cases the non-ground-state band transitions which have energies of ∿ 800 keV will probably substantially contribute to the total K x-ray yield.

A summary of the K x-ray yields of even-Z elements produced in the spontaneous fission of ^{252}Cf is given in Table V. The K x-ray yields associated with only the ground-state bands of the isotopes listed in Table I and with transitions having lifetimes shorter than 3 μsec are summarized in the first column. The second column is the result of the experiments of Watson *et al.*[8] which required the K x rays to be emitted within 100 nsec of fission. The third column contains the results of Reisdorf *et al.*[10] who measured the K x rays emitted within about 1 nsec of fission.

In the case of tellurium the contribution of the even isotopes exceeds the observed value reported by Watson for the entire tellurium yield. This is presumably because the K x rays are produced predominantly from the conversion of the $6 \rightarrow 4$ transition of ^{134}Te. This state has a half life of 160 nsec and thus not all the emitted K x rays were observed by Watson. Apparently most of the K x rays associated with tellurium fragments come from ^{134}Te and thus this is an example in which a single transition can dominate the x-ray yield for an entire element. In the cases of deformed fragments such as zirconium, molybdenum, barium, cerium, and neodymium the decay within the ground-state band of the even-even isotopes which goes via low-energy transitions with relatively high conversion coefficients accounts for $\sim$ 25% of the K x-ray yields as observed by Watson. In the cases of even-even nuclei having low conversion coefficients associated with the ground-state band transitions as is the case in ruthenium, palladium, and xenon the odd isotopes apparently contribute in much greater proportion to the K x-ray yields, and therefore, apparently bias the distribution when it is assumed that all isotopes have constant K x-ray yields.

C. Correlations Between Independent Yields and Other Fission Properties

The fact that the production of specific isotopes can be detected in most cases within 1 μsec of the fission event by the observation of the prompt gamma decay opens the possibilities of studying correlations between independent yields of some fragments and total kinetic energy of the fragments, neutron emission, and production of various complementary fragments. As an example of the power of the presented experimental method, two types of correlations are presented. In the first the yields of specific isotopes of ruthenium were

correlated with the total kinetic energy of the fragments. This was done by sorting the gamma-ray spectra into both mass intervals and kinetic energy intervals and summing the yields of the $2^+ \rightarrow 0^+$ transitions of ^{108}Ru, ^{110}Ru, and ^{112}Ru for each of three kinetic energy intervals. The results are presented in Table VI. The total energy release in fission for the formation of any ruthenium isotope is approximately constant and can be considered as the sum of a kinetic energy term and an internal excitation energy term. Therefore the more neutron deficient isotope (^{108}Ru) had originally higher internal excitation energy and thus is correlated with a lower total kinetic energy. Conversely the neutron-rich isotope (^{112}Ru) had less internal excitation energy and is therefore correlated with the higher kinetic energy release.

The second example concerns correlations between the yield of complementary fragments and their total kinetic energy. This information was derived from γ-γ coincidence data which was obtained by placing a second γ-ray detector behind the fission-fragment detector F_2 (see Fig. 1). The correlations were studied for pairs of complementary even-even fragments in which one of the fragments had a transition with a sufficiently long lifetime (over 0.5 nsec) so that a substantial part of the gamma decay would occur after the fragment traversed the distance between the detectors and was stopped in the F_2 detector. Thus a part of both the $2^+ \rightarrow 0^+$ transitions of complementary fragments appeared non-Doppler-shifted and sharp. Figure 5 presents the yield of two complementary pairs of prompt products (^{104}Mo - ^{144}Ba and ^{106}Mo - ^{144}Ba) as a function of the total kinetic energy release. By identifying a pair of fragments, the total neutron emission associated with the event is determined. Although the statistical uncertainties in the distributions are large due to background subtraction,

it is evident that events with emission of two neutrons (^{144}Ba - ^{106}Mo) are correlated with higher kinetic energy than events with four emitted neutrons (^{144}Ba - ^{104}Mo); furthermore, the differences in the mean kinetic energy of the two distributions is about 7 MeV/neutron which is in good agreement with the value of 6.6 MeV/neutron that Bowman et al.[27] found for the variation of the total number of emitted neutrons as a function of total kinetic energy of the fragments, and it is also in agreement with the energy required for the emission of two neutrons from the initial fragments, i.e. ∿ 11 MeV in binding energy and 3 MeV in average neutron kinetic energy.

The width of the presented distributions is roughly 15 MeV (FWHM) with a large uncertainty. Since the kinetic energy distribution should be narrow when the two emitted fragments are known and consequently the total number of emitted neutrons is determined, the width therefore predominantly reflects the large dispersion in the kinetic energy measurement of this experiment. The effects that are inherent in the fission process and would contribute to the width, such as variation in neutron emission between the initial fragments, variation in neutron kinetic energies and variation in total gamma-ray energy, are presumably much smaller than the observed width.

V. CONCLUSIONS

We have presented a new method for determining mass and charge distribution in fission. This technique is based on the correlation of the intensities of transitions de-exciting the ground-state bands in even-even prompt fission nuclei with the independent yields of the isotopes. The principle advantage is that the high yield prompt fission products are sampled. This overcomes the primary limitation of the standard radiochemical techniques which are usually not rapid enough to chemically isolate the short-lived beta decaying nuclei. The chemical studies are often limited therefore to cumulative-yield determinations, and thus much is lost about the details of the distribution. The other method commonly used to determine fission yield distributions is based on K x-ray measurements and this analysis necessitates assumptions about absolute x-ray yields and mass resolution considerations which we are able to avoid by observing the prompt ground-state band gamma rays. The primary disadvantages of the technique is that it is currently limited to even-even isotopes and thus only approximately one fourth of the isotopes are available for analysis. This, of course, precludes any information on odd-even effects in fission yields.

Quantitative comparison of results of the various methods gives satisfactory agreement in most regions. The deviations exist in regions around nuclear shells (most notably the tellurium isotopes) where assumptions dealing with both the K x-ray yields and with the intensities of ground-state band transitions are open to criticism.

By studying prompt gamma rays correlated with individual fragments it is possible to extract additional information relevant to the fission process. The cited two examples of this are the correlations of isotopic yields with

kinetic energy release and the simultaneous observation of complementary pairs of products to extract information on energy distribution in the fissioning system.

To obtain the mass and charge distribution in fission we have used the experimentally determined $2^+ \rightarrow 0^+$ ground-state band transitions of even-even isotopes produced in the spontaneous fission of ^{252}Cf. This technique, however, would be applicable to any fissioning species for which the prompt gamma rays could be measured. For most readily fissionable nuclei, the same isotopes are produced (in varying yields) as prompt fission products. Since now that the ground-state band transitions have been determined in the majority of the even-even isotopes, it should be possible to obtain the details of the mass distribution by measuring the intensities of these transitions. In this case the uncertainties in the determination of the mass distribution will be dependent on the accuracy with which the intensities of the gamma transitions can be measured. With continued improvement in detector resolution and with adequate efficiency calibration it should be possible to make such measurements to an accuracy of $\sim$ 5%. In this experiment the intensities of the transitions were obtained from the gamma-ray spectra which were associated with measured mass intervals. At the present gamma-ray energy resolution (1 keV FWHM at 100 keV) this procedure is essential for obtaining intensities of weak lines (less than about 1%/fission); however, when one of the fragments is stopped immediately in a solid and thus emits non-Doppler shifted lines, many of the intense lines (> 1%/fission) can be observed in the gross unsorted prompt gamma-ray spectrum.

In addition however, there are still the fundamental limitations associated with the relative intensity of the $2^+ \rightarrow 0^+$ transitions and with the assumptions regarding the Gaussian distribution of the fission products.

ACKNOWLEDGMENTS

We would like to thank Dr. John Unik for his comments on portions of the presented work and for sending us unpublished results of his work.

FOOTNOTES AND REFERENCES

*Work performed under the auspices of the U. S. Atomic Energy Commission.

†On leave of absence from the Weizmann Institute of Science, Rehovoth, Israel.

1. E. Cheifetz, R. C. Jared, S. G. Thompson, and J. B. Wilhelmy, Phys. Rev. Letters 25, 38 (1970).
2. J. Wilhelmy, S. G. Thompson, R. C. Jared, and E. Cheifetz, Phys. Rev. Letters 25, 1122 (1970).
3. E. Cheifetz, R. C. Jared, S. G. Thompson, and J. B. Wilhelmy, in Proceedings on the International Conference on the Properties of Nuclei Far From the Region of Beta-Stability, Leysin, Switzerland, 1970 (CERN, Geneva, 1970), Vol. 2, p. 883.
4. A. C. Wahl, A. E. Norris, R. A. Rouse, and J. C. Williams, in Proceedings of the Second IAEA Symposium on the Physics and Chemistry of Fission, Vienna, Austria, 1969 (International Atomic Energy Agency, Vienna, 1969), p. 813.
5. Jacques Chaumont, (Ph.D. Thesis), University of Paris, Faculty of Sciences, Orsay, Report No. 726, 1970 (unpublished); R. Foucher, private communication.
6. L. E. Glendenin and J. P. Unik, Phys. Rev. 140, B1301 (1965).
7. S. S. Kapoor, H. R. Bowman, and S. G. Thompson, Phys. Rev. 140, B1310 (1965).
8. R. L. Watson, H. R. Bowman, and S. G. Thompson, Phys. Rev. 162, 1169 (1967); R. L. Watson, R. C. Jared, and S. G. Thompson, Phys. Rev. C1, 1866 (1970).
9. L. E. Glendenin, H. C. Griffin, W. Reisdorf, and J. P. Unik, in Proceedings of the Second IAEA Sympogium on the Physics and Chemistry of Fission, Vienna, Austria, 1969 (International Atomic Energy Agency, Vienna, 1969), p. 781.
10. W. Reisdorf, J. Unik, H. Griffin, and L. Glendenin, private communication.

11. Walter John, Frank W. Guy, and J. J. Wesolowski, Phys. Rev. C2, 1451 (1970).

12. M. A. J. Mariscotti, Gertrude Scharff-Goldhaber, and B. Buck, Phys. Rev. 178, 1864 (1969).

13. J. T. Routti and S. G. Prussin, Nucl. Instr. Methods 72, 125 (1969).

14. H. Warhanek and R. Vandenbosch, J. Inorg. Nucl. Chem. 26, 669 (1964).

15. Demetrios Sarantities, Glen E. Gordon, and Charles Coryell, Phys. Rev. 138, B353 (1965).

16. Marvin M. Hofmann, Phys. Rev. 133, B714 (1964).

17. J. B. Wilhelmy, E. Cheifetz, R. C. Jared, S. G. Thompson, H. R. Bowman, and J. O. Rasmussen, paper in preparation.

18. J. R. Huizenga and R. Vandenbosch, Phys. Rev. 120, 1305 (1960).

19. R. Vandenbosch and J. R. Huizenga, Phys. Rev. 120, 1313 (1960).

20. I. Bergström, C. J. Herrlander, A. Kerek, and A. Luukko, Nucl. Phys. A123, 99 (1969).

21. A. Luukko, A. Kerek, I. Rezanka, and C. J. Herrlander, Nucl. Phys. A135, 49 (1969).

22. R. A. Warner and J. E. Draper, Phys. Rev. C1, 1069 (1970).

23. G. L. Smith and J. E. Draper, Phys. Rev. C1, 1548 (1970).

24. J. H. Jett and D. A. Lind, Nucl. Phys. A155, 182 (1970).

25. C. M. Lederer, J. M. Jaklevic, and J. M. Hollander, Lawrence Radiation Laboratory Report UCRL-19986, Nov. 1970 (submitted to Nucl. Phys.).

26. W. E. Nervik, Phys. Rev. 119, 1685 (1960).

27. H. R. Bowman, J. C. D. Milton, S. G. Thompson, and W. J. Swiatecki, Phys. Rev. 126, 2120 (1962); Phys. Rev. 129, 2133 (1963).

28. A. G. Blair, J. G. Beery, and E. R. Flynn, Phys. Rev. Letters 22, 470 (1969).

29. R. F. Casten, Ole Hansen, E. R. Flynn, and T. J. Mulligan, Bull. Am. Phys. Soc. 16, 643 (1971).

30. H. Ahrens, H. Folger, N. Trautman, and G. Herrmann, private communication.

31. G. Herrmann, N. Kaffrell, N. Trautmann, R. Denig, W. Herzog, D. Hübscher, and K. L. Kratz, in Proceedings on the International Conference on the Properties of Nuclei Far From the Region of Beta-Stability, Leysin, Switzerland, 1970 (CERN, Geneva, 1970), Vol. 2, p. 985.

32. R. F. Casten, E. R. Flynn, O. Hansen, T. Mulligan, R. K. Sheline, and P. Kienle, Phys. Letters 32B, 45 (1970).

33. A. Bäcklin, B. Fogelberg, and G. Hedin, in Proceedings on the International Conference on the Properties of Nuclei Far From the Region of Beta-Stability, Leysin, Switzerland, 1970 (CERN, Geneva, 1970), Vol. 2, p. 1069.

34. A. Kerek, I. Bergström, S. Borg, P. Carlé, G. Holm, and B. Rydberg, in Proceedings on the International Conference on the Properties of Nuclei Far From the Region of Beta-Stability, Leysin, Switzerland, 1970 (CERN, Geneva, 1970), Vol. 2, p. 1010.

35. E. Monnand, J. Blachot, L. C. Carraz, and A. Moussa, in Proceedings on the International Conference on the Properties of Nuclei Far From the Region of Beta-Stability, Leysin, Switzerland, 1970 (CERN, Geneva, 1970), Vol. 2, p. 1119.

36. T. Alväger, R. A. Naumann, R. F. Petry, G. Sidenius, and T. D. Thomas, Phys. Rev. 176, 1105 (1968).

37. J. T. Larsen, W. L. Talbert, Jr., and J. R. McConnell, Phys. Rev. C3, 1372 (1971).

38. J. B. Wilhelmy, S. G. Thompson, J. O. Rasmussen, J. T. Routti, and J. E. Phillips, Lawrence Radiation Laboratory Report UCRL-19530, 1971, p. 178 (unpublished).

39. J. S. Greenberg, in Proceedings on the International Conference on Radioactivity in Nuclear Spectroscopy, Vanderbilt University, 1969; see also R. G. Stokstad, I. A. Fraser, J. S. Greenberg, S. H. Sie, and D. A. Bromley, Nucl. Phys. A156, 145 (1970).

40. C. M. Lederer, J. M. Hollander, and I. Perlman, Table of Isotopes, 6th edition (John Wiley and Sons, Inc., New York, 1967).

41. J. G. Bjerrgaard, O. Hansen, O. Nathan, and S. Hinds, Nucl. Phys. 86, 145 (1966).

Table 1. Energies and intensities of ground-state band transitions in prompt even-even products of ^{252}Cf spontaneous fission.

Isotope	2 → 0 E (keV)	2 → 0 I (%/f)	4 → 2 E (keV)	4 → 2 I (%/f)	6 → 4 E (keV)	6 → 4 I (%/f)	8 → 6 E (keV)	8 → 6 I (%/f)	K x-ray yield from ground-state band (10^{-4}/f)	$t_{\frac{1}{2}}$ (nsec)	Delay Yield (%/f)	State
^{94}Sr[a]	837.4	0.51	(800)						0.11			
^{96}Sr[a]	815.5	0.34	(800)						0.07			
^{98}Zr[b]	1223	0.3										
^{100}Zr	212.7	1.80	352.1	1.26	497.9	0.57	(640)		13			
^{102}Zr	151.9	1.43	326.6	0.99	486	0.61	(587)	0.17	26			
^{102}Mo[c]	296.0	0.46	447		(562)		(652)		1.3			
^{104}Mo	192.3	3.37	368.7	2.49	520.0	1.03	(606)		33			
^{106}Mo	171.7	3.37	350.8	2.31	(511.8)	0.88	(596)		48			
^{106}Ru[d]	269	0.16	439		(562)		(667)		0.65			
^{108}Ru	242.3	1.94	423	1.0*	(580)		(665)		10.8			
^{110}Ru	240.8	3.49	423	1.9*	576.1	1.19	(708)	0.31	19.9			
^{112}Ru	236.8	0.97	408.9	0.67	(554)		(647)		5.9			
^{112}Pd[e]	348.8	0.77	535.8	0.45	(643.8)	0.26	(810)		1.6			
^{114}Pd	332.9	1.48	520.7	0.87	649.3	0.47	(789)		3.5			
^{116}Pd	340.6	0.87	538.0	0.42	(691)		(814)		1.9			
^{118}Cd[f]	488.0	0.32	677.3	0.29	(771)	0.09	(934)		0.3			
^{120}Cd[f]	505.5	~0.3	(698)		(818)		(961)		0.3			
^{132}Te[g]	974	~0.2	697		103	0.08			4.4	130	0.08	6^+
^{134}Te[h]	1278	1.5	297	1.3	115	1.08			87.3	164	1.08	6^+
^{136}Te	(688) or (1134)	(0.81) or (0.68)										
^{136}Xe[i]	1313	~0.75	381	~0.75	197	~0.68			10.6	3000	0.68	6^+
^{138}Xe	589.5	2.3	482	1.63					2.6			
^{140}Xe	376.8	1.5	457.9	1.29	(536)		(569)		4.2			
^{140}Ba[j]	602.2	0.52							0.65			
^{142}Ba[k]	359.7	2.90	475.7	2.28	632	1.29	(660)		9.7			
^{144}Ba	199.4	3.60	331.0	2.48	431.7	1.57	510.8	0.76	51.4			
^{146}Ba	181.0	1.01	333	0.69	(445)		(569)		18.1			
^{144}Ce[ℓ]	397.5	0.2							0.7			
^{146}Ce	258.6	1.04	410.1	0.81	502.3	0.51	(637)		8.1			

(Continued)

Table 1. (Continued)

Isotope	2 → 0 E (keV)	2 → 0 I (%/f)	4 → 2 E (keV)	4 → 2 I (%/f)	6 → 4 E (keV)	6 → 4 I (%/f)	8 → 6 E (keV)	8 → 6 I (%/f)	K x-ray yield from ground-state band (10^{-4}/f)	$t_{\frac{1}{2}}$ (nsec)	Delay Yield (%/f)	State
^{148}Ce	158.7	2.31	295.7	1.84	386.5	1.20	(484)		60.6	10	0.39	2^+
^{150}Ce	97.1	>0.98	209.0	0.85	300.7	0.65	376.4	0.45	69	18	0.45	2^+
^{150}Nd^m	130.1	0.15	251.4		339.7		(424)		4.3			
^{152}Nd	75.9	>0.6	164.7	0.51	247.3	0.35	322.1	0.30	27.7	82	0.018	6^+
^{154}Nd	72.8	>0.4	162.4	0.39	243.7	0.24	328.1	0.16	23.5	2100	0.08	4^+
^{154}Sm^n	82.0	0.04	185	0.034	282							
^{156}Sm^o	76	>0.1	174.2	0.10	258	~0.07	(352)			185	0.03	6^+
^{158}Sm	72.8	>0.15	167.5	0.14	258.2	0.10	346	0.07		77	0.03	4^+

*The 4 → 2 transitions in ^{108}Ru and ^{110}Ru were too close in energy to be separated; thus their intensities were assigned to the isotopes according to the ratio of the $2^+ \rightarrow 0^+$ intensities.

[a]The $2^+ \rightarrow 0^+$ transitions in ^{94}Sr and ^{96}Sr have been assigned by R. Foucher et al.[5] using an on-line mass separator.

[b]The first 2^+ in ^{98}Zr was found by Blair et al.[28] using ^{96}Zr(t,p)^{98}Zr reaction.

[c]The 2^+ and 4^+ excited states of ^{102}Mo have also been seen by Casten et al.[29] and also by Herrmann et al.[30]

[d]The 2^+ and 4^+ states of ^{106}Ru have been identified in the radiochemical work of Herrmann et al.[31] and by Casten et al.[32] using ^{104}Ru(t,p)^{106}Ru.

[e]The 2^+ and 4^+ states of ^{112}Pd have also been observed by Casten et al.[29] using the ^{110}Pd(t,p)^{112}Pd reaction.

[f]The states in ^{118}Cd and ^{120}Cd have been identified also by Bäcklin et al.[33] using an on-line mass separator.

[g]The 2^+, 4^+ and 6^+ states in ^{132}Te have been identified by A. Kerek et al.[34] using an on-line mass separator.

[h]The 2^+, 4^+ and 6^+ levels of ^{134}Te and the isomeric $6^+ \rightarrow 4^+$ transition have been identified by John et al.[11] who studies delayed gamma rays from ^{252}Cf fission fragments. These states have also been identified by Bergström et al.[20] using an on-line mass separator.

[i]The 2^+, 4^+ and 6^+ states in ^{136}Xe have been identified by W. John et al.[11] who observed the 3 μsec decay of the isomeric 6^+ state in the spontaneous fission of ^{252}Cf. The states were also identified by Monnand et al.[35] using radiochemical techniques.

[j]The $2^+ \rightarrow 0^+$ transitions in ^{140}Ba have been observed by Alväger et al.[36] using mass separation techniques.

[k]The 2^+ and 4^+ states have been identified by Alväger et al.[36] and Larsen et al.[37] using on-line mass separators.

[ℓ]The $2^+ \rightarrow 0^+$ transition in ^{144}Ce has been observed by Wilhelmy et al.[38] following beta decay of unseparated fission fragments.

[m]The energies of the ground-state band in ^{150}Nd have been taken from Greenberg et al.[39]

[n]The ground-state band of ^{154}Sm which is a stable isotope has been taken from the Table of Isotopes.[40]

[o]The 2^+, 4^+ and 6^+ states of ^{156}Sm were found also in the ^{154}Sm(t,p)^{156}Sm reaction by Bjerrgaard et al.[41]

Table 2. Z_p values of specific mass chains.

A	Z_p	σ	Yield[a] %/fiss	Z_p Watson *et al.*[b]	Z_p Reisdorf *et al.*[c]
102	40.72 ± 0.06	0.631 ± 0.064	4.25	40.6 ± 0.3	40.7
106	42.24 ± 0.31	0.646 ± 0.015	6.20	42.5 ± 0.1	42.3
112	44.91 ± 0.11	0.829 ± 0.253	3.65	45.4 ± 0.2	45.1
136	53.00 ± 0.06	0.531 ± 0.044	4.40		53.4
140	54.84 ± 0.04	0.477 ± 0.028	6.32	54.4 ± 0.2	54.7
144	56.27 ± 0.09	0.666 ± 0.052	5.77	56.3 ± 0.1	56.3
146	57.01 ± 0.03	0.609 ± 0.039	5.15	57.2 ± 0.1	57.1
154	60.66 ± 0.06	0.473 ± 0.036	1.11		60.6

[a]Ref. 26.

[b]Ref. 8.

[c]Ref. 10.

Table 3. A_p values derived from even-Z elements.

Z	Points	A_p	σ_A	%/fission	Watson et al.[a] A_p	Reisdorf et al.[b] A_p	Reisdorf et al.[b] Yield	$\bar{\nu}_{total}$ From A_p	$\bar{\nu}_{total}$ exp.[c]
38	2	94.60 ± 0.24	(1.376)	1.97 ± 0.27		95.5	2.9 ± 0.1		
40	3	100.77 ± 0.12	1.376 ± 0.100	7.38 ± 0.52	100.6 ± 0.4	100.6	7.9 ± 0.3		
42	3	105.00 ± 0.16	1.387 ± 0.106	15.36 ± 1.13	104.8 ± 0.3	105.2	15.4 ± 0.3		
44	4	109.77 ± 0.09	1.487 ± 0.066	11.86 ± 0.85	111.0 ± 0.4	109.6	13.6 ± 0.2		
46	3	114.10 ± 0.21	1.814 ± 0.250	6.83 ± 0.73	114.0 ± 0.5	113.8	7.8 ± 0.3		
48	2	118.89 ± 0.43	(1.814)	1.66 ± 0.21					
52	3	134.50 ± 0.11	1.180 ± 0.074	4.96 ± 0.32		133.9	7.8 ± 0.3	3.40 ± 0.24	4.2
54	3	138.45 ± 0.13	1.581 ± 0.152	9.63 ± 0.70	139.4 ± 0.3	138.5	13.6 ± 0.2	3.78 ± 0.16	3.9
56	4	143.29 ± 0.08	1.610 ± 0.068	16.23 ± 1.08	143.2 ± 0.1	143.3	15.4 ± 0.3	3.71 ± 0.17	3.5
58	4	147.95 ± 0.14	1.763 ± 0.109	9.20 ± 0.68	148.0 ± 0.1	147.9	7.9 ± 0.3	3.28 ± 0.17	3.5
60	3	152.55 ± 0.19	1.466 ± 0.175	2.40 ± 0.26	152.5 ± 0.3	152.5	2.9 ± 0.1	4.85 ± 0.31	4.1
62	3	158.59 ± 2.92	2.783 ± 1.269	1.08 ± 0.99	155.0 ± 0.5	156.9	1.13 ± 0.06		

[a] Ref. 8.

[b] Ref. 10.

[c] Ref. 27.

Table 4. Gaussian fitting of known independent yields of rubidium and cesium products in thermal-neutron fission of ^{235}U.

Element	Fit	Points	A_p	ΔA_p	σ_A	$\Delta\sigma_A$	Y	ΔY
	All known cases	11	92.525 ± 0.0037		1.290 ± 0.0037		11.48 ± 0.22	
Rb	Mass separated cases	9	92.279 ± 0.017		1.457 ± 0.015		11.96 ± 0.22	
	Isotopes 93,95,97	3	92.28 ± 0.11		1.45 ± 0.12		12.75 ± 0.89	
	All known cases	10	140.99 ± 0.031		1.364 ± 0.007		11.26 ± 0.38	
Cs	Mass separated cases	7	141.07 ± 0.041		1.417 ± 0.027		10.97 ± 0.43	
	Isotopes 139,141,143	3	140.95 ± 0.11		1.61 ± 0.15		13.03 ± 0.86	

Table 5. K x-ray yields in units of 10^{-4}/fission.

Isotope	From ground-state bands of even-even[a]	Total elemental K x-ray yield Watson *et al.*[b]	Reisdorf *et al.*[c]
$_{38}Sr$	0.18	33.9	10.9
$_{40}Zr$	40	128	60.8
$_{42}Mo$	82	278	152
$_{44}Ru$	37	377	117
$_{46}Pd$	7	150	52
$_{48}Cd$	0.6		11
$_{52}Te$	92	33.4	18.7
$_{54}Xe$	17.4	153	77
$_{56}Ba$	80	445	227
$_{58}Ce$	139	460	225
$_{60}Nd$	56	283	255
$_{62}Sm$		74.7	

[a]Detection time: 0 - 3 μsec.

[b]Detection time: 0 - 100 nsec. Ref. 8.

[c]Detection time: 0 - 1 nsec. Ref. 10.

Table 6. Relative yield of even ruthenium isotopes correlated with different intervals of the fragment total kinetic energy in the spontaneous fission of ^{252}Cf. The total fragment yield in the three kinetic energy intervals was normalized to unity.

	Total Kinetic Energy Intervals in MeV		
Isotope	150 - 179	180 - 190	191 - 210
^{108}Ru	0.221	0.427	0.352
^{110}Ru	0.091	0.309	0.600
^{112}Ru	0.015	0.230	0.755

FIGURE CAPTIONS

Fig. 1. General schematic representation of the experimental detector configuration. Detectors F1 (with electrodeposited ^{252}Cf) and F2 measured kinetic energies of the fragments. Detectors γ_1 and γ_2 measured energies of γ-rays and/or x-rays. Four parameter coincidence studies (F1, F2, γ_1, γ_2) were used to establish transitions associated with ground state bands in even-even nuclei. Once these transitions were established they were studied quantitatively (as reported in this paper) in a three parameter experiment (F1, F2, γ_2) which afforded a higher efficiency of detection. The sources and detectors indicated in the bottom of the figure were used for external stabilization of the photon detectors.

Fig. 2. A schematic representation of the ground state band de-excitation of a prompt even-even fission product. The numbers associated with each transition are average relative intensities observed in fission for the decay from the indicated spin members of the ground state band.

Fig. 3. A plot of the calculated percentage of decays of the prompt even-even fission products which do not cascade through the $2^+ \rightarrow 0^+$ ground state transition as a function of a parameter B [$\sim$ rms (J+1/2)] which is related to the average primary angular momentum of the fission fragment.

Fig. 4. A plot of ΔZ vs. the charge of the fission product. The relationship for ΔZ is given on the ordinate where Z represents the element number of the fission product formed, ρ_F is the charge to mass ratio of ^{252}Cf (98/252), and A_p is the preneutron emission centroid for the mass distribution of the element. The differences between the ΔZ values of complimentary light and heavy fragment are indicative of the uncertainties in the presented results (see text). The solid line represents the results of Watson, et al.[8]

Fig. 5. The dependence of the yield of pairs of complimentary fission products as a function of the total kinetic energy release. The pairs are ^{144}Ba - ^{104}Mo (represented by dots) and ^{144}Ba - ^{106}Mo (represented by open circles). The pairs were measured by observing coincidences of the specific gamma rays.

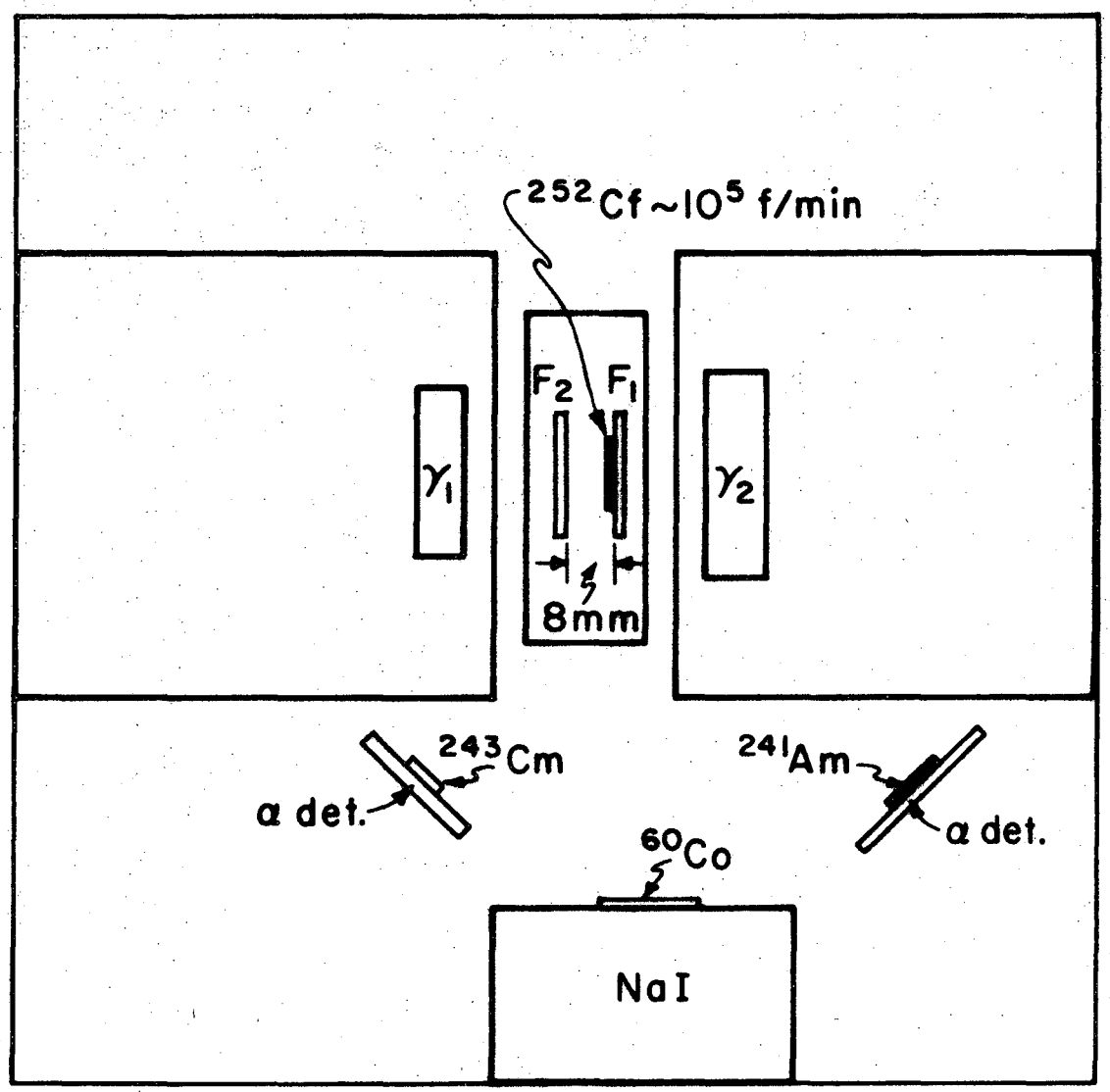

XBL703-2403

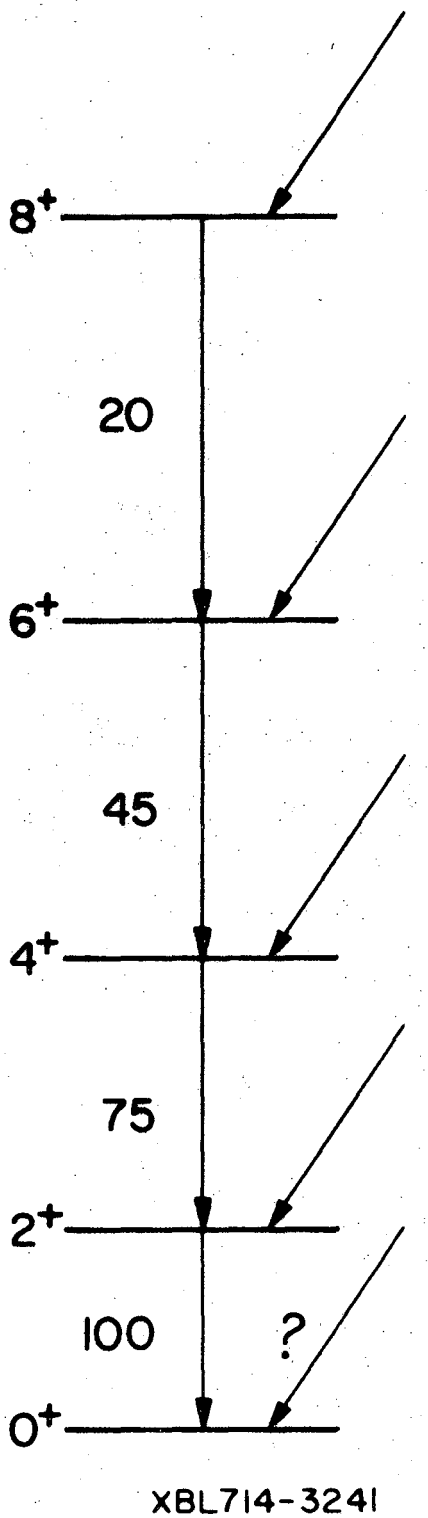

Fig. 2

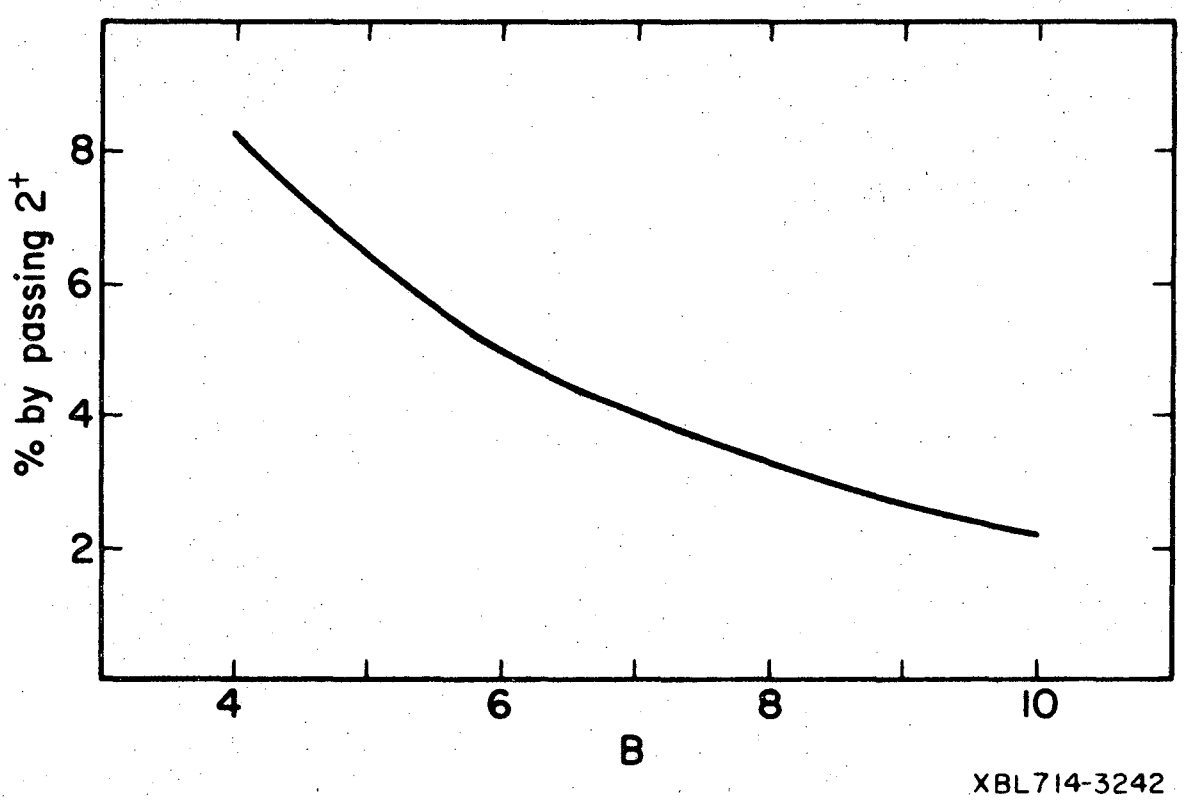

Fig. 3

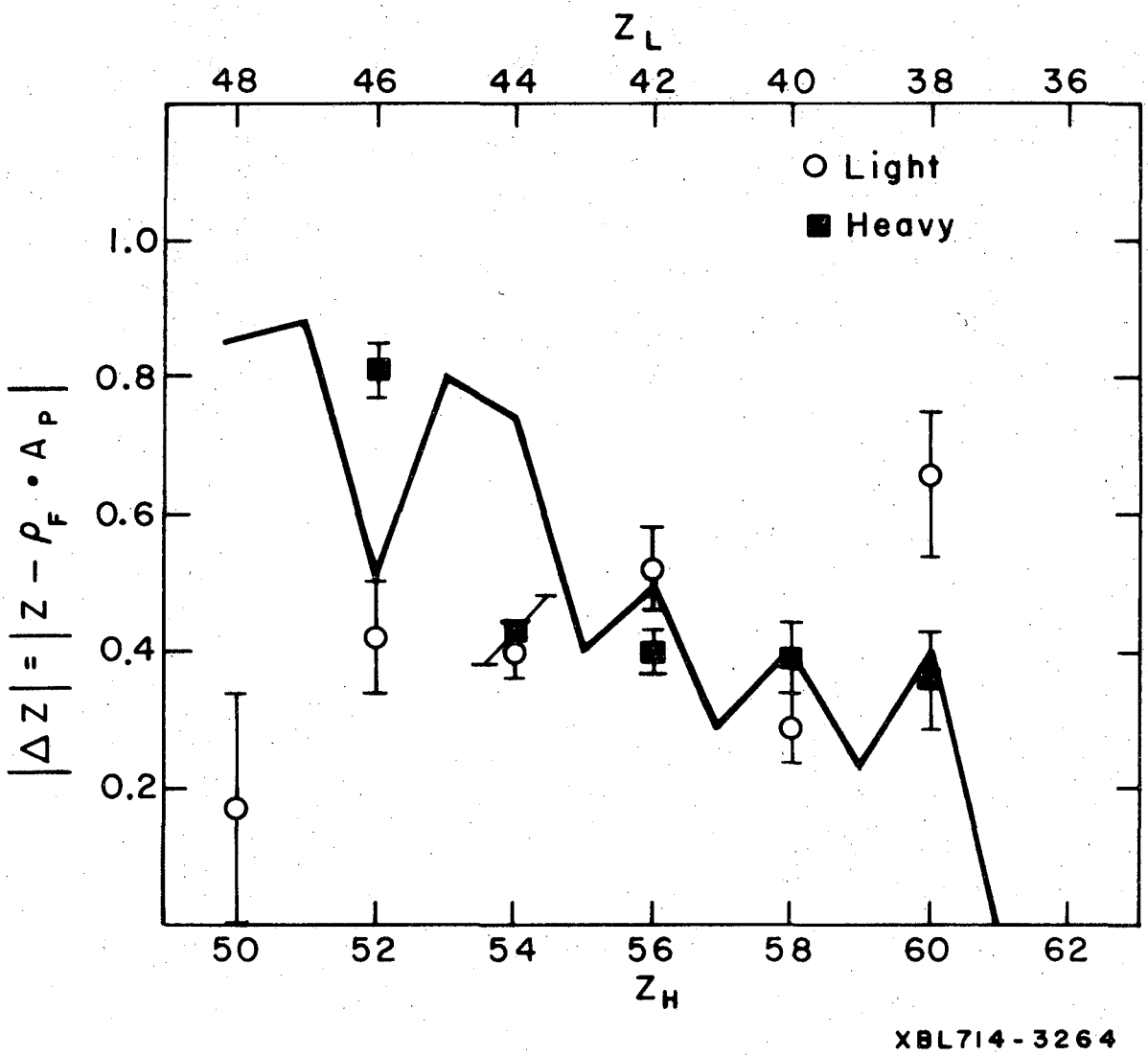
Z_L
48
46
44
42
40
38
36
Light
Heavy
1.0
0.8
0.6
0.4
0.2
$|\Delta Z| = |Z - \rho_F \cdot A_P|$
50
52
54
56
58
60
62
Z_H
XBL714-3264

Fig. 4

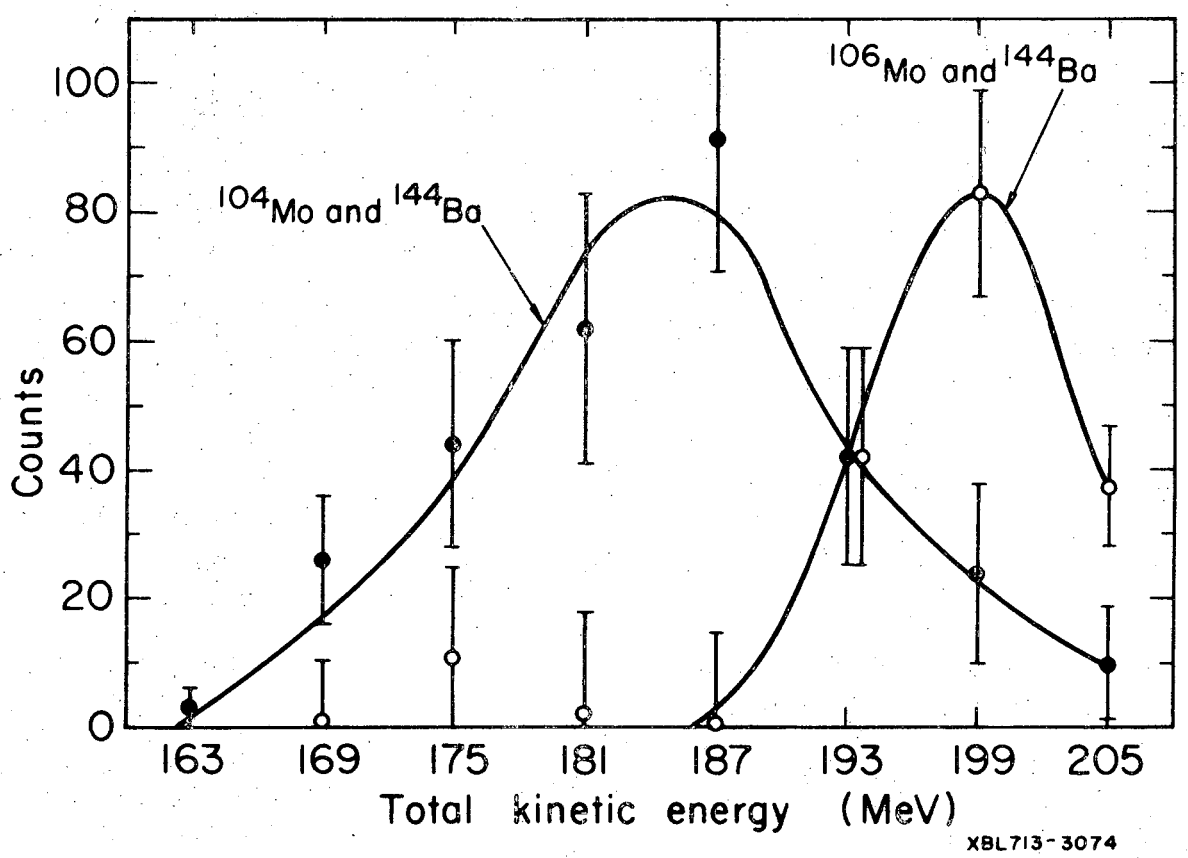
100
80
60
40
20
0
Counts
^{104}Mo and ^{144}Ba
^{106}Mo and ^{144}Ba
163
169
175
181
187
193
199
205
Total kinetic energy (MeV)
XBL713-3074

Fig. 5

LEGAL NOTICE

This report was prepared as an account of work sponsored by the United States Government. Neither the United States nor the United States Atomic Energy Commission, nor any of their employees, nor any of their contractors, subcontractors, or their employees, makes any warranty, express or implied, or assumes any legal liability or responsibility for the accuracy, completeness or usefulness of any information, apparatus, product or process disclosed, or represents that its use would not infringe privately owned rights.

TECHNICAL INFORMATION DIVISION
LAWRENCE RADIATION LABORATORY
UNIVERSITY OF CALIFORNIA
BERKELEY, CALIFORNIA 94720