UCRL-2054

UNIVERSITY OF CALIFORNIA — BERKELEY

TWO-WEEK LOAN COPY

This is a Library Circulating Copy which may be borrowed for two weeks. For a personal retention copy, call Tech. Info. Division, Ext. 5545

RADIATION LABORATORY

UCRL-2054 c.2

DISCLAIMER

This document was prepared as an account of work sponsored by the United States Government. While this document is believed to contain correct information, neither the United States Government nor any agency thereof, nor the Regents of the University of California, nor any of their employees, makes any warranty, express or implied, or assumes any legal responsibility for the accuracy, completeness, or usefulness of any information, apparatus, product, or process disclosed, or represents that its use would not infringe privately owned rights. Reference herein to any specific commercial product, process, or service by its trade name, trademark, manufacturer, or otherwise, does not necessarily constitute or imply its endorsement, recommendation, or favoring by the United States Government or any agency thereof, or the Regents of the University of California. The views and opinions of authors expressed herein do not necessarily state or reflect those of the United States Government or any agency thereof or the Regents of the University of California.

UCRL-2054
Unclassified-Physics Distribution

UNIVERSITY OF CALIFORNIA

Radiation Laboratory

Contract No. W-7405-eng-48

PHYSICS DIVISION QUARTERLY REPORT

August, September, and October, 1952

December 16, 1952

Some of the results reported in this document may be of a preliminary or incomplete nature. It is the request of the Radiation Laboratory that the document not be circulated off the project nor the results quoted without permission.

Berkeley, California

TABLE OF CONTENTS

I GENERAL PHYSICS RESEARCH 3

1. Cloud Chamber Program 3
2. Film Program 3
3. Proton-Proton Scattering at Reduced Energies (160 and 250 Mev) 4
4. Total Proton-Proton Scattering Cross Section (345 Mev) 5
5. Elastic Proton-Deuteron Scattering (Using 345 Mev Protons) 5
6. Fission of Uranium Upon Capture of μ^- or π^- Mesons 6
7. Search for Possible Naturally Occurring Technetium 8
8. Charged Mesons Produced by High Energy Neutron Bombardment 8
9. The Availability of the Pi-Minus Meson Beam at the Cyclotron 9
10. Internal Momentum Distribution 10
11. The Photoproduction of Negative Pions from Deuterium 10
12. The Radiofrequency Fine Structure of the Photon Beam from the Berkeley Synchrotron 11
13. The Triton Reaction ($p + d \rightarrow t + \pi^+$) 12
14. Status of the 22-inch Spiral Orbit Spectrometer 12
15. Total Cross Section for Positive Pions in Hydrogen 13
16. Total Cross Sections for Positive Pions in Light Nuclei 14
17. π^+ Production as a Function of Atomic Number 14
18. Excitation Function for $p + p \rightarrow \pi^+ + d$ 14
19. Production of Changed Pions by Protons on Carbon at 180° to the Beam 14
20. Low Energy Pion-Nucleon Interaction 15
21. Photographic Pulse Heigh Analysis Method 15
22. Investigation of Electric Excitation of Heavy Nuclei 15
23. Charged Particles from Heavy Elements 16
24. Investigation of Short Radioactivities 16
25. Synchrotron Studies 17
26. Theoretical Studies 18

II ACCELERATOR OPERATION AND DEVELOPMENT 21

1. 184-inch Cyclotron Operation 21
2. 60-inch Cyclotron Operation and Development 21
3. Synchrotron Operation 32
4. Linear Accelerator and Van de Graaff Operation 32
5. Bevatron Development and Construction 33

*Previous Physics Quarterly Report (UCRL-1948)
May, June, and July, 1952

I GENERAL PHYSICS RESEARCH

1. Cloud Chamber Program

Wilson M. Powell

The Production of Positive and Negative π Mesons by Neutrons in Oxygen.
F. C. Ford

Work is in progress to determine the angle and energy distributions of π mesons produced in collisions of neutrons with oxygen. The high energy neutrons were produced in a LiD target placed in the 340 Mev proton beam of the 184-inch cyclotron. The collimated neutron beam was passed through a 22 inch cloud chamber filled with oxygen gas and operated horizontally in a pulsed magnetic field of 22,000 gauss.

Preliminary results indicate the cross section for meson production is of the order of a few millibarns. The angular distribution in a special cm system is of the type $A + B \cos^2 \theta$, where A is approximately equal to B. The meson energy spectrum is peaked near 30 Mev in the laboratory frame.

Approximately 1600 useable stereoscopic photographs were taken. These photographs are being examined in a projector which permits 3 dimensional reconstruction of events. Three-fourths of the photographs have already been examined in some detail. It appears that a total of 380 to 400 negative π events and a total of 20 to 25 positive π events will be obtained.

Many high energy deuterons are observed in the forward direction which may be a feature of the production process. The associated particles in each reaction are being examined and identified where possible.

2. Film Program

Walter H. Barkas

Study of B^8 and Li^8 Tracks Produced in High Energy Disintegration Experiments.
W. H. Barkas and F. Gilbert

By using radius of curvature and range for the analysis of nuclear fragments produced in high energy disintegrations, many light nuclei can be identified and isolated for study. The hammer tracks of B^8 and Li^8 have been separated out for particular study. It is found that the alpha particle range distribution from Be^8 arising from the decay of B^8 apparently is identical to that arising from the decay of Li^8. These isotopes have also been employed to measure the range correction caused by electron pickup.

Physical Analysis of Disintegration Products. Robert Deutsch and W. H. Barkas

A rather large program of analysis of nuclear track plates previously exposed has been carried on. The disintegration products from proton and alpha particle bombardment of Be, Al, Ni, Ag, Au and U are being tabulated.

A Test of the Charge Symmetry Hypothesis. Henry Wilson and W. H. Barkas

Bombarding carbon with alpha particles, the plus/minus production ratio of ~15 Mev mesons was measured. It was found to be 0.72 ± 0.17. Allowing for the depression of the ratio by the coulomb field of the nucleus, this result provides support for the charge symmetry hypothesis.

The Beta Ray Spectrum of N^{12}. J. Vedder and R. Sagane

The spiral orbit spectrometer has been adapted to measure the beta ray spectrum of N^{12}. A measurement has been finished in air. Apparatus has now been completed for measuring the spectrum in vacuum between 1 and 17 Mev, using an assembly of three G.M. counters together with an appropriate slit system.

Meson Spectra. Edward Gross and R. Sagane

Using the 20-inch spiral orbit spectrometer for momentum analysis, it is planned to measure meson production spectra. Neher circuits for counting π^+ mesons using $\pi - (\pi-\mu)$ coincidences have nearly been finished. In order to reduce the minimum meson energy for counting, several proportional counters are being made.

Meson Spectrometer Magnets. R. Sagane

The 20-inch magnet was assembled in September and some tests were made. Two short circuits between the coil and the cooling disks were found. To correct this, the present insulator is being replaced by hardened silicone glass fibre disks.

In the meantime, the vacuum chamber has been tested and machining defects corrected. The new method of vacuum packing adopted in the vacuum chamber design was found satisfactory.

Most of the design drawings of the 40-inch magnet have been made, and most of the construction materials are now on hand. Fabrication will commence when the drawings have had a final check.

3. Proton-Proton Scattering at Reduced Energies (160 and 250 Mev)

John D. Garrison

Magnetic analysis of the beam after energy attenuation has been of considerable help in obtaining a more monochromatic beam of better-known energy. In this arrangement the 345 Mev proton beam emerges in the cave where it passes through a suitable beryllium absorber. Following the beryllium absorber the beam passes through collimators, a magnetic field of about 11,000 and 14,000 gauss for 160 and 250 Mev, respectively (which bends the trajectory about 28°) and a last Fixso collimator.

The beam emerging from the last collimator appears quite monoenergetic in the analysis of a Bragg curve. Study of a Bragg curve does not determine the number of low energy protons with great precision. However, the Bragg curve indicates that the energy homogeneity is very much better than

that of other reduced energy beams we have used, and certainly indicates that less than five percent of the protons can have a significantly lower energy than the protons desired. Approximate analysis of the scattering from the collimator slits indicates that the beam is very probably purer than the five percent figure would indicate. The beam current before energy attenuation is approximately 10^{-10} amperes, while that obtainable after the magnetic energy analysis is about 5×10^{-13} and 1×10^{-13} amperes.

The present scattering measurements are not fully complete, and some recalibration of the ionization chambers using the faraday cup is essential before final absolute cross sections can be given. Results thus far down to 11° degrees, c.m. system, seem to agree quite well with those measurements made here in earlier years and still seem to be in disagreement with those at locations (Harwell, and Rochester).

4. Total Proton-Proton Scattering Cross Section (345 Mev)

O. Chamberlain, E. Segrè, and C. Wiegand

The large liquid hydrogen target has been completed and tested. (The hydrogen container is a cylinder eight inches in diameter and 20 inches long. The beam will pass along the axis of the cylinder.)

The electronic arrangements for a first run on this problem are well advanced, and a run is anticipated during the coming month.

The method involves counting the protons as they enter the target through a scintillation counter and counting them with a large scintillation counter as they leave the target, provided they are not scattered by more than eight degrees. A proton scattered by more than eight degrees will fail to appear in the last counter. It is an event of this last variety that we wish to count. This means that our counting scheme is in effect an anticoincidence arrangement, although no anticoincidence circuits are actually used.

As a check on the electronic counting arrangements the pulses from part of the run are to be photographed on moving film. It is hoped that an analysis of this film may show (by study of pulse heights) whether or not any low energy protons are arriving at the target and whether or not protons are arriving in pairs to a significant extent. Also the pulse height distributions may help to decide whether or not the last counter is detecting all the particles it is expected to detect and whether or not the electronics is behaving as it should, that is, giving results in agreement with those shown by the film.

5. Elastic Proton-Deuteron Scattering (Using 345 Mev Protons)

D. D. Clark and O. Chamberlain

The principal experimental problem in this experiment has been the separation of elastic events from those in which the deuteron in the target is broken up and two protons emerge. Analysis of the kinematics of both processes and of previous runs show that a method which can identify the scattered particle as a proton or a deuteron is necessary. The method chosen is that of measuring the specific ionization and the total energy by pulse heights produced in a thin and a thick counter respectively.

For detection of the low energy deuterons it had been hoped that a proportional counter and a liquid scintillation counter would be suitable; this arrangement, however, will have to be modified because of the large fluctuations in energy loss as the deuterons pass through the 2 cm. thick proportional counter that was to be used. These fluctuations can be calculated from work by Landau and also by Symon; they have also been measured here recently by Igo, Clark, and Eisberg for 32 Mev protons in 2 cm. of argon and found to agree reasonably with the predicted values.

For the detection of the higher energy deuterons two liquid scintillators of about 1.8 and 13.9 gm/cm^2 copper equivalent have been employed. The apparatus has been tested at the cyclotron by observing particles scattered at a small angle to the beam by a carbon target. Separate observations were made with a beam of protons and with one of deuterons. Protons and deuterons appear to be separated reasonably well. Figure 1 shows two frequency distributions for masses observed at 24° (lab angle) to the beam. Only a fraction of the test data is included. The distributions were obtained by plotting on a graph of dE/dx vs. E a point for each particle observed, drawing by eye "equi-mass" lines, and then reading from this plot the mass spectrum. This analysis is rough but indicates the efficacy of the instrumentation.

On the basis of this separation of protons from deuterons it is hoped that this work will go ahead reasonably rapidly. The technique is also being studied in connection with some other problems to which it may be applied.

6. Fission of Uranium Upon Capture of μ^- or π^- Mesons

Walter John

At the suggestion of Prof. Segrè, Dr. W. F. Fry exposed uranium-loaded C-2 emulsions to the π^- meson beam at the University of Chicago. These plates were scanned by Walter John. Assuming that essentially all of the π^- mesons entering uranium nuclei cause fission, one can calculate the Z-dependence of the capture of a π^- meson into an orbit about a nucleus from the observed percent of meson endings which are fission events. Preliminary results of the scanning show that out of 3762 π^- endings, 25 were fission events. This is compatible with a capture probability proportional to Z.

The experiment was repeated using μ^- mesons from the Chicago cyclotron. Out of 1502 μ^- endings, 5 fissions were observed. From the observed prong distribution of the endings, the π^- meson contamination has been found to be negligible. Thus μ^- mesons apparently leave enough energy in the compound nucleus to cause fission.

The above data are subject to change after a detailed examination of the fission events has been made. The scanning is being continued; additional data may make it possible to estimate the fraction of μ^- mesons which cause fission when captured by uranium by comparison to the π^- data.

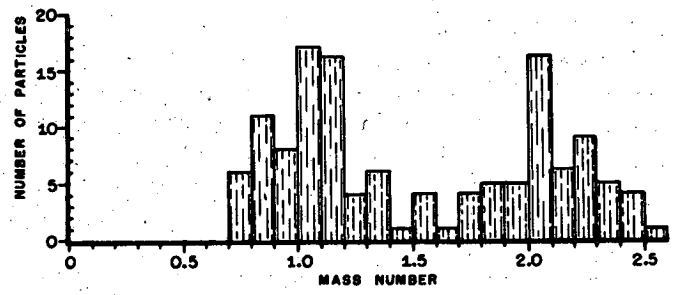

DEUTERON BEAM ON CARBON AT 24°

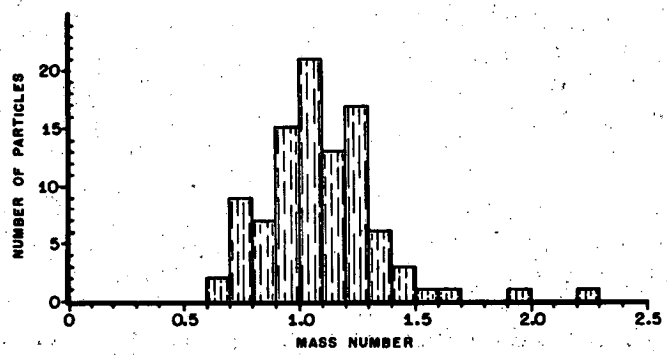

PROTON BEAM ON CARBON AT 24°

MU-4756

Fig. 1

7. Search for Possible Naturally Occurring Technetium

T. J. Ypsilantis

This research is concerned with the probability of finding some long life isotopes of Tc (98 or 97) in naturally occurring ores.

The ores studied are molybdenite with a relatively large Re content. The processing at the will is such that one can predict reasonably the course of Tc in the refining process and be confident that we look at the proper fractions or residues.

The work up to now has been mainly concerned with checking the Tc behaviour with radioactive tracers in some of the refining procedures used at the mills and in determining the limit of sensitivity of the optical spectroscopic method that we plan to use for the revelation of Tc in the Re concentrates.

We are now in the position to start work on pounds of residues or concentrates.

8. Charged Mesons Produced by High Energy Neutron Bombardment

L. Neher, D. Dixon, and B. J. Moyer

An experimental survey of the charged mesons produced by the 290 Mev neutron beam on beryllium (Be) and carbon (C) has been recently completed. Meson detection and identification were made by simultaneous measurement of the momentum, velocity, and range of the meson in carbon. The ratio of negative to positive pi mesons with kinetic energy of 70 ± 25 Mev was measured at 15 ± 5 degree intervals for laboratory angles (θ), ranging from 15 to 125 degrees. The ratio data was fitted by a linear function of the angle, using the method of least squares.

(1) Be target, $\frac{\pi^-}{\pi^+} = (36 \pm 7) - (0.13 \pm 0.08)\ \theta$

(2) Carbon target, $\frac{\pi^-}{\pi^+} = (27 \pm 4) - (0.18 \pm 0.03)\ \theta$

Some computed ratios and their probable errors are:

θ^o	π^-/π^+ C	π^-/π^+ Be
0	27 ± 4	36 ± 7
45	19 ± 2	30 ± 5
90	11 ± 1	24 ± 4
135	3 ± 2	18 ± 6

The ratio for carbon at 90° compares favorably with Bradner's (Bradner, Rankin, and O'Connell, Phys. Rev. 79, 720, 1950) result of $\pi^-/\pi^+ = 12.6 \pm 1.5$ for mesons of 50-65 Mev energy range. Bradner's work seems to be the only earlier measurement of this type for neutron bombardment.

In addition to the ratio data, the relative angular distribution for the mesons was obtained. If we assume that a carbon nucleus is equivalent to three alpha particles and a beryllium nucleus is equivalent to two alpha particles plus a loosely bound neutron, then a subtraction of the negative mesons from C from the negative mesons from Be should represent a contribution proportional to the neutron-neutron interaction. Our data give a considerable contribution for this subtraction. The interpretation of the negative meson angular distribution in a center of mass system of the two interacting nucleons is complicated by the momentum distribution of the target neutron. The problem is interesting because it may allow a comparison of the neutron-neutron interaction with the more well known proton-proton interaction for meson production. The analysis of the problem is being continued.

9. The Availability of the Pi-Minus Meson Beam at the Cyclotron

Burton J. Moyer, Wilson J. Frank, and Richard Madey

Several months ago Barkas and Rankin made calculations of orbits for the emergence of pi-minus mesons from a target placed in the circulating beam of the 184-inch cyclotron. Following their calculations a thin window was placed in the cyclotron tank wall at an approximate position for the transmission of mesons over a broad energy range originating at a target mounted on an off-set arm from the main probe.

Barkas, et al, verified the existence of the pi-minus flux by use of photographic emulsion located in proper positions on the cyclotron platform. The purpose of this present report is to describe features of the pi-minus beam which have been observed by scintillation counter telescope techniques. The present experience also indicates the feasibility of working with scintillation counters in the relatively high intensity radiation field present on the cyclotron platform inside the concrete shielding.

Stilbene crystals with photomultipliers in quadruple coincidence, using resolution time of 3×10^{-9} seconds were employed to form the telescope with which the beam was detected and measured. The telescope was located along the calculated orbit for 70 Mev pi-mesons emerging from the target at about 15 degrees inward from the direction of the incident proton beam. External to the cyclotron tank a channel was defined with lead bricks in such a way as to select this orbit. Identification of the quadruple coincidences as meson counts was made by the following typical tests:

1. The range measurement was appropriate to pi-minus mesons of the proper energy.

2. The last two crystals of the telescope were moved back along the orbit seven feet from the first two crystals and a time-of-flight determination was made upon the particles giving the coincidences. The time-of-flight was appropriate to 70 Mev pi-mesons and certainly not appropriate to protons which could traverse a corresponding orbit.

3. When the last two crystals in the time-of-flight position were lifted out of the plane, the counts sharply decreased. Similarly, when they were moved from side to side out of the region of the calculated orbit the counts likewise decreased satisfactorily.

Considerations of the energy spread of the mesons detected based upon a differentiation of the range cut-off curve, together with the area presented by the telescope to the meson flux indicates that the flux density used in the measurements was about 0.2 per square centimeter per second per Mev. It seems very reasonable by the use of a thicker target and by raising the beam to its maximum value to obtain a flux density of one meson per square centimeter per second per Mev in feasible working areas on the platform.

With quadruple coincidence employing resolution times such as those used here, there was very little difficulty with background and it would appear that with an amount of shielding, quite reasonable to handle manually, it will be possible to do meson scattering in experiments.

10. Internal Momentum Distribution

W. N. Hess and John Wilcox

Preparations have continued for replacing the 35 geiger tubes in the proton energy spectrometer with scintillation crystals. Thrity-five anthracene crystals 1/2 in. x 3/4 in. x 1 3/4 in. have been cut with the wire saw. A base for the photo tubes and an improved mounting for the scintillation telescope are being constructed. Preliminary tests with the scintillation counters indicate that it will be possible to count high energy protons without counting gamma rays and very low energy particles, by properly adjusting the photo tube voltage. This should aid considerably in cutting down the accidental channel counts, which have been the limiting factor in previous runs.

11. The Photoproduction of Negative Pions from Deuterium

Richard Madey, Kenneth C. Bandtel, and Wilson J. Frank

The photon beam intensity from the synchrotron has been gradually increased until now it is a factor of 50 to 100 times stronger than it was in July, 1951, when this experiment was first started here. The experimental arrangement for the detection of negative pion-proton coincidences from the reaction $\gamma + n \longrightarrow \pi^- + p$ was designed to take advantage of the maximum available beam intensity. The distance of the proton counter from the target was chosen to give the maximum spatial separation of protons and $\beta \approx 1$ background electrons that come from the target. Such a separation in space occurs because the photon beam was found previously (see next article) to be emitted in short bursts with the 2.1×10^{-8} second period of the radio frequency oscillator. Since most of the electrons that contribute to the background will move with nearly the speed of light, the electrons will arrive at the proton counter in bunches with the same 2.1×10^{-8} second period as the photon beam. Thus, the maximum spatial separation of protons and background electrons that come from the target to the proton counter occurs when the difference in time of flight between protons and electrons is equal to one-half of the rf period of the photon bunches. For this condition, the distance r_p of the proton counter from the target is given by:

$$r_p(\psi, k) = \frac{1/2\ T\ rf}{\frac{1}{\beta_p c} - \frac{1}{\beta_e c}} = \frac{10.5 \times 10^{-9}\ \text{sec}}{\left(\frac{1}{\beta_p c} - 3.33 \times 10^{-11}\right) \frac{\text{sec}}{\text{cm}}}$$

This distance is a function of the proton production angle ψ and the incident photon energy k since the proton velocity $v_p = \beta_p c$ is a function of these two variables.

A measurement of the angular distribution of the negative pions in this reaction by the coincidence detection of negative pions and protons is restricted to backward pion angles in the center-of-mass coordinate system because of the proton production energies which become too low for efficient detection with the present apparatus when the pions are emitted in the forward direction. In order to include the widest range of angles possible with the present apparatus, calculations of the experimental arrangement were made for photons in an energy band around 280 Mev. In addition, only a single counter, instead of a telescope of two counters as in the pion detector, was used for the proton detector.

The two pion counters and the proton counter were connected in triple coincidence with a resolution time and a dead time of 3×10^{-9} seconds. For 280 Mev photons, with a laboratory proton angle of 26.5 degrees and a correlated laboratory pion angle of 103 degrees, the optimum distance of the proton counter from the target turns out to be 55 inches. Under these conditions the pion pulses were delayed by about four times the resolution time of the coincidence circuit. The 1.50 cm. water and heavy water targets that have been used in previous runs were found to be too thick for this new experimental arrangement. The reason is that the time of flight dispersion of protons produced by 280 Mev photons in different parts of the target is larger than the improved resolution function of the coincidence circuit. When a thinner (0.67 gm/cm^2) CD_2 target and its carbon equivalent were used, the ratio of the yield from CD_2 to that from C was found to be several times higher than any previously obtained ratio of the yield from D_2O to that from H_2O. Previously, the ratio of the counting rates from D_2O and H_2O targets was around two or three to one. During the last run, the ratio of counting rates from CD_2 and C targets was around fifteen or twenty to one.

Trouble with so-called "feed-through" pulses from the pion telescope was encountered during the last run. That is, when the photomultiplier high voltage was turned off the proton counter, the pion telescope would sometimes deliver or "feed-through" a coincidence pulse. The discriminator bias could be adjusted to bias out all such "feed-through" counts, but then only a relatively small bias range remained for the efficient detection of coincidences. The "feed-through" free operating bias was only a factor of two or three above the pion telescope "feed-through" bias. This condition in itself would be satisfactory; however, the fact that the "feed-through" bias appears to drift from one day to the next renders the situation unsatisfactory.

12. The Radiofrequency Fine Structure of the Photon Beam from the Berkeley Synchrotron

Richard Madey, Kenneth C. Bandtel, and Wilson J. Frank

The full energy spread out bremsstrahlung beam of the Berkeley synchrotron was shown to be emitted in sharp bursts with the 47.7 megacycle frequency of the electrons in the doughnut. A two-counter telescope, located at about 20 inches away from a one-fourth inch lead target and about 20 degrees from the photon beam direction, was used to measure an accidental coincidence counting rate as a function of the length of delay line in one input to the coincidence circuit. When the length of delay cable was chosen equal to integral multiples

of the period of the rf oscillator, the coincidence counting rate was of the order of 100 counts per unit of integrated beam; on the other hand, when the length of delay line was chosen to be equal to one-half odd integral multiples of the period of the rf oscillator, the coincidence counting rate was less than about two counts per unit of integrated beam.

An estimate of the width of a single pulse of photons can be obtained from the measurement by unfolding the Gaussian resolution function of the coincidence circuit. If the time variation of the intensity of the photon beam is assumed to be a Gaussian function, then the rms value of that Gaussian is found to be less than 1.5×10^{-9} seconds.

A calculation by E. M. McMillan indicates that the full energy photon beam should exhibit fine structure if the amplitude of the azimuthal phase oscillations at full energy is less than about one radian. The experimental result is another confirmation of the theory of phase stability.

13. The Triton Reaction ($p + d \longrightarrow t + \pi^+$)

Kenneth C. Bandtel, Wilson J. Frank, Richard Madey, and Burton J. Moyer

Ruderman (in UCRL-1819 or PR 87 (383) 1952) has calculated the expected angular distribution for the process $p + d \longrightarrow t + \pi^+$. The reaction was viewed as a two-step process: the first step involves a $p + p \longrightarrow d + \pi^+$ reaction between the incident proton and the proton in the deuteron; the second step involves a pickup process between the newly-formed deuteron and the left-over neutron. The first step imposes a $\cos^2\theta$ distribution, while the second step smears it slightly and reduces the cross section for the forward center-of-mass triton angles (or those directions in the center-of-mass system in which the final triton moves opposite to the initial deuteron motion.)

Our preliminary and tentative results are given in the following table. The differential cross sections are uncorrected except for pion absorption and decay in flight.

Triton Center-of-Mass Angle	Differential Cross Section (micro-barns/steradian)
30	0.11 ± 0.05
50	0.24 ± 0.02
70	0.18 ± 0.02
90	0.25 ± 0.03

In future runs, better statistics will be obtained at 30° as well as for the backward angles to test whether the distribution has any $\cos^2\theta$ tendencies.

14. Status of the 22-inch Spiral Orbit Spectrometer

W. F. Dudziak and R. Sagane

The assembly of the 22-inch spiral orbit spectrometer which was proposed in January has been completed. The following brief summary will describe the present status of the spectrometer.

A flip-over test (i.e., the ability to position the magnet so that the axial symmetric axis of the magnetic field is horizontal or vertical) has been found satisfactory.

The cooling system is composed of copper fins positioned between coil pancakes through which a supply of Calgon water is circulated. A test of this system has been found satisfactory, inclusive of the safety devices whose function is to shut off the current supply when water flow in the cooling system has been restricted.

Current temperature characteristics of the magnet were tried but no reliable information was obtained due to shorts which developed between some of the coiling discs and coil pancakes.

Magnetic characteristics were not obtained for the same reason that a satisfactory test of temperature characteristics could not be made.

The design of the vacuum chamber was found satisfactory. During the tests, trouble was experienced in obtaining a high vacuum. These troubles resulted from poor machine finishing of the counter bored holes in the pole tips. This has been corrected and a vacuum of 10^{-5} mm Hg can be obtained with ease.

The adjustable platform design was found satisfactory for use of the magnet with the axial symmetric axis of the magnetic field horizontal or vertical.

The mounting of the pole-pieces for obtaining a magnetic field with a $1/r^n$ drop-off, and for obtaining partial focussing of a meson beam, has been found satisfactory.

The 24 mil glass silicone fiber insulator called for in the design and used as an electrical insulator between the coil pancakes and cooling fins proved to be too soft and therefore easily ruptured. This was the cause of the shorts which were found to exist between some of the coil pancakes and cooling fins. As a result, this is now being replaced with a 1/32 inch hardened glass silicone fiber insulator.

Preparations have been completed for the experiments: 1) Measurement of the $\pi^{\pm}$ absolute production cross sections from deuterium at 90° to the proton beam, and 2) Measurement of the $\pi^{\pm}$ production cross sections as a function of Z at 90° to the proton beam from 15 elements. The experiments will be done as soon as the magnet is available and all the characteristic studies of the magnet are satisfactorily completed. Towards this end, the experiment for calibrating the spiral orbit spectrometer has been completed up to a meson energy of 56 Mev. The calibration experiment for higher meson energies is now in progress.

15. Total Cross Section for Positive Pions in Hydrogen

S. Leonard and D. Stork

A background of random pulse height in the first run on π^+ scattering in hydrogen permits only an upper limit of 15 mb to be stated for the total cross section at 30 Mev. It is expected that the effect of this background will be reduced

by the use of an additional thin collimating crystal counter and with an improvement in pulse height resolution. The performance of the 14 inch liquid scintillation back counter was quite satisfactory.

16. Total Cross Sections for Positive Pions in Light Nuclei

D. Stork

The attenuation cross sections for positive pions in Be, C, and Al has been measured and found to be about two-thirds nuclear area at 50 Mev. This study is being extended, using the same pulse height technique, to 35 and 70 Mev, for the above nuclei in addition to Li and Cu.

17. π^+ Production as a Function of Atomic Number

J. Merritt and D. Hamlin

Further tests were made at the synchrotron using the new light pipes and liquid scintillators in order to observe the existence of a voltage plateau for the photomultiplier tube viewing the third crystal of the π - μ detection system. No plateau was observed, and the tests were discontinued.

18. Excitation Function for $p + p \longrightarrow \pi^+ + d$

D. Hamlin and J. Merritt

A trial run was made at the cyclotron to check the feasibility of using a 180° magnetic channel to extend the excitation work of A. G. Schulz reported in UCRL-1756. Results are still being analyzed.

19. Production of Changed Pions by Protons on Carbon at 180° to the Beam

S. Leonard

Work has been continued on the measurement of the yield of changed pions at 180° by 340 Mev protons on carbon, using nuclear emulsions.

Preliminary values for $d\sigma/d\Omega dE_\pi$, uncorrected except for meson background, are:

E_π (Mev)	$(d\sigma/d\Omega dE_\pi)$ for π^+	$d\sigma/d\Omega E_\pi$ for π^-
15	2.44 ± 0.24 (x 10^{-30})	2.32 ± 0.45 (10^{-31})
30	2.30 ± 0.18	2.56 ± 0.36
50	1.28 ± 0.13	1.36 ± 0.41
70	0.55 ± 0.07	0.315 ± 0.13

Errors are standard deviations based on statistics only. Additional measurements will be made for meson energies of 110 Mev and 9 Mev.

20. Low Energy Pion-Nucleon Interaction

O. Heinz

During the last three months, an attempt was made to determine the cross section for π^+ production in p-p collisions at about 22 Mev with greatly improved energy resolution. The nuclear emulsions exposed during this run are now being scanned but so far no effect due to $\pi^\pm$ nucleon interaction has been found. A preliminary run was made to determine the possibility of using an electronic detection scheme in this energy region. The results indicate that the π - μ detection scheme in its present state does not have the energy resolution required for this experiment, and that the very small difference in the CH_2 and C cross sections makes this equipment also unsuitable for the neighboring energies.

21. Photographic Pulse Height Analysis Method

L. Kerth and B. Youtz

A photographic method of pulse height analysis has been studied in some detail. The technique is similar to the one used by Maeder, (H.P.A. 20, 139, 1947), in which pulses displayed on an oscilloscope are photographed through an attenuating wedge. The pulses are shaped electronically and appear on the oscillograph as a horizontal trace whose vertical displacement is proportional to the height of the original pulse. Exposure on the photographic film varies exponentially along the length of the trace, due to the attenuating wedge, and produces an image of pulse height vs. the log of the number of counts at each pulse height. The number of channels in this analyzer is determined only by the ability to focus the oscilloscope. By using 35 mm linograph pen film and an f:2 lens, it is possible to record a single pulse in a channel. Thus, the method is useful for the low counting rate experiments usually found in local physics experiments.

A critical evaluation of the method indicates that it is probably not feasible to extend the accuracy to better than 2 percent.

22. Investigation of Electric Excitation of Heavy Nuclei

R. Wallace

It is the intention of this experiment to investigate electric excitation by observing the energy spectra of the inelastically scattered protons. Most of this period was spent on an extensive repair of the 10 channel pulse height analyzer and the simultaneous development of a new type of pulse height analysis involving a photographic density wedge.

The photographic method was suggested by Maeder (H.P.A. 20, 139, 1947). A pulse shaper has been constructed using crystal diodes that holds the counter pulses being analyzed at their maximum excursion for any time up to 30 microseconds. The pulses are then returned to the base line without overshoot. This device makes it possible to greatly increase the exposure of the film from each pulse.

The pulse height analysis consists of displaying pulses as horizontal traces on an oscilloscope tube whose heights above the base line are proportional to the incoming counter pulses. These oscilloscope pulses are photographed by a still camera through an absorbing wedge whose density varies linearly in the horizontal direction. The pattern on the film will then be a semi-log plot, linear in pulse height and logarithmic in number of counts at a particular pulse height.

The absorbing wedge does more than give the logarithmic relation; it also makes the errors due to failure of the photographic film to follow the reciprocity law cancel out. This is especially important if it is to be possible to secure quantitative results from this method. The absorbing wedge was made from two pieces of lucite, one clear and the other smoked. These pieces of lucite were cut in the form of identical wedges and then glued together with carodian balsm. Several other methods of producing a wedge were investigated, but no simple method of sufficient accuracy was discovered. The problem involves the generation of a function that varies logarithmically in time.

It is planned to hold the pulses with the pulse shaper and to use no horizontal sweep, thus producing dots at varying heights on the oscilloscope tube. These dots will then be spread out into lines by a cylindrical lens before the light passes through the camera lens and wedge. The thin cylindrical lens gives straighter lines than can be secured directly on the tube face, since the tube has more barrel distortion than the lens has.

23. Charged Particles from Heavy Elements

R. Eisberg and G. Igo

Investigation of the energy spectrum of charged particles emitted in the bombardment of heavy elements with 32 Mev protons from the linear accelerator has been continued. Particles are allowed to stop in a sodium iodide crystal observed with a 5819. The energy spectra are obtained by running a pulse height analysis on the resulting electrical pulses. The nature of the particles is determined by comparing their ionization before being stopped, as measured by a proportional counter, with their energy. The proton energy spectrum from lead at 90 degrees to the incident beam has been obtained and verified using two different methods of pulse height analysis. This information will be reported at a meeting of the American Physical Society in the near future. Installation of the 24 inch remote controlled scattering chamber has been completed. This useful device operates quite satisfactorily.

24. Investigation of Short Radioactivities

J. D. Gow

A run was made using a teflon target with magnetic analysis of the resulting β rays in an effort to observe the reaction $F_{19}(p, 2n)Ne^{18}$. An activity was found which decayed by positron emission with a half-life of 1.2 ± 0.2 seconds. It was demonstrated that relatively high energy protons are necessary to produce the observed activity and that it was not produced from carbon. The activity is tentatively assigned to Ne^{18}, and more runs are to be made to provide more positive identification and to measure the properties of the β ray spectrum.

25. Synchrotron Studies

A. C. Helmholz

The time used for experiments on the synchrotron has not been so great as in some previous quarters because of (1) a shutdown due to vacuum difficulties, (2) some mechanical work on the pair spectrometer magnet plus some field measurements, which will be useful for future experiments (3) some injector tests which have been very fruitful, and (4) some difficulties with the radiofrequency system, which is letting electrons hit the target early. These last difficulties have not been cured as yet.

A number of experiments have been finished up and written up as UCRL reports. S. Colgate and F. Gilbert have finished the work on annihilation of positrons in flight. C. Andre has finished the work on π^0 mesons from H and D, and J. Carrothers has finished the π^-/π^+ ratio experiment.

R. Madey, W. J. Frank, and K. Bandtel have done some further work on the $\gamma + d \rightarrow \pi^- + p + p$ reaction. They have made observations on the fine structure of the x-ray beam, showing the effect of the "radiofrequency bunching" of the electrons. Preliminary work on the reaction of gamma rays on the odd neutron in Be to give $\pi^- + p$ has given indications of a much smaller effect than for the neutron in the deuteron. Further work on these two problems is projected.

Oscar Kolar, of the cloud chamber gorup, has made a run with the x-ray beam passing through a H_2 filled tube in the middle of a continuously operated cloud chamber. The pictures should show Compton protons, but they are so small in number that the experiment does not seem feasible by this technique.

Fred Coensgen and Noah Lewis have made some exploratory runs detecting γ-rays and electrons with the view of doing an experiment on the Compton effect at energies in the range of 200 Mev. The experiment seems feasible, using the pair magnet and coincidence counting of electrons and γ's, and design of an experimental setup is proceeding.

R. S. White and Nelson Jarmie, assisted by Jack Merritt and Daniel Hamlin, have attempted to measure π^+ mesons at small angles to the beam electronically by means of the π-μ decay gear. The results have been disappointing in that the present equipment does not seem suitable for this experiment of detecting the ratio of π^+ yield from H and D.

Richard Post and Charles McDonald have done preliminary runs in an experiment to measure the yield of low energy photo π mesons. The problem here is to distinguish the mesons from other particles and this will be done by measurements of dE/dx and E.

Dr. Raphael Littauer from the Synchrotron Laboratory at Cornell made some calibration runs with a standard ionization chamber during this quarter. His results indicated that the figure of 1.47×10^9 equivalent quanta per nunan which has been in use at the laboratory for some time is about 25 percent higher than the figure in use at Cornell. Further calibration runs are being made to see whether this 1.47 figure which was measured some time ago by Blocker, Kenney, and Panofsky has perhaps changed due to changes in the nunan meter.

26. Theoretical Studies

David L. Judd

Charged Scalar Meson Field. B. D. Fried and R. J. Riddell

Meson field theories are being studied by the Tomonaga approximation method. So far the problem of the charged scalar field has been treated by the one-mode Tomonaga approximation. In this case the resulting, simplified equations have been treated rigorously to show that a solution to them exists in the strict mathematical sense. Also, a formula for the energy levels of the system has been obtained. The same method has been extended to the case of the charged pseudoscalar field and at present the problem of the inclusion of an excited state for the mesons is being studied. This is essential in order to treat the problem of meson-nucleon scattering.

Neutral Pion Decay. L. Smith

A detailed study of the mechanism of neutral pion decay is in progress. Calculations such as that by Dalitz include only proton-antiproton intermediate states whereas neutral intermediate states also occur. These neutron-antineutron states may be approximately dealt with by using a Pauli term to describe their magnetic moments. Using the methods developed by Schwinger an expression for the equivalent interaction between neutral mesons and the electromagnetic field is being derived by construction of the appropriate Green's function. This interaction will be used to study the lifetimes for the decays, into photons, a photon and a pair, and into two pairs.

Design for Uniformity in Bevatron Electric Field. L. Smith

Because the bevatron inflector channel is to be some 15 feet long and less than an inch wide, it is necessary the electric field be uniform to a few tenths of a percent in the region occupied by the beam. Such uniformity can be achieved by adding ridges to the high voltage electrode above and below the beam. The proper dimensions of these ridges are being determined by using relaxation methods to calculate the field distribution for a variety of ridges, with the idea of interpolating between the best distributions for a final design.

Treatment of Symmetrical Pseudoscalar Field. J. V. Lepore

An attempt is being made to treat the quantum theory of the symmetrical pseudoscalar field by methods similar to those which are suggested by classical field theory since it appears that the dominant features of many recent experimental results are purely classical. Thus, the excitation functions of pion reactions seem to depend mainly on classical features whereas cross section ratios for processes resulting in pions of different charge depend on the quantum properties of "isotopic angular momentum."

Electron Radiation in Orbits. M. Neuman

A consistent quantum mechanical approach to the problem of radiation from electrons in orbits has been constructed. This is being applied to the case of a circular orbit and an approximate cancellation of recently alleged quantum effects has been found.

Relativistic Theory Study of Meson-nucleon Scattering. S. Tamor and S. Gasiorowicz

A study, based on the Heitler integral equation, of the relativistic theory of meson-nucleon scattering is being made in order to see whether the concept of a nucleon "source size" enters naturally into the theory. This is being carried out by determining a renormalized "reaction operator" to fourth order in the coupling constant. As is well known the use of lowest order operator is equivalent to taking account of the radiation damping due to real processes. The damping due to virtual processes may be expected to lead to structure effects for the nucleon and thus to a virtual level in the scattering since the position of such a level is related to the effective nucleon size. The symmetrical pseudoscalar meson theory is being used. This investigation was stimulated by hearing of a similar one by F. J. Dyson.

The relativistic theory of photo-pion production is being approached from the point of view of the Heitler integral equation to ascertain the manner in which nucleon structure, which can be expected to emerge from such a theory, is involved. This work is motivated by considerations discussed in the foregoing paragraph.

π^- Production Cross Section. S. Gasiorowicz and B. Macdonald

Negative pion production by neutron-deuteron collisions is being studied to see if one can interpret experimental information about this process in terms of a cross section for negative pion production in neutron-neutron collisions consistent with the theory of charge independence. This implies that the neutron-proton π^- cross section is small and that the neutron-neutron π^- cross section is the same as the proton-proton π^+.

Strong-Focussing Accelerator Design Principle. D. L. Judd

Various studies aimed at obtaining more detailed data on the strong-focussing principle (i.e., periodic alternation of the sign of the "restoring force constant" of a motion) in accelerator design are under way.

Study of Pion Production from Complex Nuclei. S. Bludman

An analysis of experiments on pion production by nucleon bombardment of complex nuclei is in progress. This work consists mainly of seeing to what extent such experiments can be understood by folding the free particle cross sections into an appropriate nuclear momentum distribution. It is an extension of earlier work by Henley but is being carried out in considerably more detail in view of recent evidence which suggests that proton-neutron collisions produce relatively few mesons of either charge and that proton-proton collisions leading to a triplet final state yield mesons with a $1/3 + \cos^2 \theta$ angular distribution.

Other Theoretical Studies.

A study is being made by Heckrotte to ascertain whether one can, in the case of a three body problem, obtain a usable, systematic sequence of aproximations starting from the so-called "impulse approximation." A study of the inelastic "scattering" of protons by nuclei is being made in order to interpret

new experiments which detect the simultaneous ejection of two protons. This is an extension by Heckrotte and Hall of earlier work by Cladis and Wolff. Work has been completed by Huddlestone on a report concerning graphical methods for the construction of plane magnetic fields having a plane of symmetry.

II ACCELERATOR OPERATION AND DEVELOPMENT

1. 184-inch Cyclotron Operation

J. Vale

Operation of the cyclotron during this period averaged about 92 percent of the time that the crew was on duty. The major cause of outage during this time was bearing failures. The generator for the magnet excitation had considerable trouble with one of the bearings but that seems to have been corrected now. In addition, capacitor rotor bearings had to be replaced.

In September a beam of helium ions of mass three was accelerated for the first time. This necessitated some adjustments to the oscillator to get the proper range of frequencies for these particles, since the required frequency range lies between the proton and deuteron ranges and the oscillator was not originally set up to work over this range.

Particles of He^3 were obtained with energy of about 500 Mev. In addition, these particles can be stripped by thin targets to produce deuterons of about 325 Mev.

2. 60-inch Cyclotron Operation and Development

Operations. William B. Jones

The operation of the 60-inch Cyclotron during this quarterly period was as follows:

Alpha bombardments	519.5 hrs
Deuteron bombardments	220.0 hrs
Proton bombardments	91.0 hrs
Carbon bombardments	76.0 hrs
Development	197.0 hrs
	1103.5 hrs
Outage	353.5 hrs
	1457.0 hrs
Shutdown	750.0 hrs
Daylight savings time change	1.0 hrs
	2208.0 hrs

Operation efficiency: 75.7 percent.

On September 18, 1952, newly designed feelers were installed. These feelers are vertical, water-cooled copper tubes of 3/8 in. diameter and 1 3/16 in. apart, center to center (Figure 1a). The purpose of these tubes was to reduce the vertical de-focussing that the previous plate type feelers cause. Through the reduction in vertical de-focussing, it was hoped to reduce the amount of vertical oscillations.

Using the method of taking beam patterns discussed in UCRL-1729, p. 34, it was found that the vertical blowup had been reduced by nearly a factor of two. The patterns were taken with the ion source at several positions with respect

to the feelers and, at all times, the results indicated some degree of reduction in the vertical oscillations.

The apparent power threshold for the alpha beam has been reduced to the point where it is possible to obtain some beam at our lowest oscillator power level (50 kilowatts). Our internal beam showed a more marked improvement at threshold levels; at the lowest power level we had a probe beam of 185 microamperes. The beam was power sensitive and increased to 340 microamperes at 72 kilowatts of oscillator power and a dee to dee voltage of 185 kilovolts. Determinations of the maximum deuteron or proton beams have not been made as yet. An internal beam of 425 microamperes at 50 kilowatts was recorded as well as an external beam in excess of 50 microamperes at 75 kilowatts. A continuous run of alpha particles for a period of 42.5 hours with an average external beam of 27.8 microamperes indicates that the performance has been consistent and steady.

The feelers are still in the testing stage and all the positions of the ion source with respect to the feelers have not been investigated. However, we have operated at a point north of the northern feeler with a beam level of two-thirds the beam with the ion source between the feelers. There is evidence of the beam actually striking the southern feeler when we are in the northern position so it is very possible that a single pole feeler will serve the same purpose as the two poles. The single feeler would have the advantage of reducing radial spreading of the beam upon extraction from the ion source.

Internal Beam Probes. G. Bernard Rossi

During this quarter, much interest has centered around the use of the internal beam of the 60-inch Cyclotron. Previously, the procedure for performing such bombardments has been to hard-solder the target material to a copper probe head (Figure 1b). This method has the following limitations:

1) Material has to be refractory and easily soldered to copper with silver solder.
2) Large quantities of material (24 cm^2 area) were needed.
3) Beam density was minimized by bombarding incident to the beam (15 degrees).

Attempts to bombard the standard size probe targets, at right angles to the beam, led to increased beam density but resulted in target destruction. The effective target area in this case was about 2 cm^2, the maximum beam level varying with materials and mode of mounting. In general, no more than 100 microamperes could be used.

A 1/4 in. o.d. copper tube with 0.010 in. wall was set between "O" rings (Fig. 2) and bombarded at 90 degrees. Rupture of the tubing occurred at 200 microamperes of deuterons. This level (200 microamperes) seemed consistent regardless of the material used. To date, beryllium, copper, aluminum and magnesium have been bombarded in this manner. In the cases of aluminum and magnesium, thicker wall sections were used to prevent the formation of free hydrogen within the water column. At a production rate of 3 hydrogen molecules per 100 ev beam dissipation, it would be possible to form 3.6×10^{18} molecules per microamperes of beam, based upon full energy loss of either deuterons or alpha particles in the water. The wall thickness was chosen so that all of the useful beam range would be utilized in the material.

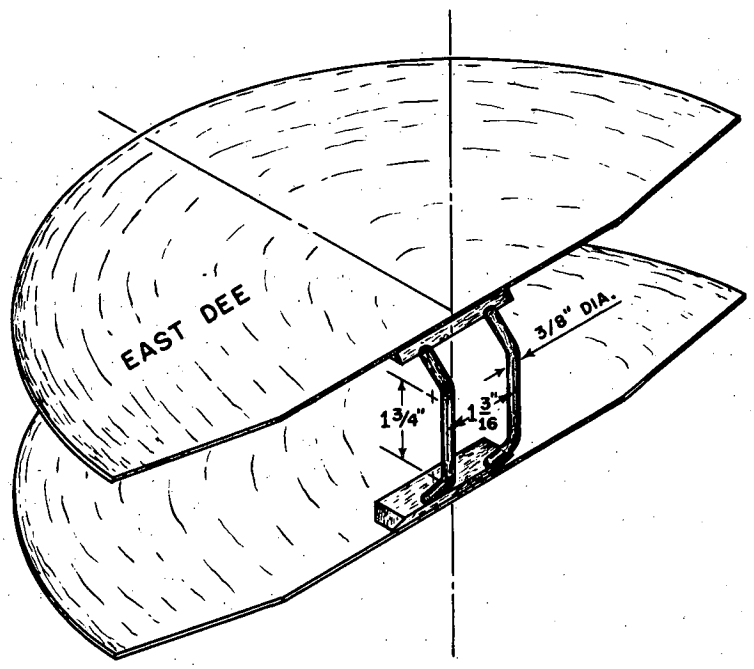

CROSS-DEE FEELERS
SYMMETRICAL

MU-4755

Fig. 1a

The tubes bombarded have been measured with a Zeus beta-gamma type meter for radiation levels. The measurements varied from 40 r. to 100 r. surface activity after approximately 15 minutes decay time. These figures indicated the need for special handling equipment and lead to the development of the target holder shown in Figures 3a and 3b. The arms of this holder are made to move paralled to each other so that the target may be removed from it without approaching closer than three feet. Figure 3a indicates the open position; Figure 3b, the closed.

Various geometric configurations (Fig. 4) of beryllium targets were investigated that would allow maximum beam density. In this case the beryllium was used as a neutron source with the target material contained within the wall. The Al^{27}_{13} (n, α) Na^{24}_{11} reaction was used to monitor the neutron beam. Using 0.10 barns for the reaction cross section, the neutron density was calculated as 2×10^{6} neutrons per cm^2. This was done at 50 microamperes of deuterons of 17 Mev on the beryllium holder shown in Figure 4. Some material was bombarded within the cooling stream (Figure 5). This method requires the use of a thick-walled target receptacle to withstand the water pressure.

Figure 6 illustrates the method now being considered to eliminate the water pressure hazard and to afford better neutron target geometry. In addition, methods of rotation of the beryllium about the neutron target are being considered so that greater target beam intensities can be handled. The motivation behind this beryllium target design is to make useful the large high energy neutron fluxes that are available as a result of the large deuteron circulating beam. With a proper rotation scheme and proper geometric arrangement of the secondary target material, very large neutron densities are anticipated since the internal deuteron beam intensity can be as great as one milliampere.

The large cylindrical holders in Figs. 7 and 8 represent a method of bombarding foils in the internal beam. A gasket outlining the 1 1/2 in. x 1 1/2 in. foil acts as a seal for the cooling water and against the vacuum. The cooling water flows directly in contact with the bombarded foil in a channel provided by a 0.010 in. recess in the area under the foil. To date, foils of silver, gold, aluminum, copper and titanium have been bombarded. All have withstood 100 microamperes of deuteron beam. The advantages offered by this method are that (1) no soldering is needed, (2) small areas may be bombarded and (3) metals of low melting point, but with high conductivity, are acceptable.

A large reduction in personnel irradiation resulted with the use of this method. Removal of the foil requires only that the inner plug be pushed through the outer copper band. From the chemists' viewpoint, no milling or filing is needed. Since the foil thickness can be varied so that only energy above reaction threshold is used, lessened dissolution time and material mass results.

With all of these tubular targets, the fork clamp pictured in Figs. 3a and 3b can be used. The design of this fork, as well as the foil window target, were done by C. A. Corum of the 60-inch Cyclotron staff.

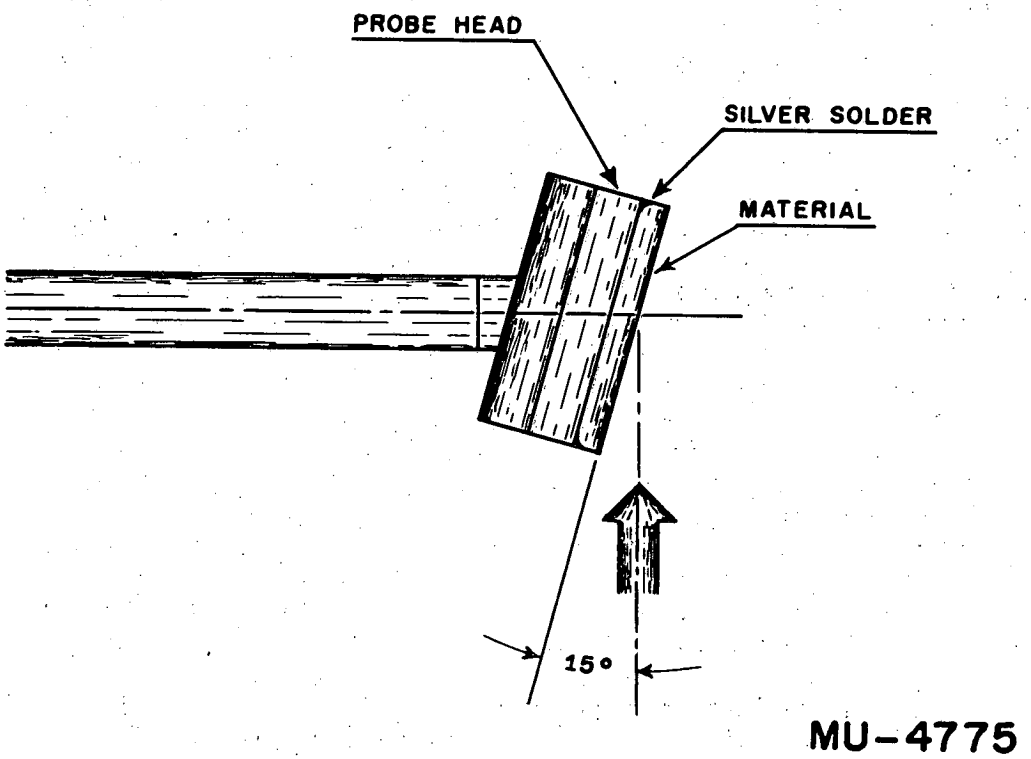

Fig. 1b

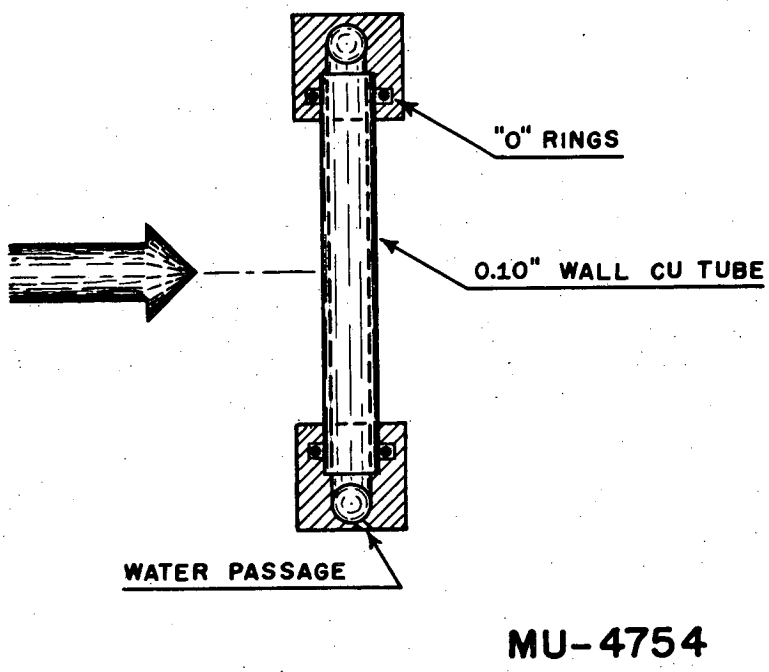

Fig. 2

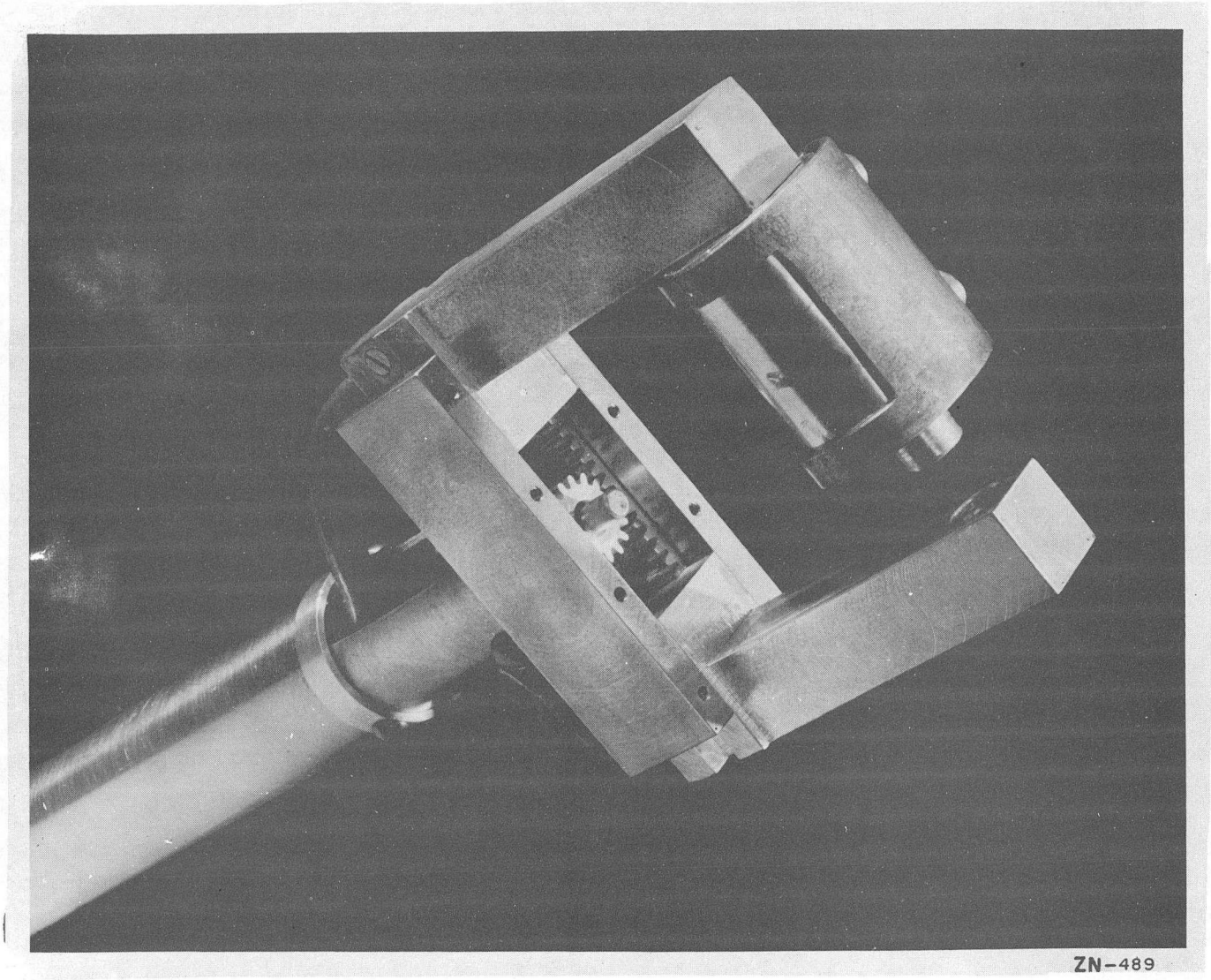

Fig. 3a

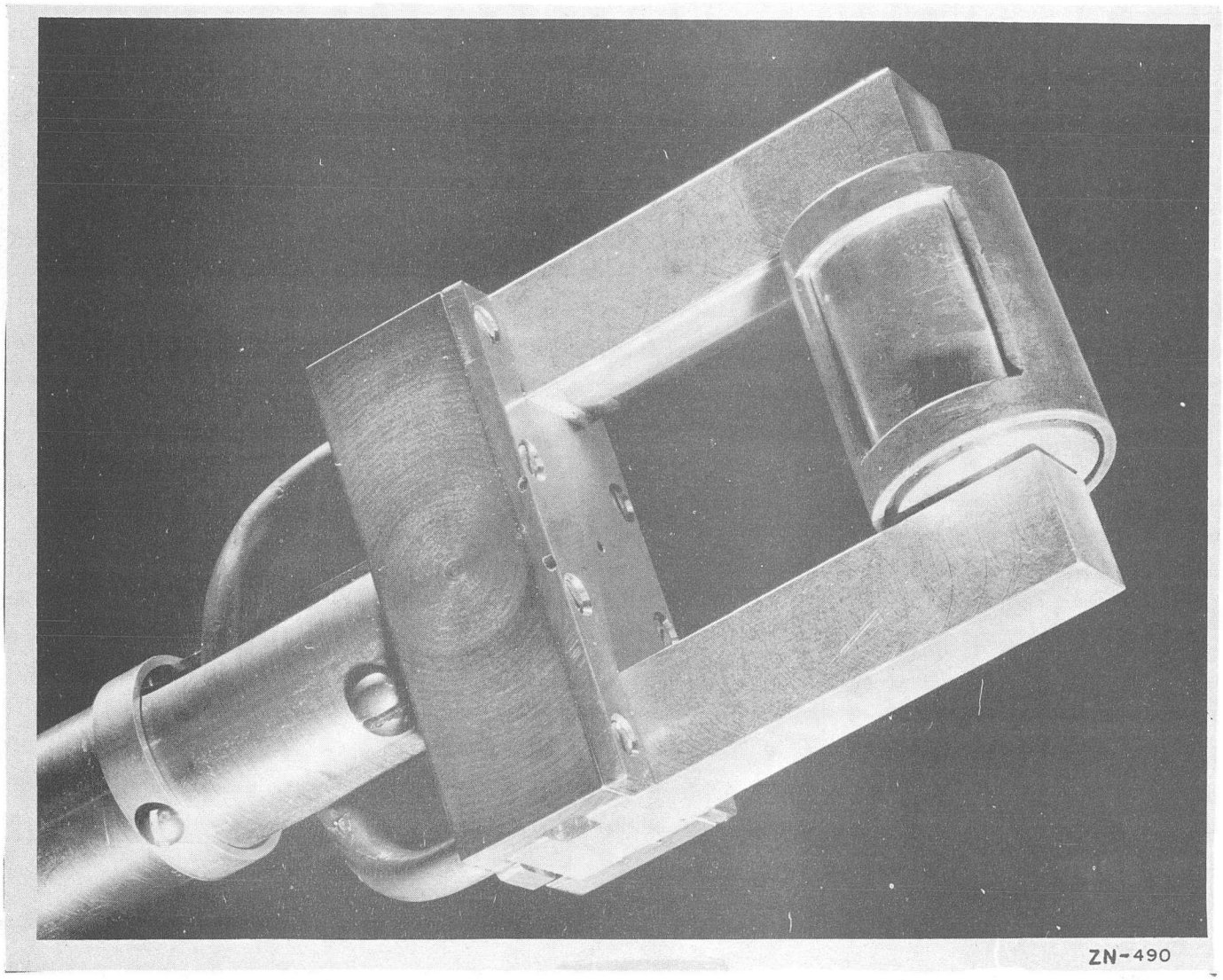

Fig. 3b

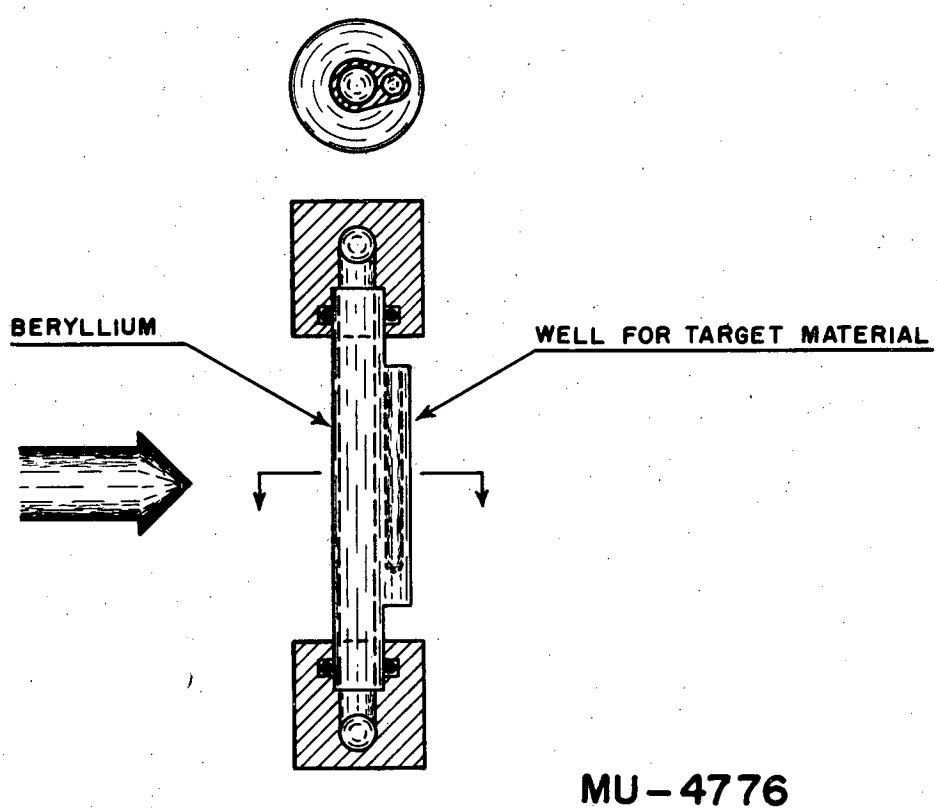

Fig. 4

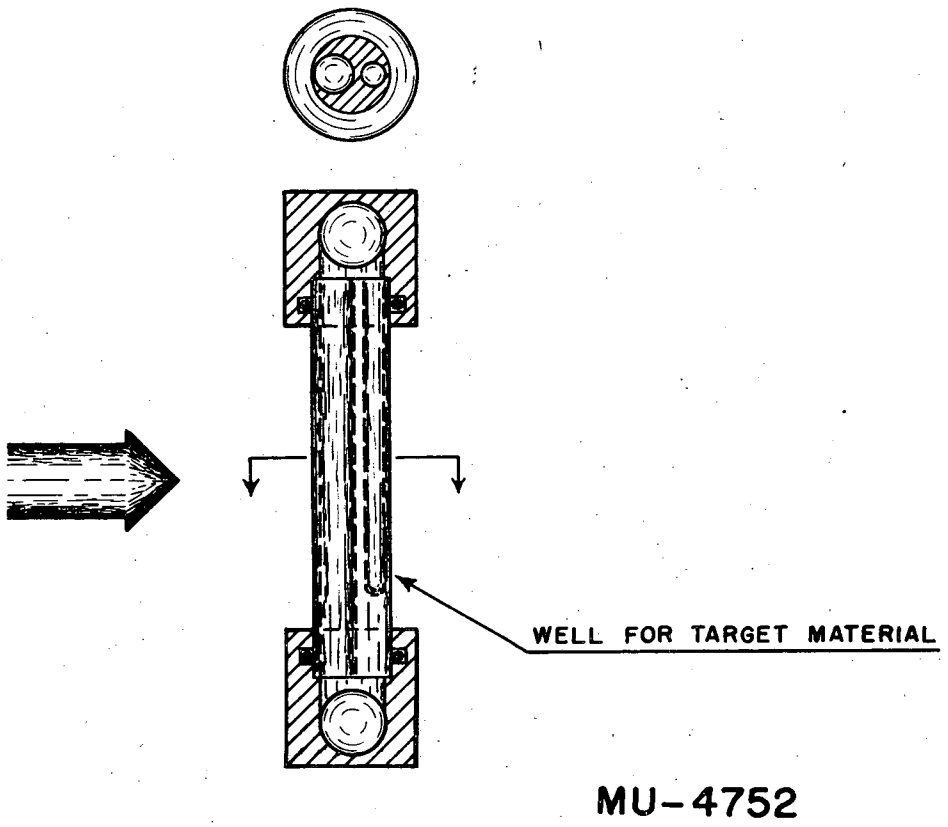

Fig. 5

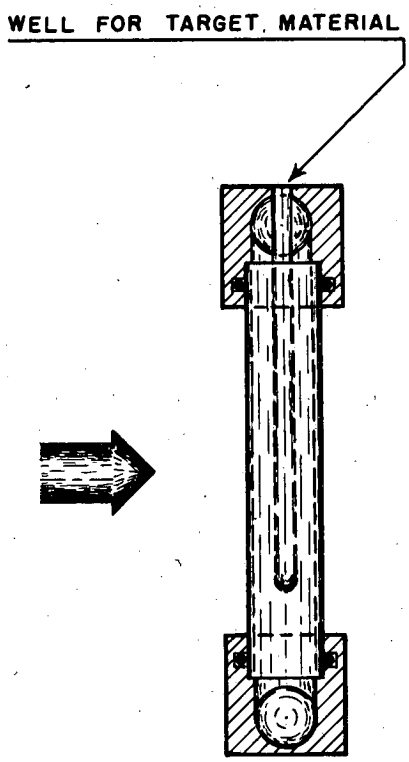

MU-4753

Fig. 6

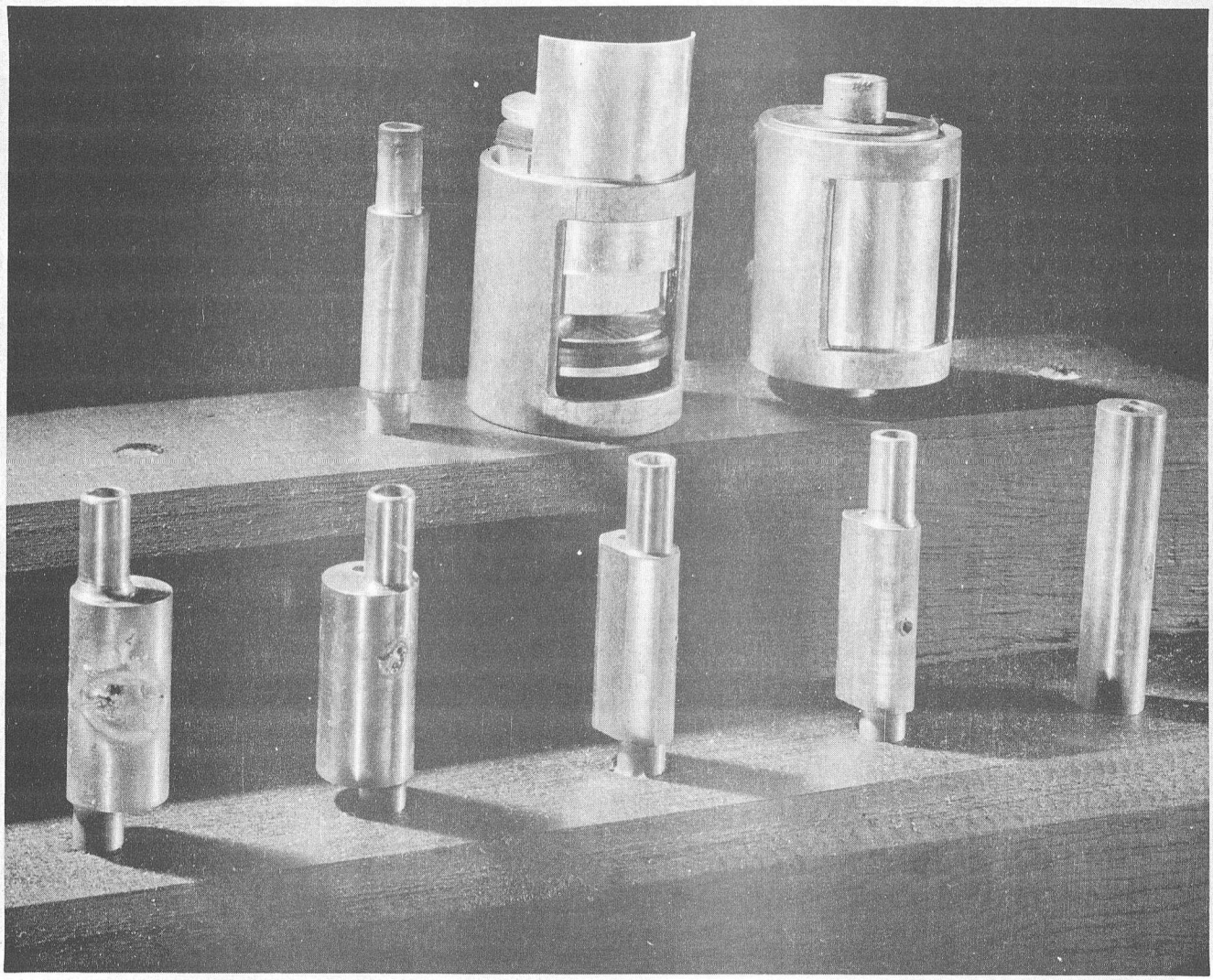

Fig. 7

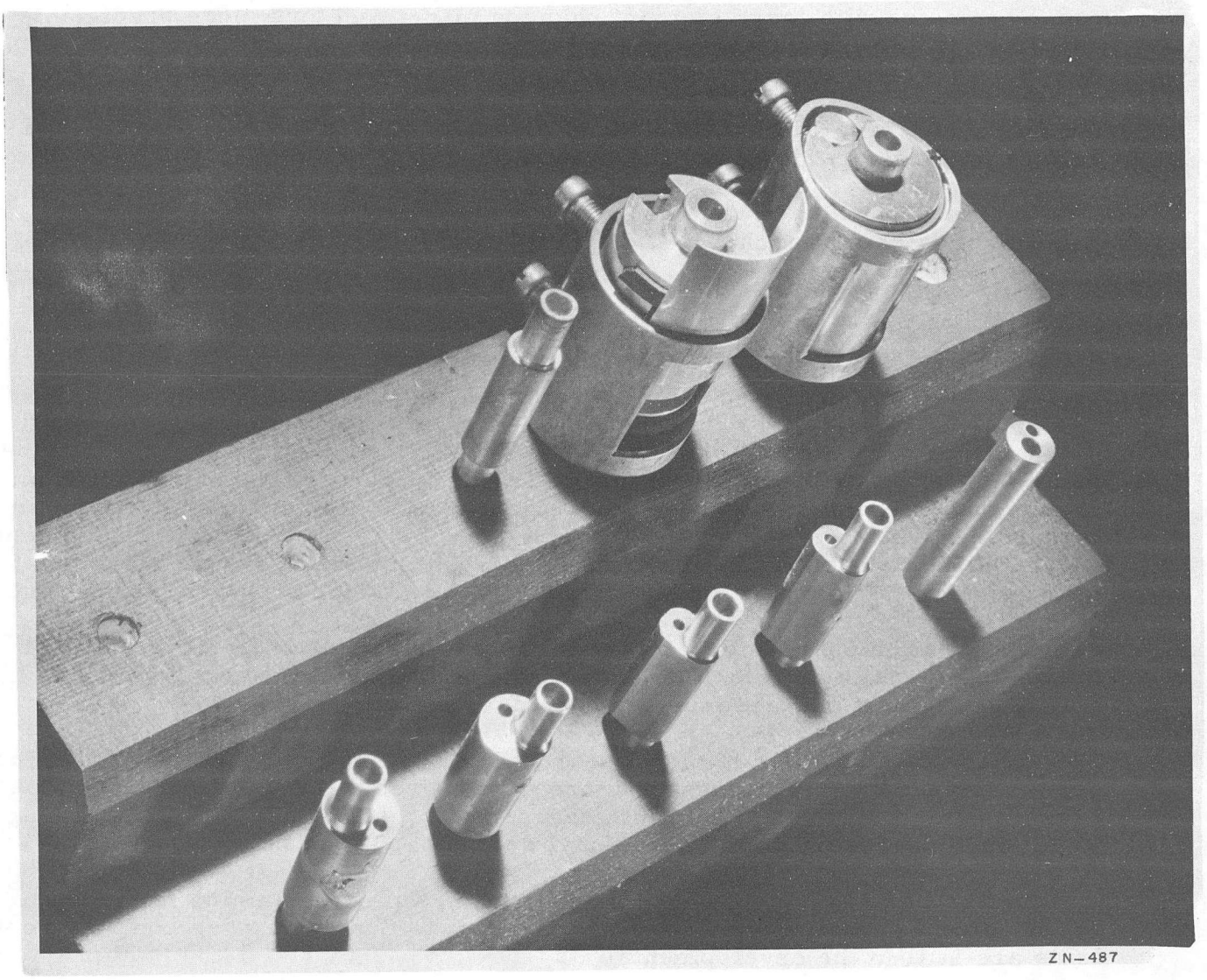

Fig. 8

3. Synchrotron Operation

George C. McFarland

During the month of August the synchrotron beam was subject to fading. Attempts to repair the plating by spraying with electrical conducting silver paint were unsuccessful. Applying conducting silver paint to the inside of the vacuum donut with sponges eliminated the fading. Beam intensity rapidly improved.

In September experiments in injector geometry and spacing of the elements conducted by Wesley Rutz resulted in higher beam intensities. An improved injector with these element changes made injectors more predictable and dependable as far as beam intensity was concerned.

Late in September a vacuum leak developed requiring dismantling of the machine. Several days were spent in attempting to improve the "Q" and voltage holding capabilities of the resonator.

The synchrotron was assembled during October and the beam made available for physics research.

4. Linear Accelerator and Van de Graaff Operation

W. Olson

Beam current coil operation ahead of the analyzing magnet has now been made independent of "exit electrons." This, in effect, also insures freedom from errors due to changes in tank r.f. level. A second electron magnet, used in conjunction with the existing electron magnet as an "electron trap" in the sense of the well known television ion traps, achieved this end. Further investigations of the energy range of the exit electrons will be carried out when the current coil pulse integration circuits are completed. These are in process of development. The pulse integration will, as now planned, be achieved through the use of electronics which portray numbers proportional to pulse area. A 1/4-scale current coil assembly is nearing completion.

The r.f. monitor for the linear accelerator has more reworking in progress; revised control ranges, and one percent resistors are to replace the present components in the multiple channel volt meter chassis. These changes were found necessary upon full channel operation.

The 200 megacycle phase measuring circuitry pertaining to the linear accelerator beam energy monitor and the Van de Graaff buncher control problems are still in the developmental stage.

Statistics

Running time	81.3 %
Repair	15.7 %
Maintenance	3 %

5. Bevatron Development and Construction

W. M. Brobeck

Magnet.

The test of the magnet without pole pieces, which was started on July 31, is expected to be completed by November 7. The magnet power supply has operated satisfactorily with full power from both motor-generators connected to the magnet. The following were significant developments:

1. Reconnection of the rectifiers associated with each generator from parallel to series so that each generator-rectifier set supplies half magnet current at full voltage solved the problem of unbalanced loading between the two machines.

2. Moving the magnet ground from a midpoint between the ignitron inverter-rectifier units to a midpoint on the magnet windings made a considerable reduction of the magnet voltage ripple. Most of the erratic sparking between magnet core laminations disappeared after this change.

Delivery to UCRL of the pole base plates had just begun at the end of October. Delivery to UCRL of the pole tip plates is expected to begin by January 1, 1953. Ninety-eight percent of the steel stock had been delivered to the fabricator by October 1.

Tests made on the shield and peaking transformers in the magnet circuit have shown that both units must be redesigned to eliminate spurious signals.

A 1/7-scale magnet model was designed and built during this period. This model will be used to make a final and more accurate check on the pole tip outline than was possible with the 1/12-scale magnet model. It is hoped to complete these measurements in November.

Vacuum System.

The first tangent tank was received at UCRL on October 29 and will be installed in the east tangent area of the Bevatron during November. All of the transition tanks (8) have been received at UCRL, and two have been tested and made vacuum tight. The first curve tank was 50 percent assembled at the end of the period.

Injector.

Operational tests of both the ion gun and linac are expected to begin in December. At the end of this period the fabrication of the ion gun was 90 percent completed and the ion gun enclosure was 100 percent completed. The drift tubes were installed and aligned in the linac, and the Mercury diffusion pumping system for the linear accelerator is being assembled.

Inflector.

Mechanical design of the inflector has been started. The beam will be turned 40 degrees on an 18 foot radius requiring an electric field strength of

35.8 volts per centimeter. Adjustments for the radial position of the inflector exit, the height of the inflector, and the angle of the beam from the horizontal plane will be provided. The section of the high voltage electrode one foot from the exit end will have independent voltage control to provide adjustment for the angle of the beam in the horizontal plane.

Information Division
12-18-52 bw