UCRL-20579
c.2

University of California

Ernest O. Lawrence Radiation Laboratory

A JOSEPHSON JUNCTION AMPLIFIER

John Clarke* and James L. Paterson

May 1971

TWO-WEEK LOAN COPY

This is a Library Circulating Copy which may be borrowed for two weeks. For a personal retention copy, call Tech. Info. Division, Ext. 5545

Berkeley, California

UCRL-20579
c.2

DISCLAIMER

This document was prepared as an account of work sponsored by the United States Government. While this document is believed to contain correct information, neither the United States Government nor any agency thereof, nor the Regents of the University of California, nor any of their employees, makes any warranty, express or implied, or assumes any legal responsibility for the accuracy, completeness, or usefulness of any information, apparatus, product, or process disclosed, or represents that its use would not infringe privately owned rights. Reference herein to any specific commercial product, process, or service by its trade name, trademark, manufacturer, or otherwise, does not necessarily constitute or imply its endorsement, recommendation, or favoring by the United States Government or any agency thereof, or the Regents of the University of California. The views and opinions of authors expressed herein do not necessarily state or reflect those of the United States Government or any agency thereof or the Regents of the University of California.

Submitted to Physical Review Letters

UCRL-20579
Preprint

UNIVERSITY OF CALIFORNIA

Lawrence Radiation Laboratory
Berkeley, California

AEC Contract No. W-7405-eng-48

A JOSEPHSON JUNCTION AMPLIFIER

John Clarke* and James L. Paterson

May 1971

37

A JOSEPHSON JUNCTION AMPLIFIER

John Clarke* and James L. Paterson

Department of Physics, University of California and
Inorganic Materials Research Division, Lawrence Radiation
Laboratory, Berkeley, California 94720

Positive feedback has been used within a double Josephson junction quantum interferometer to achieve a current amplification of up to 100.

The superconducting quantum interferometer[1] consists of two Josephson[2] junctions mounted on a superconducting ring. The critical current (i_c) of the interferometer is an oscillatory function of the magnetic flux applied to it, the period being one flux quantum, ϕ_o. This device has been the basis of several instruments, such as the dc Squid[3] and the Slug,[4] which measure magnetic fields and electric currents and voltages. A current, and hence a voltage, may be measured by passing it through a coil coupled to the interferometer.

The instrument is often used as a sensor in a feedback system. In this procedure, the interferometer is operated on the steepest portion of the critical current oscillation, where the change in critical current for a given change in applied magnetic flux is a maximum. Operated in this mode, the interferometer does not have a significant amount of current amplification. Suppose a single-turn loop of inductance L is perfectly coupled to the interferometer, which also has an inductance L. The current amplification is defined as the ratio of the change in critical current to the change in current in this loop.

The current change in the loop required to produce one-half an oscillation in critical current is just $\phi_o/(2L)$. The greatest possible change in the critical current (i.e., the greatest modulation depth) is ϕ_o/L.[5] The highest obtainable value of current gain is therefore $(\phi_o/L)/(\phi_o/2L) = 2$. In practice, because the modulation depth may be less than ϕ_o/L, or because the loop and interferometer may be imperfectly coupled, the gain is usually somewhat less than 2.

We have used positive feedback within the interferometer to achieve a current amplification of up to 100; in theory the gain is unlimited. The principle of the feedback technique is indicated in Fig. 1(a), in which two identical Josephson junctions, A and B, each capable of supporting a maximum supercurrent i_m, are mounted on a superconducting ring. A magnetic flux is applied to the ring either from an external source or, alternatively, by means of a current (I) in the upper arm of the interferometer of Fig. 1(a). This arm has an inductance L_I, and the flux generated is $\phi_A = L_I I$. The current flowing through the junctions (i) can be fed into the loop at an arbitrary point a and extracted at an arbitrary point b. If the current feed is completely symmetric, i divides in such a way that it does not contribute any net flux to the loop. If a and b are asymmetric, however, i does generate a net flux in the loop. Suppose that a small magnetic flux is applied to the ring so that the critical current changes. If the change in critical current produces a flux in the interferometer that is in the same direction as the applied flux, the feedback will be positive, whereas if the flux opposes the applied flux, the feedback will be negative. As a result, the critical current oscillations will be asymmetric. The

steeper slope corresponds to positive feedback.

The parameter α describes the asymmetry of the current feed (see Fig. 1(a)). For the symmetric case, $\alpha = 0.5$, whereas for maximum asymmetry, where i enters at a' and leaves at b' in Fig. 1(a), $\alpha = 1.0$ (we neglect the junction inductances). The total flux (ϕ_T) in the interferometer is, for arbitrary α,

$$\phi_T = \phi_A + \alpha L i_B - (1 - \alpha) L i_A, \tag{1}$$

where[8]

$$i = i_A + i_B = i_m \sin\delta_A + i_m \sin\delta_B. \tag{2}$$

Here, ϕ_A is the applied flux, i_m is the critical current of each junction, and δ_A and δ_B are the gauge-invariant phase differences in the superconducting order parameter across junctions A and B respectively. The two phase differences are related by the equation[8]

$$\delta_A - \delta_B = 2\pi\phi_T/\phi_o. \tag{3}$$

Eqs. (1)-(3) have been used to determine the critical current as a function of ϕ_A for given values of α, L, and i_m. It is convenient to introduce the dimensionless parameters $j_c = i_c/2i_m$, the reduced critical current, and $\beta = 2Li_m/\phi_o$, the degree of feedback.

Fig. 2(a) shows the variation of j_c with reduced applied flux, $\phi_A/\phi_o = L_I I/\phi_o$, for $\beta = 20$, and various values of α. As α is increased from 0.5 to 1.0, the oscillation becomes more and more skewed, and the gain of the interferometer, which is proportional to the slope, increases by a factor of about 10. On the right hand ordinate we show the change in critical current (Δi_c) in reduced units $\Delta i_c/(\phi_o/L)$. The reduced

modulation depth ($\Delta i_{cmax} L/\phi_o$) for $\beta = 20$ is about 0.86 and is independent of α. In Fig. 3(a) we show the effect of increasing β for $\alpha = 1$. The degree of skewing increases as β increases and the steepest slope is in fact approximately equal to β in the limit of large β. In theory, then, we can achieve arbitrarily high values of amplification. Notice that as $\beta \to \infty$, the modulation depth tends to its limiting value ϕ_o/L.

Fig. 1(b) shows the configuration of an experimental thin-film interferometer, each junction being a Pb-Cu/Al-Pb (SNS) junction.[9] An 8000Å strip of lead (Pb 1) was evaporated on to a glass substrate, and then an insulating layer of SiO in which two narrow regions were masked off. The third film was a 7000 Å disk of Cu/Al (3% Al). Finally, an 8000 Å strip of lead (Pb2) was deposited. The interferometer thus consisted of two junctions, A and B, connected by two sections of the lead strips. Thin film junctions were used because a high degree of asymmetry ($\alpha \simeq 1$) could be achieved easily. SNS junctions were chosen first, because their high reproducibility insured that the two junctions would be nearly identical, and second, because their critical currents increase rapidly as the temperature is lowered, so that β can be varied over a wide range for a given interferometer. Each junction had an area of about 2.5×10^{-4} cm^2, a critical current (i_m) at 4.2K of typically 1mA, and a resistance of about 2×10^{-6} Ω.

A potentiometer (outside the cryostat) was connected across the two ends of each lead strip, and the current through the junctions (i) was applied to the two sliders. The value of α could therefore be controlled by adjusting the two potentiometers. A magnetic flux was applied by means of an additional current, I, in the upper lead strip (Pb2). This strip was about ten times narrower than the lower one (Pb 1), and

therefore contributed about 10/11 of the interferometer inductance, which was estimated to be approximately 2×10^{-11} H. The critical current was measured by adjusting the dc current (i) to be just above the critical value, so that a dc voltage (v) was developed across the junctions. A critical current change, δi_c, gave rise to a voltage change $\delta v \approx R\delta i_c$, where R is the parallel resistance of the junctions ($\sim 10^{-6}\Omega$). This voltage was monitored by means of a superconducting voltmeter.[4]

The measured period in I of the critical current was roughly 100 μA, corresponding to an interferometer inductance of 2×10^{-11} H. This result is in good agreement with the calculated value. Experimental plots of j_c and $\Delta i_c L/\phi_o$ against $\phi_A/\phi_o = L_I I/\phi_o$ are shown in Fig. 2(b) for $\beta = 22$ and for several values of α. The curves are in good agreement with the theoretical ones, except that the modulation depth varies somewhat with α. The same variation occurs in Fig. 3(b) where we plot $\Delta i_c L/\phi_o$ against $L_I I/\phi_o$ for several values of β, with $\alpha \simeq 1$. We conjecture that effects arising from the single junction diffraction envelope are the most likely cause of this variation.

We have attempted to determine the noise level that limits the current resolution of our device. The changes in critical current must of course be determined with the junctions in a finite voltage regime. In this state, the junctions will induce a noise current in the interferometer that will set a lower limit on the value of I which may be detected. We measured the noise current, using a current bias supplied from a high impedance source. With $\beta \sim 60$ and $T \sim 1.5$ K, we obtained a value of 10^{-8} A (± 50%) in a 1 Hz bandwidth. The junctions in this experiment were of smaller area than usual, and each had a resistance of about $1.5 \times 10^{-5}\ \Omega$. Dahm et al.[10] have shown that the

spectral density for the current noise in a tunnel junction in the limit $eV \ll kT$ is $S_I(\omega) = 2kT/(\pi R_S)$, where R_S is the static resistance (v/i) of the junction. Kanter and Vernon[11] found that this result was approximately correct for point contacts. In the present case, the noise measurement was made with a current bias of 4mA (2mA per junction) and a voltage of about 1 nV, so that $R_S \simeq 5 \times 10^{-7}\ \Omega$ per junction. This value of R_S leads to a noise current of 9×10^{-9} A in a 1 Hz bandwidth. The good agreement between theory and experiment is perhaps fortuitous, and further measurements are being made.

The results achieved so far with the asymmetric interferometer do not constitute an improvement in the state-of-the art measurement of magnetic field or current. The current noise associated with the junctions is high because the junction resistance is low. In addition, the requirement of a second quantum interference device (Slug) to measure the changes in critical current makes the system impracticable as an instrument. However, both problems may be overcome with a junction whose resistance (R) is approximately 1 Ω. The noise current should be reduced to about 10^{-11} A/$\sqrt{\text{Hz}}$. If $\beta \sim 100$, the voltage output of the device ($\sim R\delta i_c$) will be roughly 10^{-9}V for an input of 10^{-11} A. This voltage is detectable with a room temperature amplifier in conjunction with a cooled transformer, so that the system would be limited by the junction noise.

Finally, the asymmetric quantum interferometer may be viewed as a three-terminal device with current amplification. In principle, the device may be used in any configuration possible for a conventional transistor. A voltage amplifier is shown in Fig. 4(a). The voltage gain is

approximately $\beta(R/R_i)$, where R is the junction resistance, and R_i the input resistance. The power gain is $\beta^2(R/R_i)$. Magnetic field measurements are made by connecting the input circuit into a superconducting loop to which the field is applied. A flux amplifier may be realized by biasing the junctions from a constant voltage source, in series with an inductance (see Fig. 4(b)). The flux gain is approximately $\beta(L_o/L_i)$, where L_i and L_o are the inductances of the input and output loops respectively. The output coil may be multi-turn, so that high values of amplification are attainable.

We are grateful to Dr. J. P. Walter for performing the computer calculations leading to Figures 2(a) and 3(a). This work was performed under the auspices of the U. S. Atomic Energy Commission.

* Alfred P. Sloan Foundation Fellow.

1. R. C. Jaklevic, J. Lambe, A. H. Silver, and J. E. Mercereau, Phys. Rev. Letters 12, 159 (1964).
2. B. D. Josephson, Phys. Letters 1, 251 (1962).
3. J. E. Zimmerman and A. H. Silver, Phys. Rev. 141, 367 (1966).
4. J. Clarke, Phil. Mag. 13, 115 (1966).
5. The modulation depth $\rightarrow \phi_o/L$ as $Li_c/\phi_o \rightarrow \infty$. See Refs. 3 and 4.
6. J. Clarke and T. A. Fulton, J. Appl. Phys. 40, 4470 (1969).
7. T. A. Fulton, Solid State Comm. 8, 1353 (1970).
8. See, for example, B. D. Josephson, in Superconductivity, Edited by R. D. Parks, (Marcel Dekker, N.Y., 1969).
9. J. Clarke, Proc. Roy. Soc. A308, 447 (1969).
10. A. J. Dahm et al., Phys. Rev. Letters 22, 1416 (1969).

11. H. Kanter and F. L. Vernon Jr., Phys. Rev. Letters 25, 588 (1970).

Fig. 1(a). Schematic of double junction interferometer, with junctions A and B. The current i is fed asymmetrically into the ring at the points a and b. The signal current, I, induces a flux $L_I I$ into the ring. (b) Experimental quantum interferometer (dimensions in cm).

Fig. 2. Variation of reduced critical current (j_c) with reduced applied magnetic flux ($L_I I/\phi_o$) for several values of α: (a) theory, $\beta = 20$; (b) experiment, $\beta = 22$.

Fig. 3. Variation of reduced change in critical current ($\Delta i_c L/\phi_o$) with reduced applied magnetic flux ($L_I I/\phi_o$) for $\alpha = 1$ and various values of β: (a) theory; (b) experiment.

Fig. 4. Asymmetric interferometer used as (a) voltage amplifier; (b) magnetic flux amplifier. V represents a constant voltage bias.

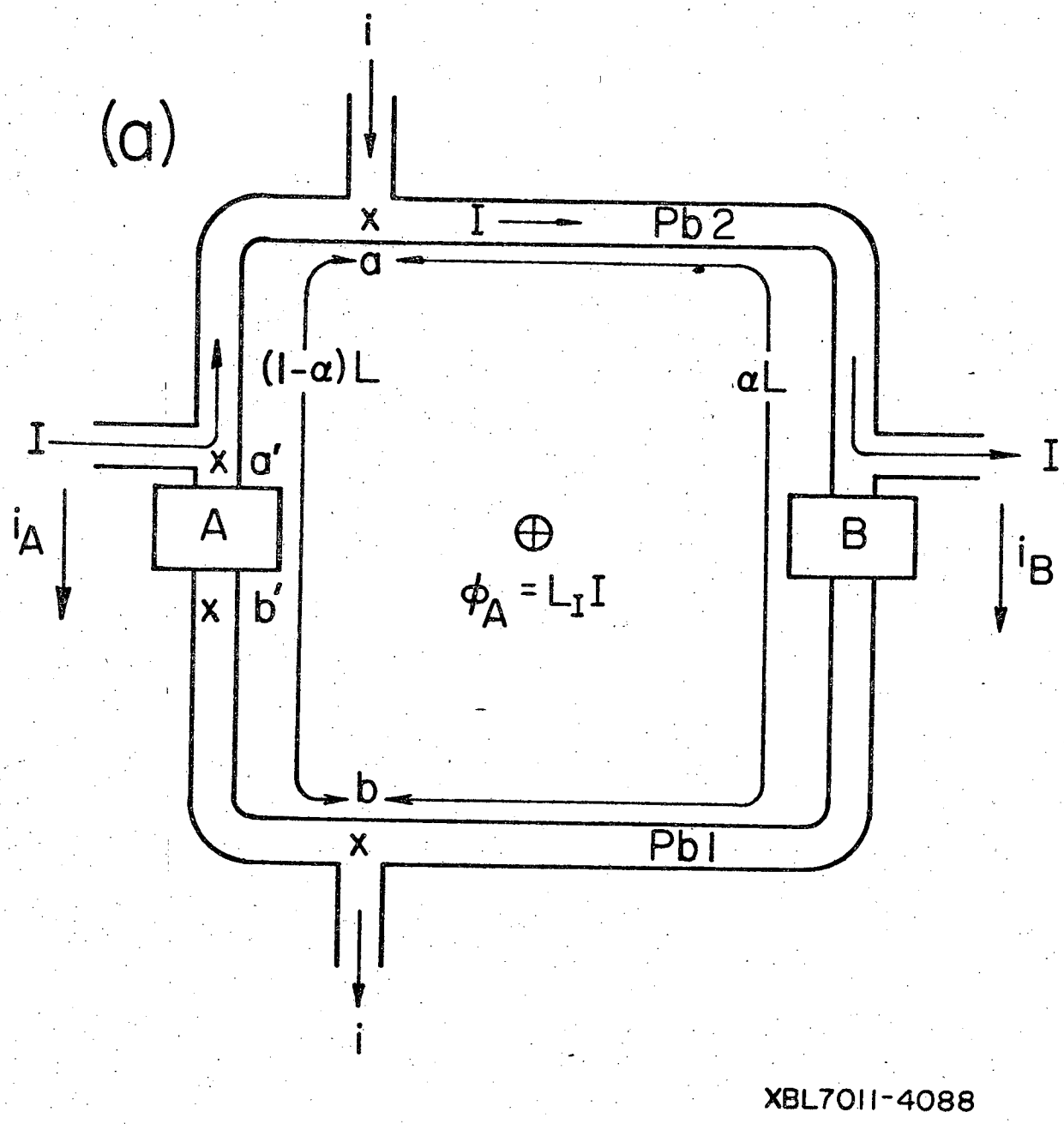

Fig. 1(a)

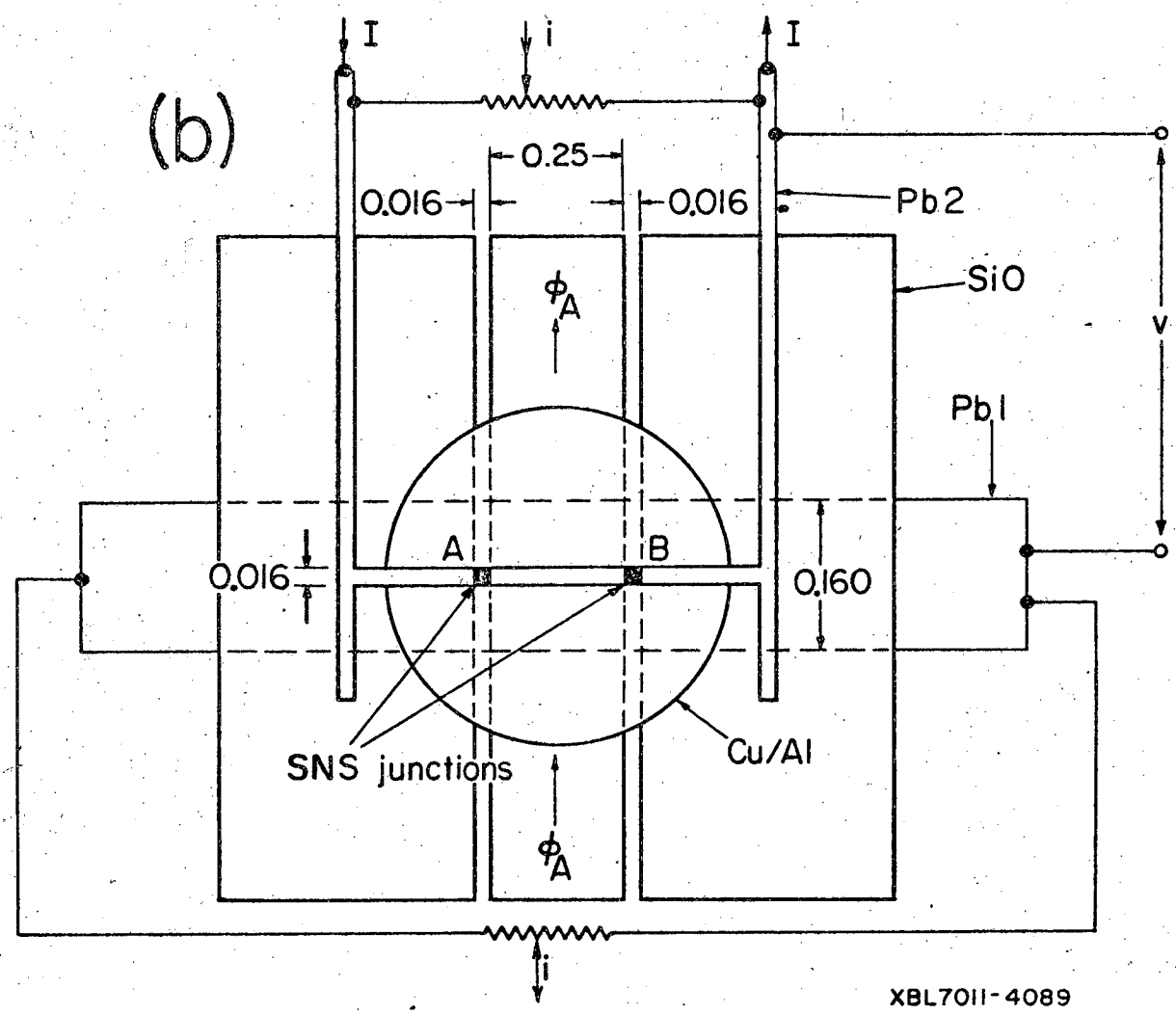
(b)
I
i
I
0.25
0.016
0.016
Pb2
SiO
ϕ_A
V
Pb1
A
B
0.016
0.160
SNS junctions
Cu/Al
ϕ_A
i
XBL7011-4089

Fig. 1(b)

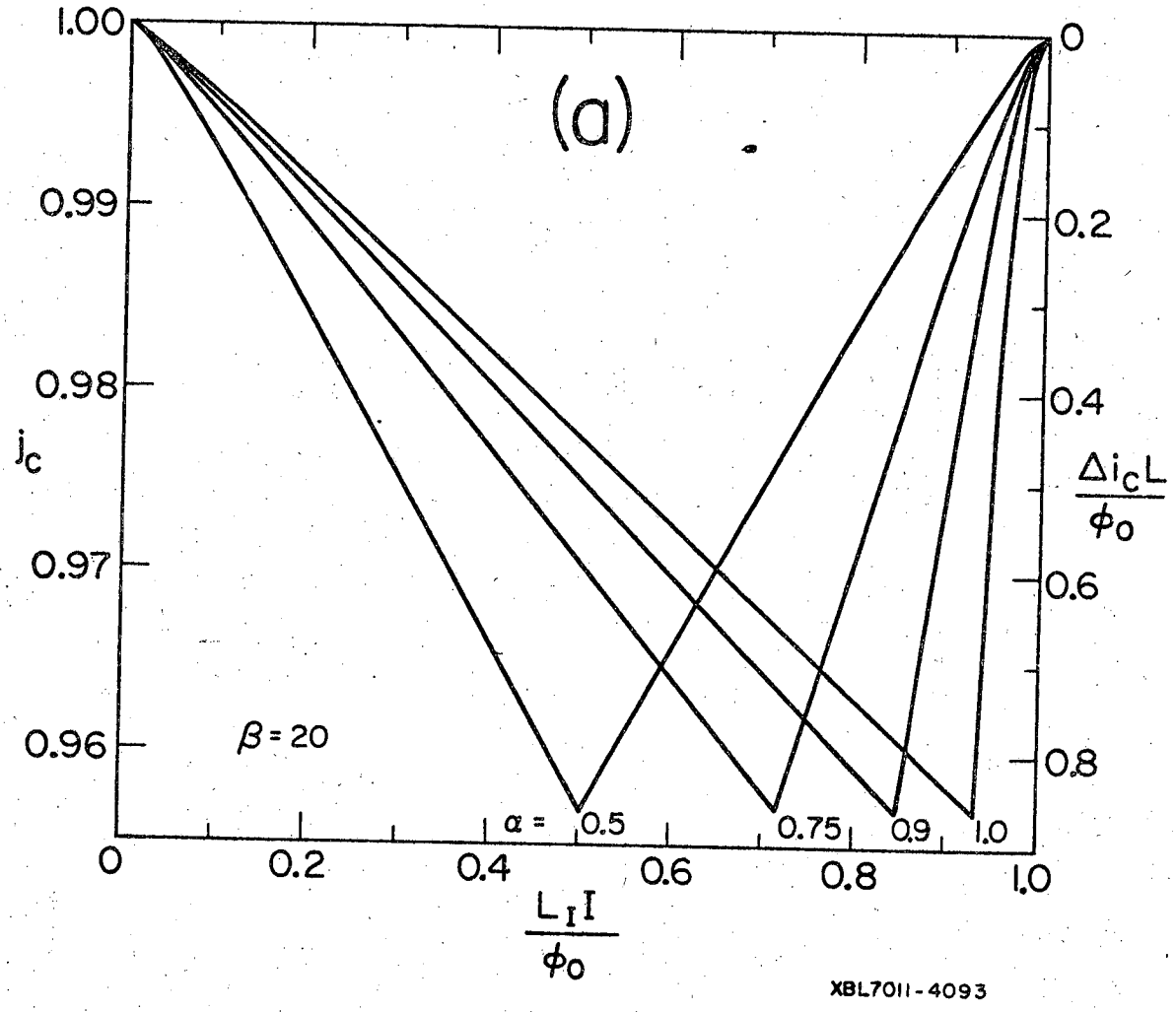
(a)
1.00
0.99
0.98
0.97
0.96
j_c
0
0.2
0.4
0.6
0.8
1.0
$\frac{\Delta i_c L}{\phi_0}$
$\beta = 20$
$\alpha =$ 0.5
0.75
0.9
1.0
0
0.2
0.4
0.6
0.8
1.0
$\frac{L_I I}{\phi_0}$
XBL7011-4093

Fig. 2(a)

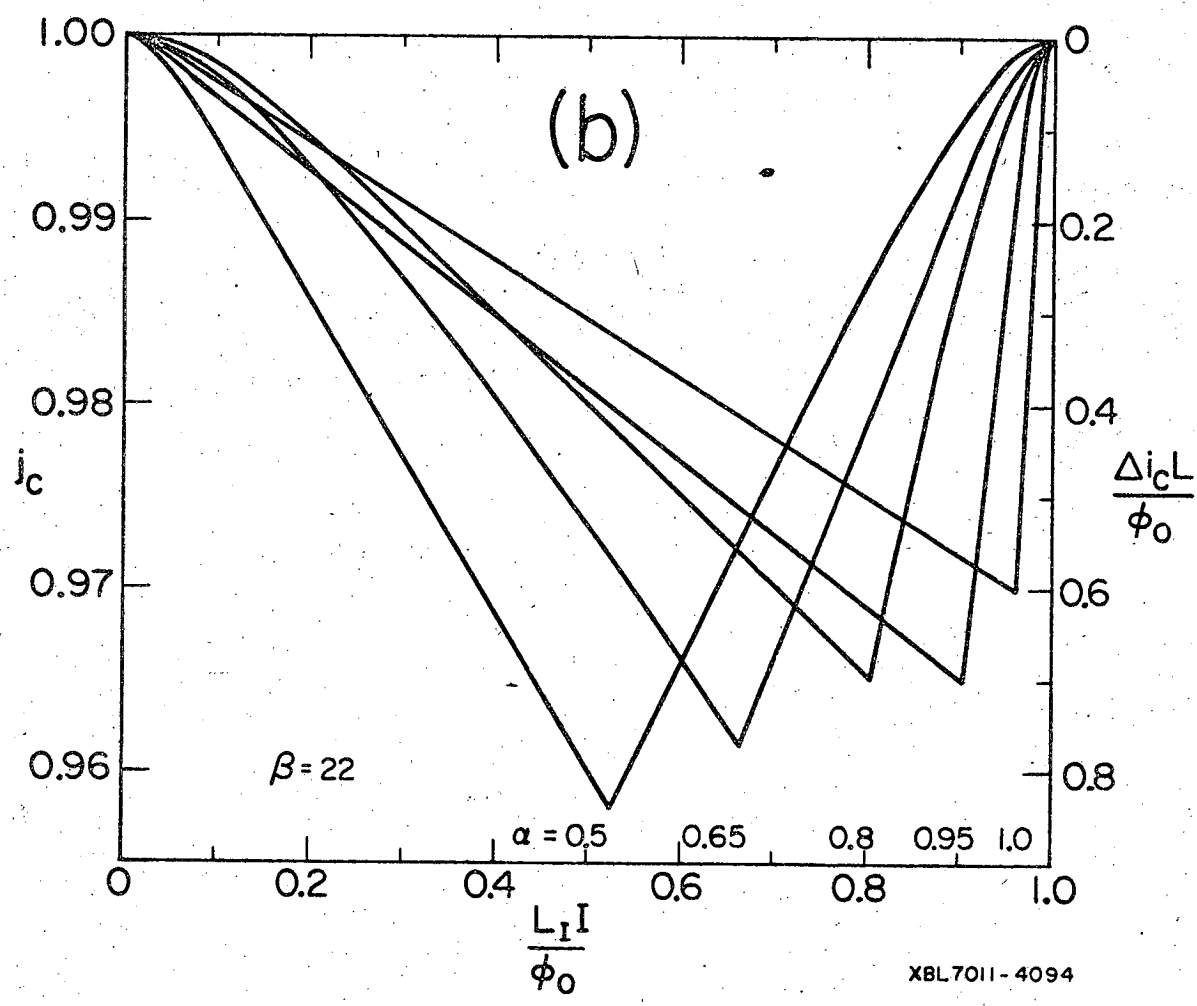
(b)
1.00
0.99
0.98
0.97
0.96
j_c
0
0.2
0.4
0.6
0.8
$\frac{\Delta i_c L}{\phi_0}$
$\beta = 22$
$\alpha = 0.5$
0.65
0.8
0.95
1.0
0
0.2
0.4
0.6
0.8
1.0
$\frac{L_I I}{\phi_0}$
XBL7011-4094

Fig. 2(b)

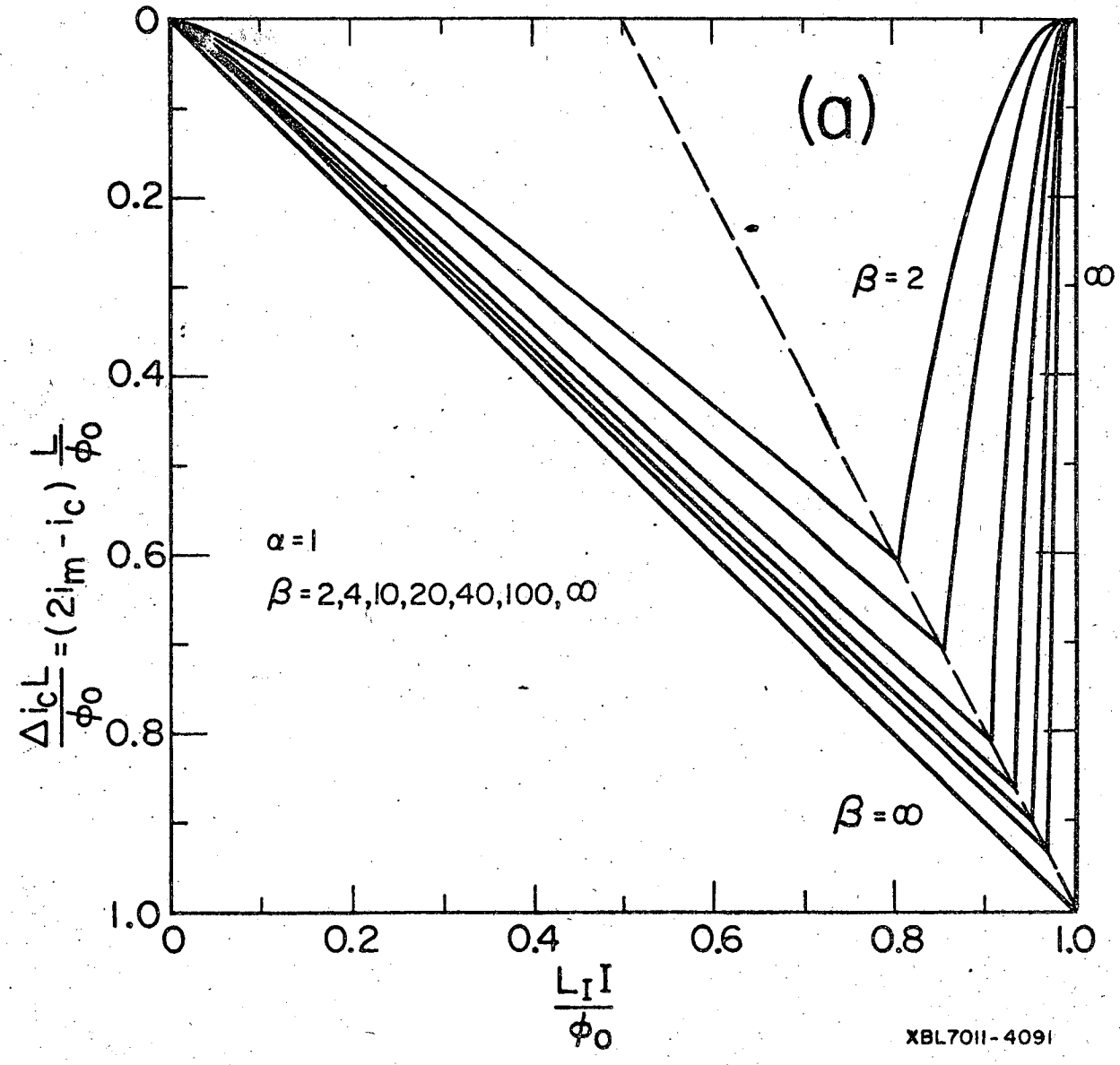
(a)
β = 2
∞
α = 1
β = 2,4,10,20,40,100,∞
β = ∞
0
0.2
0.4
0.6
0.8
1.0
$\frac{\Delta i_c L}{\phi_0} = (2i_m - i_c)\frac{L}{\phi_0}$
$\frac{L_I I}{\phi_0}$
XBL7011-4091

Fig. 3(a)

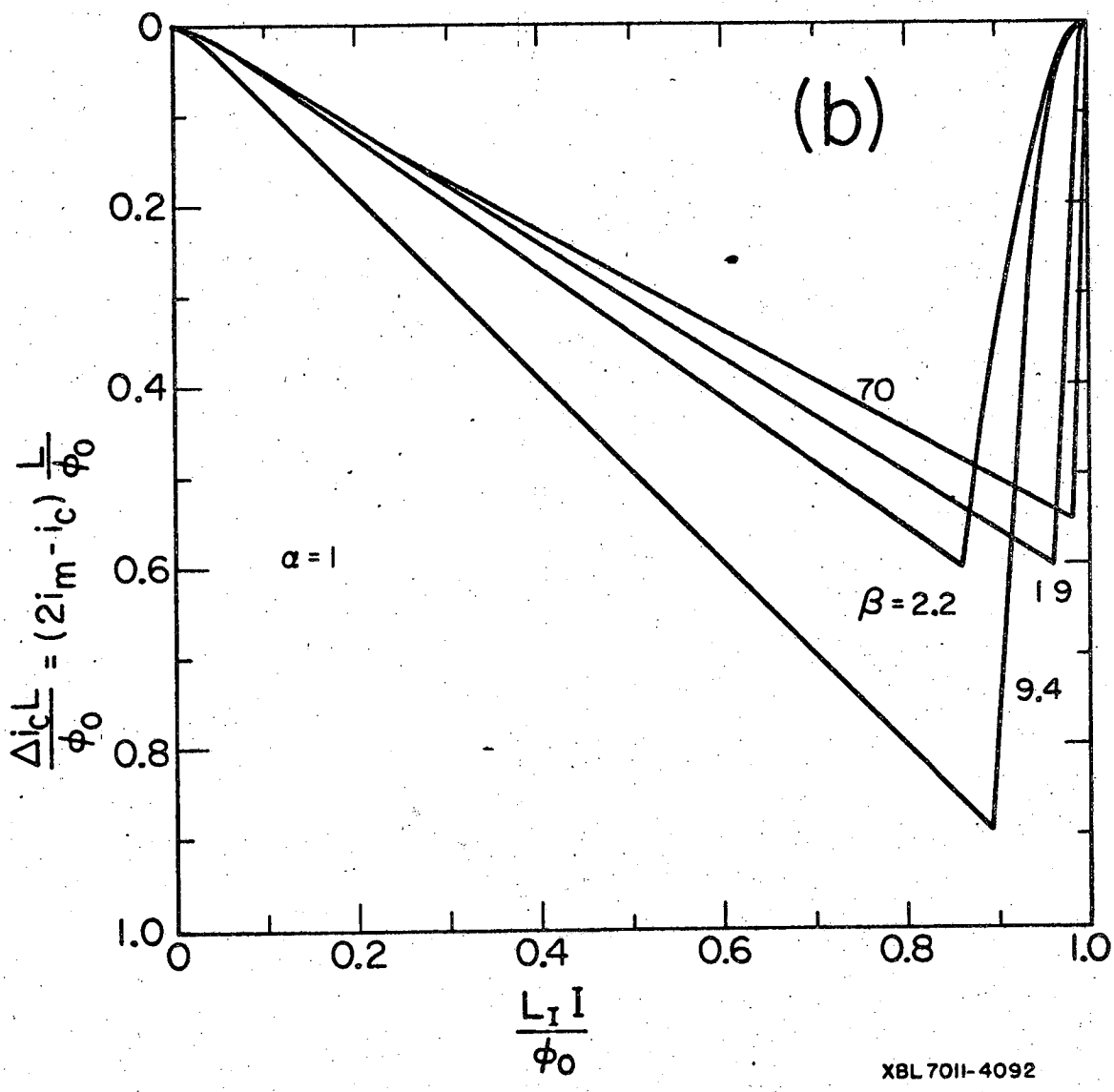
(b)
0
0.2
0.4
0.6
0.8
1.0
0
0.2
0.4
0.6
0.8
1.0
70
19
9.4
β = 2.2
α = 1
$\frac{\Delta i_c L}{\phi_0} = (2i_m - i_c)\frac{L}{\phi_0}$
$\frac{L_I I}{\phi_0}$
XBL 7011-4092

Fig. 3(b)

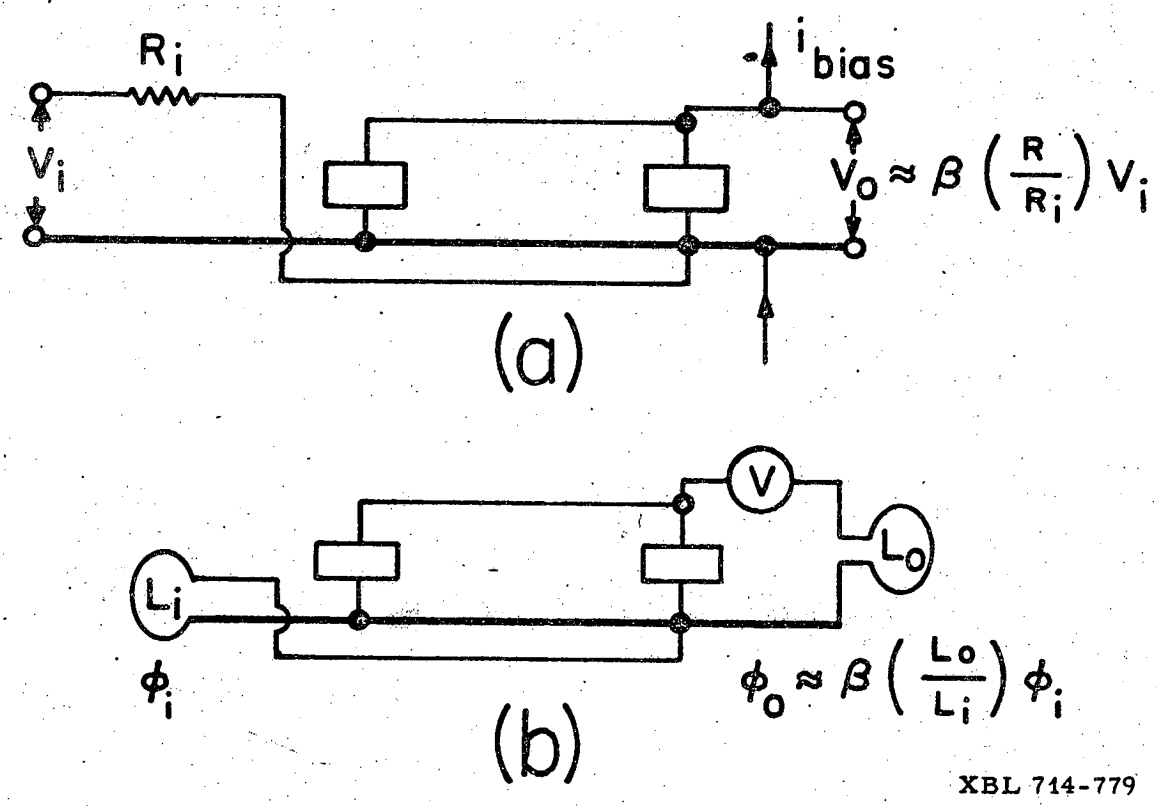

XBL 714-779

Fig. 4