Submitted to
Physical Review

L. Yu

UCRL-20610
Preprint

c.2

RECEIVED
LAWRENCE
RADIATION LABORATORY

LIBRARY AND
DOCUMENTS SECTION

A SIMPLE PARTON DUAL RESONANCE MODEL FOR ELECTROPRODUCTION AND LEPTON-PAIR ANNIHILATION PROCESSES WITH THE INCORPORATION OF FINAL-STATE INTERACTION

Loh-ping Yu

March 25, 1971

AEC Contract No. W-7405-eng-48

TWO-WEEK LOAN COPY

This is a Library Circulating Copy which may be borrowed for two weeks. For a personal retention copy, call Tech. Info. Division, Ext. 5545

34a

DISCLAIMER

This document was prepared as an account of work sponsored by the United States Government. While this document is believed to contain correct information, neither the United States Government nor any agency thereof, nor the Regents of the University of California, nor any of their employees, makes any warranty, express or implied, or assumes any legal responsibility for the accuracy, completeness, or usefulness of any information, apparatus, product, or process disclosed, or represents that its use would not infringe privately owned rights. Reference herein to any specific commercial product, process, or service by its trade name, trademark, manufacturer, or otherwise, does not necessarily constitute or imply its endorsement, recommendation, or favoring by the United States Government or any agency thereof, or the Regents of the University of California. The views and opinions of authors expressed herein do not necessarily state or reflect those of the United States Government or any agency thereof or the Regents of the University of California.

A SIMPLE PARTON DUAL RESONANCE MODEL FOR ELECTROPRODUCTION AND LEPTON-PAIR ANNIHILATION PROCESSES WITH THE INCORPORATION OF FINAL-STATE INTERACTION*

Loh-ping Yu

Lawrence Radiation Laboratory
University of California
Berkeley, California 94720

March 25, 1971

ABSTRACT

A new convergent, nonperturbative parton (straton) dual resonance model for deep inelastic eN and high-energy e^+e^- production processes is proposed. The model incorporates the parton's final-state interaction effects and resolves the puzzle why the parton is not observed experimentally. It does not require "cut-off" of any sort, and automatically furnishes explicit formulas for the structure functions νW_2 and W_1 over the whole range of the scaling variable ω between 0 and ∞. The explicit formula for νW_2, apart from a non-scaling factor of $\ln^{-1}|q^2|$, correctly reproduces the regge limit ($\omega \to \infty$), the "fixed angle" limits ($\omega \to 1 \pm \epsilon$, ϵ finite), and the threshold behaviors ($\omega \to 1^{\pm}$) in connection with the asymptotic nucleon form factors. For the e^+e^- annihilation process, it further predicts the pionization (nucleonization) limit as $\omega \to 0$. We also suggest that the final-state interaction is of diffractive type (Pomeron exchange); and if the straightforward extrapolation of the Veneziano formula to the off mass shell makes sense, the final-state interaction breaks the scaling law by the factor $(a + b \ln|q^2|)^{-1}$.

I. INTRODUCTION

Two of the most interesting theoretical ideas, in recent years, are the recognition of the duality concept in strong interaction on one hand, and the emergence of the parton idea in the deep inelastic eN scattering on the other. The original contents of the parton idea[1] are: (a) its point-like interaction with heavy virtual light quanta, and (b) that the hadron is made of an incoherent sum of partons (in infinite momentum frame).

The latter assumption (b), though intuitively simple, is, however, incompatible with the duality concept, since we need parton-parton interaction to manifest the duality. Indeed, the physical picture of the parton-parton interaction satisfying duality has been pushed forth recently in the "parton-dual view"[2] or the "fishnet diagrams"[3] interpretations of the dual resonance model. Quite independent of this, Bloom and Gilman[4] have further suggested that a substantial part of the scaling curves for the structure functions are in fact built up from resonances. All of these suggest that the dual resonance model[5] should be capable of describing the salient features of the electroproduction data in SLAC.

Based on the original parton idea, several models for deep-inelastic eN scattering and/or high-energy e^+e^- colliding beam scattering have been proposed.[6] However, because none of these models have taken into account the important final-state interaction effects among the partons,[7] one immediately faces the puzzle: What is a parton? Why is the parton not observed experimentally?

Here, we take a completely different point of view. We appeal to the experimental fact that the parton <u>is not</u> observed, we assume that the partons are tightly bounded inside the hadron, and that the

parton-parton interaction is strong. In other words, we assume that the parton, which absorbs the heavy virtual light quantum, must enjoy very strong final-state interaction with the rest of the partons inside the hadron, so that it is not observed. We thus propose a six-point function model for the virtual forward Compton scattering, shown in Fig. 2a, of which the imaginary part in $s = (P + q)^2$ yields the structure functions. The dotted line in Fig. 2a indicates the correct imaginary part one should take. Figure 2b shows the fishnet structures of the hadron, and Figs. 2c-f are the duality diagrams of Fig. 2a (imaginary parts are understood).

In this model, the whole idea of a parton becomes a mathematical device only, i.e., its mediation between the electromagnetic interaction and the strong interaction through its point-like coupling with the virtual photon. We use the standard six-point Veneziano formula (four legs off shell) to describe the strong interaction part of the process. We state our assumptions:

(a) hadron is made of partons that are tightly bound inside the hadron,

(b) the character of the parton is its point-like coupling with the heavy virtual photon,

(c) the high-energy parton decays[8] by bremsstrahlung into sum of partons through parton-parton interaction,

(d) the parton, which absorbs the high-energy virtual photon, must suffer very strong final-state interactions with the remaining partons, so that it is not observed, and

(e) assume the six-point Veneziano formula is allowed to go off mass-shell in a straightforward way.

The final-state interaction assumption (d), is crucial in our model. It turns out that the final-state interaction, besides breaking the scaling law by a factor of $(a + b\,\ln|q^2|)^{-1}$, also requires the parton-parton channel (not the usual t channel) to have unity regge intercept. This could mean that the final-state interaction might be diffractive in nature. The point-like interaction, assumption (b), leads to the physical picture of the heavy virtual photon: <u>a heavy virtual photon behaves like a parton-antiparton pair when it participates in the strong interactions</u>. Finally, the off-shell Veneziano formula, assumption (e), has extremely interesting consequences when generalized to detect one more hadronic final-state particle. It yields predictions for the lepton-hadronic inclusive process, analogous to the pure-hadronic inclusive experiments.[9] It further gives definite predictions for massive lepton-pair production process.[10] These results will be shown elsewhere.

II. FORMULATION OF THE PARTON DUAL RESONANCE MODEL

We specify the kinematics as shown in Fig. 1. The virtual photon, of mass q^2, energy ν, is point-like coupled to a pair of off-shell partons, which then participate in strong interaction with the target hadron (nucleon) of momentum P, and results in producing anything of invariant mass square $s = (P + q)^2$.

Our starting point is to set up an off-shell six-point dual resonance model for the spin-averaged virtual forward Compton scattering amplitude $T_{\mu\nu}$ (Fig. 2a). We first go to the asymptotic region $s \to -\infty$, $q^2 \to -\infty$, where the six-point function converges nicely, and obtain an asymptotic form for $T_{\mu\nu}$. Then we keep q^2 fixed, and analytically continue s to the $+\infty \pm i\epsilon$ region where $T_{\mu\nu}$ has a cut for $s > P^2$. Take its imaginary part in s, we thus obtain explicit formulas for νW_2 and W_1 of electroproduction. Then again we keep s fixed at $+\infty$ and analytically continue q^2 (in νW_2 and W_1) into the $q^2 \to +\infty \pm i\epsilon$ region, and thus we enter the physical region of e^+e^- process (see the dotted lines in Fig. 3).

We write down the spin-averaged, virtual forward Compton scattering amplitude corresponding to Fig. 2a or Fig. 2c:

$$T^{(i)}_{\mu\nu} = \int d^4k_2\, d^4k_5 \frac{K^{(i)}_{\mu\nu}\, \tilde{B}_6(k_1,k_2,P,-P,k_5,k_6)}{(k_1^2 - m^2)(k_2^2 - m^2)(k_5^2 - m^2)(k_6^2 - m^2)}, \tag{1}$$

where m is the mass of the partons; $k_1 = q - k_2$, $k_6 = -q - k_5$, and

$$K^{(i)}_{\mu\nu} = \begin{cases} -(2k_2 - q)_\mu (2k_5 + q)_\nu, & \text{for spin-zero partons } (i = 1), \quad (2a) \\ \dfrac{1}{(4m)^2} \mathrm{Tr}[(\not{k}_2 + m)\gamma_\mu(-\not{k}_1 + m)(\not{k}_6 + m)\gamma_\nu(-\not{k}_5 + m)], & \text{for spin-}\tfrac{1}{2}\text{ partons } (i = 2). \quad (2b) \end{cases}$$

We mention that the spin-$\frac{1}{2}$ case $(i = 2)$ is the multiplicative quark model proposed by Mandelstam, Bardakci, and Halpern.[11] We show in Appendix A that Eq. (2b) reduces to

$$K^{(2)}_{\mu\nu} = -(2k_2 - q)_\mu (2k_5 + q)_\nu + q^2 \left(g_{\mu\nu} - \frac{q_\mu q_\nu}{q^2} \right). \tag{2c}$$

The four legs off-shell six-point dual amplitude, in its standard form, is

$$\tilde{B}_6 = \int_0^1 \frac{dx\,dy\,dz}{(1 - xz)(1 - yz)} (xy)^{-\alpha_{12}(q)-1} z^{-\alpha_{123}(s)-1}$$
$$\times \left(\frac{1 - x}{1 - xz}\right)^{-\alpha_{23}(k_2+P)-1} \left(\frac{1 - y}{1 - yz}\right)^{-\alpha_{45}(k_5-P)-1} \left(\frac{1 - xz}{1 - xyz}\right)^{-\alpha_{234}(k_2)-1}$$
$$\times \left(\frac{1 - yz}{1 - xyz}\right)^{-\alpha_{345}(k_5)-1} \left[\frac{1 - z)(1 - xyz)}{(1 - xz)(1 - yz)}\right]^{-\alpha_{34}(0)-1}$$
$$\times (1 - xyz)^{-\alpha_{16}(k_2+k_5)-1} \left[\frac{x(1 - x)(1 - yz)}{y(1 - y)(1 - xz)}\right]^{i\epsilon}. \tag{3}$$

In Eq. (3), the invariant variables s, q^2 on the left-hand side (legs 1,2,3) must be analytically continued in opposite directions[12] with respect to those on the right-hand side (legs 4,5,6), due to the optical theorem for the cross section.[12] This is symbolized by the $i\epsilon$-prescription.[12] We mathematically distinguish the parton legs 1,2,5,6 from the hadron legs 3,4 by assigning the following different intercepts: the parton-parton channel has intercept α_{16}, the parton-hadron channel has intercept α_{23} $(=\alpha_{45})$, the parton-hadron-antihadron channel, α_{234} $(= \alpha_{345} = \alpha_{23})$, the hadron-hadron channel (the usual

t channel), α_{34} ($= \alpha_t$), and the photon channel, α_{12} ($= \alpha_{56}$). Physically, the parton legs 1,2,5,6 are distinct from the hadron legs 3,4 by their point-like couplings with the virtual photons, and that they are off-shell particles, i.e., field theoretical particles.

We now substitute Eqs. (2), (3) in Eq. (1) and explicitly carry out the two loop-momentum integrations (see Appendix B), hence obtain Eq. (B.3). We then take the asymptotic limit $s \to -\infty$, $q^2 \to -\infty$, in Eq. (B.3), but keep the scaling variable ω fixed,

$$\omega \equiv \frac{2P\cdot q}{-q^2} = 1 - \frac{s - P^2}{q^2} . \tag{4}$$

It can be shown that if ω is fixed at values less than unity, the important contributions in Eq. (B.3) then come from the region where $\ln \frac{1}{x}$, $\ln \frac{1}{y}$, $\ln \frac{1}{z}$, a_1, a_6 are small. We thus make the scale transformation

$$\begin{aligned} \ln \frac{1}{x} &= \rho\beta_1, \\ \ln \frac{1}{y} &= \rho\beta_2, \\ \ln \frac{1}{z} &= \rho\beta_3, \end{aligned} \tag{5}$$

and expand everything else in terms of ρ, β_1, β_2 and β_3. Then the coefficient of q^2 in Eq. (B.3) reduces to

$$\left\{\rho[\beta_1 + \beta_2 + (1 - \omega)\beta_3] + (a_1 + a_6)\left[1 - \frac{\omega \ln \frac{(\beta_1+\beta_3)(\beta_2+\beta_3)}{\beta_1\beta_2}}{a_2+a_5+\ln \frac{(\beta_1+\beta_2+\beta_3)^2}{\beta_1\beta_2}}\right]\right\} . \tag{6}$$

Now comes the critical step, due to the crucial assumption (d) in Sec. II. We note that, in the expression (6), there are two terms involving ω, the first one, $(1 - \omega)$, is from $s = +q^2(1 - \omega)$, and the second one in [ ], is from the loop integrations. Since later on we only want to take the imaginary part cut across the resonances, but not across the partons (nonobservable), we have to[13] separate out these two ω's. The <u>unique</u> way to do this is by making the transformation on a_1, a_6:

$$\begin{aligned} a_1 &= a_1'/E \\ a_6 &= a_6'/E, \end{aligned} \tag{7}$$

where

$$E = 1 - \omega \ln\left[\frac{(\beta_1 + \beta_3)(\beta_2 + \beta_3)}{\beta_1\beta_2}\right]\left[a_2 + a_5 + \ln \frac{(\beta_1+\beta_2+\beta_3)^2}{\beta_1\beta_2}\right]^{-1} . \tag{8}$$

The expression (6) becomes

$$\{\rho[\beta_1 + \beta_2 + (1 - \omega)\beta_3] + a_1' + a_6'\}. \tag{9}$$

We then complete the scale transformation by setting

$$\begin{aligned} a_1' &= \rho\beta_4, \\ a_6' &= \rho(1 - \beta_1 - \beta_2 - \beta_3 - \beta_4). \end{aligned} \tag{10}$$

After the scale transformation, and performing the integration over ρ, we obtain Eq. (B.11). Equation (B.11) will yield scaling invariant structure functions (apart from $\ln |q^2|$), only if $\alpha_{16} \equiv 1$.

Putting $\alpha_{16} \equiv 1$ in Eq. (B.11), we obtain

$$T^{(i)}_{\mu\nu} \underset{\substack{s\to -\infty \\ q^2\to -\infty \\ \alpha_{16}\equiv 1}}{\sim} \int_0^\infty da_2 \int_0^\infty da_5 \int_0^1 d\beta_1 \int_0^{1-\beta_1} d\beta_2 \int_0^{1-\beta_1-\beta_2} d\beta_3$$

$$\times \{G'\}\, \bar{K}^{(i)}_{\mu\nu} \exp(-J') \frac{\pi^4}{(C'E)^2} \frac{1}{|q^2|(1-\omega\beta_3)}, \tag{11}$$

where $\{G'\}$, $\bar{K}^{(i)}_{\mu\nu}$, J', C', E are defined in Eqs. (B.12-16). The asymptotic expression for $T^{(i)}_{\mu\nu}$, Eq. (11), is analytic in ω for $\omega < 1$ (hence in s for $s < P^2$). It has branch cut when $\omega > 1$ (or when $s > P^2$), owing to the positive-definite requirement of Eq. (6) or Eq. (9). We now keep q^2 fixed at $-\infty$ and analytically continue s to[14] $+\infty \pm i\epsilon$, or equivalently to the region $\omega > 1$, and take the imaginary part in s (not in ω). This amounts to replacing the factor $(1-\omega\beta_3)^{-1}$ by $\delta(1-\omega\beta_3)$ in Eq. (11). The β_3 integration then is trivial, and we obtain the structure tensor for the electroproduction $(\omega > 1)$:

$$W^{(i)}_{\mu\nu} \equiv \mathrm{Im}_s\, T^{(i)}_{\mu\nu} \underset{\substack{s\to +\infty \\ q^2\to -\infty \\ \alpha_{16}\equiv 1}}{\sim} \left(\frac{1}{|q^2|\omega}\right) \int_0^\infty da_2 \int_0^\infty da_5 \int_0^1 d\beta_1 \int_0^{1-\beta_1} d\beta_2$$

$$\times\ \theta(1-\beta_1-\beta_2-\tfrac{1}{\omega})\, \{G''\} \frac{\pi^4}{(C''E')^2} \exp(-J'')\, \tilde{K}^{(i)}_{\mu\nu}, \tag{12}$$

where $\{G''\}$, $\tilde{K}^{(i)}_{\mu\nu}$, C'', E', and J'' are defined in Eq. (B.12-17), but with $\beta_3 = \frac{1}{\omega}$.

In order to simplify the final answer, we make change of variables from $\beta_1, \beta_2, a_2, a_5$ to $\alpha_1, \alpha_2, b_2, b_5$:

$$\beta_1 = \frac{1}{\omega}\alpha_1, \qquad \beta_2 = \frac{1}{\omega}\alpha_2,$$
$$b_2 = a_2 + d_2, \quad b_5 = a_5 + d_5, \quad b_2 + b_5 \equiv \alpha; \tag{13}$$

and define d_2, d_5, x, y:

$$d_2 \equiv \ln\left(\frac{1+\alpha_1+\alpha_2}{\alpha_1}\right), \qquad d_5 \equiv \ln\left(\frac{1+\alpha_1+\alpha_2}{\alpha_2}\right),$$
$$x = \ln\left[\frac{(1+\alpha_1)(1+\alpha_2)}{\alpha_1\alpha_2}\right]\Big/\alpha, \tag{14}$$
$$y = \ln\left[\frac{(1+\alpha_1+\alpha_2)^2}{\alpha_1\alpha_2}\right]\Big/\ln\left[\frac{(1+\alpha_1)(1+\alpha_2)}{\alpha_1\alpha_2}\right].$$

Now we quote the explicit forms for $\tilde{K}^{(i)}_{\mu\nu}$:

$$\tilde{K}^{(i)}_{\mu\nu} = \begin{cases} 4x^2(P_\mu + \frac{1}{2x}q_\mu)(P_\nu + \frac{1}{2x}q_\nu) - \frac{2}{\alpha}\left(g_{\mu\nu} - \frac{q_\mu q_\nu}{q^2}\right), & i = 1, \\ 4x^2(P_\mu + \frac{1}{2x}q_\mu)(P_\nu + \frac{1}{2x}q_\nu) + q^2\left(g_{\mu\nu} - \frac{q_\mu q_\nu}{q^2}\right), & i = 2. \end{cases} \tag{15}$$

Equation (15) exhibits the gauge invariance at $x \approx 1$, this will be shown in the next section to correspond to $\omega \approx 1$, i.e., the asymptotic form factor case.

We substitute Eqs. (15), (13), (14) in Eq. (12), and then compare it (near $\omega \approx 1$) with the gauge invariant form of $W^{(i)}_{\mu\nu}$,

$$W^{(i)}_{\mu\nu} \equiv (P_\mu + \tfrac{\omega}{2}q_\mu)(P_\nu + \tfrac{\omega}{2}q_\nu)\frac{W^{(i)}_2}{P^2} - \left(g_{\mu\nu} - \frac{q_\mu q_\nu}{q^2}\right)W^{(i)}_1. \tag{16}$$

We thus identify $F^{(i)}_1$, $F^{(i)}_2$, defined by $W^{(i)}_1 \to F^{(i)}_1$, $\nu W^{(i)}_2 \to F^{(i)}_2$ and hence we get the results given in the following explicit formulas $(1 < \omega < \infty)$:

$$\begin{Bmatrix} F_1^{(1)} \\ F_2^{(1)} \\ F_1^{(2)} \\ F_2^{(2)} \end{Bmatrix} = \pi^4 \int_0^{\omega} d\alpha_1 \int_0^{\omega-\alpha_1} d\alpha_2\, \Theta(\omega - 1 - \alpha_1 - \alpha_2) \int_{d_2+d_5}^{\infty} d\alpha$$

$$\times \frac{(\alpha - d_2 - d_5)}{\left(\frac{\alpha^2}{4} + \alpha\, \ln|q^2|\right)} \begin{Bmatrix} \dfrac{2x}{|q^2|\ln[(1+\alpha_1^{-1})(1+\alpha_2^{-1})]} \\ 2M\omega x^2 \\ 1 \\ 2M\omega x^2 \end{Bmatrix}$$

$$\times \frac{1}{(1-\omega x)^2} \{\tilde{G}\} \operatorname{Exp}(-\tilde{J}) , \tag{17}$$

where

$$\{\tilde{G}\} = \left\{ \frac{(\omega - 1 - \alpha_1 - \alpha_2)}{\alpha_1\alpha_2} \left[\frac{(1+\alpha_1+\alpha_2)^2}{\alpha_1\alpha_2}\right]^{\alpha_{23}} \left[\frac{(1+\alpha_1+\alpha_2)}{(1+\alpha_1)(1+\alpha_2)}\right]^{-\alpha_t} \times (1+\alpha_1+\alpha_2)^{-1} \right\} ,$$

$$d_2 + d_5 = \ln\left[\frac{(1+\alpha_1+\alpha_2)^2}{\alpha_1\alpha_2}\right] \tag{18}$$

$$\tilde{J} = [m^2(\tfrac{1}{x} - y) + P^2(x-1)]\, \ln\left[\frac{(1+\alpha_1)(1+\alpha_2)}{\alpha_1\alpha_2}\right] .$$

In Eq. (17), M is the hadron (nucleon) mass $(P^2 = M^2)$. In obtaining the α integration, we have performed the double integrals over b_2 and b_5 (see Appendix C, where we discuss the exact $\ln|q^2|$ dependence). Equation (17) explicitly shows, for spin-zero partons case, how the $F_1^{(1)}$ goes to zero. One can also show that, for spin-$\frac{1}{2}$ parton case, $2MW_1 = \omega\nu W_2$ if ω large. Hence, our model predicts the R ratio, defined by $R \equiv \frac{\sigma_S}{\sigma_T}$, is zero for spin-$\frac{1}{2}$ partons, and is infinite for spin-zero partons, in agreement with other models.[6]

Equation (17) is the central result of this model.

III. PREDICTIONS OF THE MODEL

From now on, we will consider spin-$\frac{1}{2}$ parton case only. For the sake of theoretical simplification, we assume the case $\ln|q^2| \to \infty$. (Experimentally, this is unfeasible at the present stage, however.) Equation (17), then is further simplified, we make a further change of variable $\alpha = z \ln\{[(1+\alpha_1)(1+\alpha_2)]/(\alpha_1\alpha_2)\}$, and obtain from Eq. (17) the following expressions for $W_1^{(2)}$, $\nu W_2^{(2)}$:

$$\begin{Bmatrix} F_1^{(2)} \\ F_2^{(2)} \end{Bmatrix} \underset{\ln|q^2|\to\infty}{\sim} \frac{\pi^4}{\ln|q^2|} \int_0^{\omega} d\alpha_1 \int_0^{\omega-\alpha_1} d\alpha_2\, \theta(\omega - 1 - \alpha_1 - \alpha_2)$$

$$\times \int_y^{\infty} dz\left(1 - \frac{y}{z}\right) \begin{Bmatrix} z^2 \\ 2M\omega \end{Bmatrix} \left(\frac{1}{z-\omega}\right)^2 \ln\left[\frac{(1+\alpha_1)(1+\alpha_2)}{\alpha_1\alpha_2}\right] \{\tilde{G}\}$$

$$\times \exp\left\{-\left[m^2(z-y) + P^2\left(\frac{1}{z} - 1\right)\right] \ln\left[\frac{(1+\alpha_1)(1+\alpha_2)}{\alpha_1\alpha_2}\right]\right\}, \quad (19)$$

where $\{\tilde{G}\}$ is given in Eq. (18), and

$$y \equiv \ln\left[\frac{(1+\alpha_1+\alpha_2)^2}{\alpha_1\alpha_2}\right] \Big/ \ln\left[\frac{(1+\alpha_1)(1+\alpha_2)}{\alpha_1\alpha_2}\right]. \quad (20)$$

We now discuss several special limits in above formula (19).

(a) The Regge Limit.

As $\omega \to \infty$, the important region in Eq. (19), is $\alpha_1 \approx \omega$, $\alpha_2 \approx \omega$, and $z \approx \omega$. We make the change of variables $\alpha_1 = \omega\beta_1$, $\alpha_2 = \omega\beta_2$, $z = \omega\alpha$, and expand $\ln\{[(1+\alpha_1)(1+\alpha_2)]/(\alpha_1\alpha_2)\} \approx \frac{1}{\omega}\left(\frac{1}{\beta_1} + \frac{1}{\beta_2}\right)$. We find the regge limits

$$F_2^{(2)} \underset{\omega\to\infty}{\sim} \frac{C}{\ln|q^2|}\,\omega^{\alpha_t - 1},$$

$$F_1^{(2)} \underset{\omega\to\infty}{\sim} \frac{C'}{\ln|q^2|}\,\omega^{\alpha_t}, \quad (21)$$

where C and C' have explicit forms. Since α_t is arbitrary, our model can accommodate the $\nu W_{2p} - \nu W_{2n}$ difference ($\alpha_t = P, P', A_2$, etc.).

(b) The "Fixed Angle" Limit.

This is the case $\omega = 1 + \epsilon$, ϵ small but nonzero. In this limit, we need both s and $-q^2$ to go to infinity. The main contributions to Eq. (19) come from the region α_1, α_2 and $(z - 1)$ small. We make the transformation on Eq. (19)

$$\alpha_1 = \left(1 - \frac{1}{\omega}\right)\beta_1,$$

$$\alpha_2 = \left(1 - \frac{1}{\omega}\right)\beta_2, \quad (22)$$

and

$$(z - 1) = \left[\ln \frac{1}{(1 - \frac{1}{\omega})^2}\right]^{-1} \alpha.$$

We further set $y \approx 1$, and approximate $(z - \omega)$ by $\omega\left[\ln \frac{1}{(1-\frac{1}{\omega})^2}\right]^{-1}$, we find,[15]

$$F_2^{(2)} \underset{\omega=1+\epsilon}{\sim} \frac{C \ln\left(\frac{1}{1-\frac{1}{\omega}}\right)}{\ln|q^2|}\left(\frac{1}{\omega}\right)\left(1 - \frac{1}{\omega}\right)^{-2\alpha_{23}+1}$$

$$F_1^{(2)} \underset{\omega=1+\epsilon}{\sim} \frac{C' \ln\left(\frac{1}{1-\frac{1}{\omega}}\right)}{\ln|q^2|}\left(\frac{1}{\omega^2}\right)\left(1 - \frac{1}{\omega}\right)^{-2\alpha_{23}+1}. \quad (23)$$

The dominant duality diagram is Fig. 2d, while for regge limit, it is Fig. 2f. This is the "triple-reggeon vertex" limit.

(c) The Threshold Limit.

This limit, on the other hand, is the limit $\epsilon \to 0$. By Eq. (4), this limit therefore is

$$F_2^{(2)} \underset{\omega\to 1^+}{\sim} C\,\frac{1}{\omega}\left(1-\frac{1}{\omega}\right)^{-2\alpha_{23}+1},$$
$$F_1^{(2)} \underset{\omega\to 1^+}{\sim} C'\,\frac{1}{\omega^2}\left(1-\frac{1}{\omega}\right)^{-2\alpha_{23}+1}. \tag{24}$$

Because of Eq. (4), one can think this limit is the case $-q^2 \to \infty$ but keep s fixed at various resonance masses. Hence the dominant duality diagram is Fig. 2e. Mathematically, Eq. (23) smoothly approaches Eq. (24), but physically, they are different. The threshold limit is the case discussed by Bloom and Gilman.[4] In fact, within the framework of this model, we have calculated the asymptotic hadronic form factor (see Appendix D), and indeed find the asymptotic form factor to go like

$$G(q^2) \underset{|q^2|\to\infty}{\sim} C\left(\frac{1}{|q^2|}\right)^{-\alpha_{23}+1}. \tag{25}$$

Our model thus satisfies the relation $p = n - 1 = -2\alpha_{23} + 1$, firstly derived by Drell and Yan.[16] Take $p = 3$, yields $\alpha_{23} \doteq -1$.

(d) Predictions for e^+e^- Colliding Beam Experiments.

We now further analytically continue Eq. (19) to the region $q^2 \to +\infty + i\epsilon$, or equivalently, to the region $0 < \omega < 1$. We thus put the Θ-function constraint in Eq. (19) to the upper limit of the range of integration of α_2 [and drop the Θ function in Eq. (19)].[17] We thus predict the threshold behavior $\omega \to 1^-$ and the "fixed angle" limit $\omega \to 1 - \epsilon$, to be similar to Eq. (23) and Eq. (24), except $\left(1-\frac{1}{\omega}\right)$ is replaced by $\left(\frac{1}{\omega}-1\right)$.

A further prediction can be made about the pionization (nucleonization) limit, i.e., the limit as $\omega \to 0$. In this case, we need s, $q^2 \to +\infty$ but keep $s/q^2 \approx 1$. Again, the important region is α_1, α_2, $(y - 1)$, and $(z - 1)$ small. We then find

$$F_2^{(2)} \underset{\omega\to 0}{\sim} C\left(\frac{1}{\ln|q^2|}\right)\left(\frac{\omega^{-2\alpha_{23}+1}}{\ln(\frac{1}{\omega})}\right), \tag{26}$$

which goes to zero as ω^3, if $\alpha_{23} = -1$. The duality diagram is again Fig. 2d.

IV. CONCLUSIONS

The model proposed in this paper, reproduces all essential features of electroproduction, confirms Bloom and Gilman's conjecture,[4] predicts the lepton-pair annihilation process with detection of one hadronic (nucleonic) final state, and emphasizes the dynamical aspects of the lepton-hadronic collisions through the dual properties of the six-point Veneziano formula, similar to the pure hadronic inclusive work.[9] It further suggests that

(a) the parton's final-state interaction is of diffractive type, and breaks the scaling law by a factor of $(a + b\,\ell n|q^2|)^{-1}$,

(b) the heavy virtual photon behaves like a parton-antiparton pair when it participates in the strong interactions,

(c) the parton's mass parameter m^2, can be determined by fitting Eq. (19) to the experimental νW_2 curve.

ACKNOWLEDGMENTS

The author thanks K. Bardakci, J. D. Bjorken, M. B. Einhorn, M. B. Halpern, D. J. Levy, S. Mandelstam, W. Rarita, S. S. Shei, H. P. Stapp, M. Suzuki, D. M. Tow, M. A. Virasoro and other members of the Berkeley high-energy theoretical group. In particular, he would like to mention D. J. Levy, for calling the author's attention to the importance of final-state interactions; S. Mandelstam, for his unfailing advice and encouragement, and last but not least, M. A. Virasoro, for his enormously crucial suggestions, and guidance which actually resolved the difficult parts of the paper. Without him, this work could not be brought to the present form. He also would like to thank G. F. Chew and J. D. Jackson for their hospitality in the theoretical group, Lawrence Radiation Laboratory, Berkeley.

APPENDIX A. THE TRACE CALCULATION FOR SPIN-$\frac{1}{2}$ PARTONS

We show that Eq. (2b) leads to Eq. (2c)

$$K^{(2)}_{\mu\nu} = \frac{1}{(4m)^2} \mathrm{Tr}[(\not{k}_2 + m)\gamma_\mu (-\not{k}_1 + m)(\not{k}_6 + m)\gamma_\nu (-\not{k}_5 + m)] \quad (A.1)$$

$$\equiv \frac{1}{(4m)^2} \mathrm{Tr}(A_\mu B_\nu), \quad (A.2)$$

with

$$A_\mu \equiv (\not{k}_2 + m)\gamma_\mu (-\not{k}_1 + m)$$

$$= [\gamma_\mu(\not{k}\not{q} + m^2 - k^2) + 2k_\mu(\not{k} - \not{q})] + m(2k_\mu - \gamma_\mu\not{q}), \quad (A.3)$$

$$B_\nu \equiv (\not{k}_6 + m)\gamma_\nu (-\not{k}_5 + m)$$

$$= [(-\not{q}\not{k}' + m^2 - k'^2)\gamma_\nu + 2k'_\nu(\not{q} + \not{k}')] - m(2k'_\nu + \not{q}\gamma_\nu), \quad (A.4)$$

$$k_2 \equiv k, \qquad k_5 \equiv k'.$$

We use the standard decompositions to factorize Eq. (A.2),

$$\mathrm{Tr}(A_\mu B_\nu) = \sum_i \mathrm{Tr}(A_\mu T^i)\, \mathrm{Tr}(T_i B_\nu), \quad (A.5)$$

where

$$T_i = 1 \text{ (scalar)}, \quad \gamma_5 \text{ (pseudoscalar)}, \quad \gamma_\sigma \text{ (vector)},$$

$$i\gamma_\sigma\gamma_5 \text{ (pseudo-vector)}, \quad \frac{1}{(2)^{\frac{1}{2}}}\sigma_{\mu\nu} \text{ (tensor)}. \quad (A.6)$$

It can be readily shown that the pseudoscalar and the pseudo-vector components vanish. We further define the scalar component $\mathrm{Tr}(A_\mu)$,

$\mathrm{Tr}(B_\nu)$ to have charge conjugation parity $C = -1$, due to their coupling to the light quanta. Then the vector component is even under C, and the scalar and the tensor components are odd under C. We assume C conservation, hence the vector component is forbidden, we are left with

$$\mathrm{Tr}(A_\mu B_\nu) = \mathrm{Tr}(A_\mu)\,\mathrm{Tr}(B_\nu) + \frac{1}{2}\mathrm{Tr}(A_\mu\sigma_{\lambda\delta})\,\mathrm{Tr}(\sigma^{\lambda\delta}B_\nu). \quad (A.7)$$

Carrying out the trace calculations on the right-hand side of Eq. (A.7), we obtain Eq. (3) in the text,

$$\frac{1}{(4m)^2}\mathrm{Tr}(A_\mu B_\nu) = K^{(2)}_{\mu\nu} = -(2k - q)_\mu (2k' + q)_\nu + q^2\left(g_{\mu\nu} - \frac{q_\mu q_\nu}{q^2}\right). \quad (3)$$

APPENDIX B. FORMULA FOR THE ASYMPTOTIC VIRTUAL FORWARD COMPTON SCATTERING AMPLITUDE

We use the following identities to do the two loop integrations:

$$\frac{1}{k_i^2 - m^2} = -\int_0^\infty da_i \exp[a_i(k_i^2 - m^2)], \quad i = 1,2,5,6, \tag{B.1}$$

$$\int d^4k[1,k_\mu,k_\mu k_\nu] \exp(k^2 z + 2k\cdot y)$$
$$= \frac{i\pi^2}{z^2}\left[1, -\frac{y_\mu}{z}, \frac{-g_{\mu\nu}}{2z} + \frac{y_\mu y_\nu}{z^2}\right] \exp\left(\frac{y^2}{z}\right). \tag{B.2}$$

Separate out k_2, k_5 dependence factors in Eq. (3), use Eqs. (B.1), (B.2), and perform the integrations over $d^4k_2\, d^4k_5$, the result is

$$T^{(i)}_{\mu\nu} = \int_0^\infty da_1\, da_2\, da_5\, da_6 \int_0^\infty d(\ell n \tfrac{1}{x})\, d(\ell n \tfrac{1}{y})\, d(\ell n \tfrac{1}{z})\, \{G\}\, K^{(i)}_{\mu\nu}$$

$$\times \frac{\pi^4}{C^2} \exp\left\{q^2\left[\ell n \frac{1}{xy} + (1-\omega)\, \ell n \frac{1}{z} + \frac{D}{C}\right]\right\} \exp(-J), \tag{B.3}$$

where

$$\{G\} \equiv \left\{\frac{1}{(1-x)(1-y)(1-z)} \left[\frac{(1-xyz)^2}{(1-x)(1-y)}\right]^{\alpha_{23}}\right.$$

$$\left.\times \left[\frac{(1-z)(1-xyz)}{(1-xz)(1-yz)}\right]^{-\alpha_t} (1-xyz)^{-\alpha_{16}}\right\}, \tag{B.4}$$

$$C \equiv \left[a_1 + a_6 + a_2 + a_5 + \ell n \frac{(1-xyz)^2}{(1-x)(1-y)}\right]$$

$$\times \ell n\left(\frac{1}{1-xyz}\right) + \left(a_1 + a_2 + \ell n \frac{1-xyz}{1-x}\right)\left(a_5 + a_6 + \ell n \frac{1-xyz}{1-y}\right), \tag{B.5}$$

$$D \equiv (a_1 + a_6)\left[a_2 + a_5 + \ell n \frac{(1-xyz)^2}{(1-x)(1-y)} - \omega\, \ell n \frac{(1-xz)(1-yz)}{(1-x)(1-y)}\right]$$

$$\times \ell n\left(\frac{1}{1-xyz}\right) + a_6\left(a_1 + a_2 + \ell n \frac{1-xyz}{1-x}\right)$$

$$\times \left(a_5 + \ell n \frac{1-xyz}{1-y} - \omega\, \ell n \frac{1-yz}{1-y}\right)$$

$$+ a_1\left(a_5 + a_6 + \ell n \frac{1-xyz}{1-y}\right)\left(a_2 + \ell n \frac{1-xyz}{1-x} - \omega\, \ell n \frac{1-xz}{1-x}\right), \tag{B.6}$$

$$J \equiv m^2(a_1 + a_2 + a_5 + a_6) - P^2\left\{\ell n \frac{(1-xz)(1-yz)}{(1-x)(1-y)}\right.$$

$$- \frac{1}{C}\left[\ell n\left(\frac{1}{1-xyz}\right) \ell n^2 \frac{(1-xz)(1-yz)}{(1-x)(1-y)}\right.$$

$$+ \left(a_1 + a_2 + \ell n \frac{1-xyz}{1-x}\right) \ell n^2\left(\frac{1-yz}{1-y}\right)$$

$$\left.\left. + \left(a_5 + a_6 + \ell n \frac{1-xyz}{1-y}\right) \ell n^2\left(\frac{1-xz}{1-x}\right)\right]\right\}, \tag{B.7}$$

$$\omega \equiv \frac{2P\cdot q}{-q^2} = 1 - \frac{s - P^2}{q^2}, \tag{B.8}$$

and

$$K^{(i)}_{\mu\nu} = c_1^{(i)} P_\mu P_\nu + c_2^{(i)}(P_\mu q_\nu + P_\nu q_\mu) + c_3^{(i)} q_\mu q_\nu + c_4^{(i)} g_{\mu\nu}. \tag{B.9}$$

At this moment, we are not interested in the expressions for $c_j^{(i)}$, $i = 1,2$, $j = 1,2,3,4$.

As explained in the text (Eqs. (5-10), we need to make the scale transformation in (B.3):

$$\ell n \frac{1}{x} = \rho\beta_1,$$

$$\ell n \frac{1}{y} = \rho\beta_2,$$

$$\ell n \frac{1}{z} = \rho\beta_3,$$

$$a_1 = a_1'/E, \tag{B.10}$$

$$a_6 = a_6'/E,$$

$$a_1' = \rho\beta_4,$$

$$a_6' = \rho(1 - \beta_1 - \beta_2 - \beta_3 - \beta_4).$$

Substitute Eqs. (B.10) in Eq. (B.3) and expand everything else in terms of ρ and β_5'. Further put $\ell n\, \rho^{-1} = \ell n\, q^2$, $\rho = 0$ everywhere except the coefficient of q^2 and in $\{G\}$. We then obtain, after the ρ integration,

$$T_{\mu\nu}^{(i)} \underset{\substack{s\to-\infty \\ q^2\to-\infty}}{\sim} \int_0^\infty da_2\, da_5 \int_0^1 d\beta_1 \int_0^{1-\beta_1} d\beta_2 \int_0^{1-\beta_1-\beta_2} d\beta_3\, \{G'\}$$

$$\times\ \overline{K}_{\mu\nu}^{(i)}\, \mathrm{Exp}(-J')\, \frac{\pi^4}{(C'E)^2} \left[\frac{1}{|q^2|(1-\omega\beta_3)}\right]^{2-\alpha_{16}} \Gamma(2-\alpha_{16}), \tag{B.11}$$

where

$$\{G'\} = \left\{\frac{(1-\beta_1-\beta_2-\beta_3)}{\beta_1\beta_2\beta_3}\left[\frac{(\beta_1+\beta_2+\beta_3)^2}{\beta_1\beta_2}\right]^{\alpha_{23}}\right.$$

$$\left.\times\ \left[\frac{\beta_3(\beta_1+\beta_2+\beta_3)}{(\beta_1+\beta_3)(\beta_2+\beta_3)}\right]^{-\alpha_t} (\beta_1+\beta_2+\beta_3)^{-1}\right\}, \tag{B.12}$$

$$C' = \left[a_2 + a_5 + \ell n \frac{(\beta_1+\beta_2+\beta_3)^2}{(\beta_1+\beta_3)(\beta_2+\beta_3)}\right] \ell n\, q^2$$

$$+ \left[a_2 + \ell n\left(\frac{\beta_1+\beta_2+\beta_3}{\beta_1}\right)\right]\left[a_5 + \ell n\left(\frac{\beta_1+\beta_2+\beta_3}{\beta_2}\right)\right], \tag{B.13}$$

$$E = 1 - \frac{\omega\, \ell n\left[\dfrac{(\beta_1+\beta_3)(\beta_2+\beta_3)}{\beta_1\beta_2}\right]}{\left[a_2 + a_5 + \ell n \dfrac{(\beta_1+\beta_2+\beta_3)^2}{\beta_1\beta_2}\right]}, \tag{B.14}$$

$$J' \equiv m^2(a_2 + a_5) + P^2 \left\{\left[\ell n \frac{(\beta_1+\beta_3)(\beta_2+\beta_3)}{\beta_1\beta_2}\right]^2\right.$$

$$\left.\times\ \left[a_2 + a_5 + \ell n \frac{(\beta_1+\beta_2+\beta_3)^2}{\beta_1\beta_2}\right]^{-1} - \ell n\left[\frac{(\beta_1+\beta_3)(\beta_2+\beta_3)}{\beta_1\beta_2}\right]\right\}, \tag{B.15}$$

and the explicit form for $\overline{K}_{\mu\nu}^{(i)}$ is

$$\overline{K}_{\mu\nu}^{(i)} \approx \begin{cases} 4a^2(P_\mu + \frac{1}{2a} q_\mu)(P_\nu + \frac{1}{2a} q_\nu) - 2\left(g_{\mu\nu} - \dfrac{q_\mu q_\nu}{q^2}\right) \\ \qquad \left[a_2 + a_5 + \ell n \dfrac{(\beta_1+\beta_2+\beta_3)^2}{\beta_1\beta_2}\right]^{-1}, \quad i = 1, \\ 4a^2(P_\mu + \frac{1}{2a} q_\mu)(P_\nu + \frac{1}{2a} q_\nu) + q^2\left(g_{\mu\nu} - \dfrac{q_\mu q_\nu}{q^2}\right), \quad i = 2, \end{cases} \tag{B.16}$$

where

$$a \equiv \ell n \left[\frac{(\beta_1+\beta_3)(\beta_2+\beta_3)}{\beta_1\beta_2}\right] \Big/ \left[a_2 + a_5 + \ell n \frac{(\beta_1+\beta_2+\beta_3)^2}{\beta_1\beta_2}\right]. \tag{B.17}$$

Equation (B.11), with $\alpha_{16} \equiv 1$, is the asymptotic formula for the virtual forward Compton scattering amplitude, valid for both[14] space-like and time-like[17] heavy virtual photon, as long as $\omega < 1$.

APPENDIX C. REDUCTION OF THE DOUBLE INTEGRAL OVER b_2, b_5 INTO THE SINGLE INTEGRAL OVER α

After substituting Eqs. (13), (14) into Eq. (12), we isolate the double integrals over b_2, b_5 in the form

$$I = \int_{d_2}^{\infty} db_2 \int_{d_5}^{\infty} db_5 \frac{f(b_2 + b_5)}{[b_2 + b_5)\, \ell n|q^2| + b_2 b_5]^2} , \qquad (C.1)$$

where $f(b_2 + b_5)$ is from $\frac{1}{(E')^2} \mathrm{Exp}(-J'')$, which is only a function of the sum of b_2 and b_5. The denominator function in Eq. (C.1) is from C'' in Eq. (12), or Eq. (B.13). We make the change of variable $b_2 \to b_2 + b_5 \equiv \alpha$, and then interchange the order of integration from b_2, α to α, b_2, getting

$$I = \int_{d_2+d_5}^{\infty} d\alpha \int_{d_2}^{\alpha - d_5} db_2 \frac{f(\alpha)}{[b_2^2 - \alpha b_2 - \alpha\, \ell n|q^2|]^2} . \qquad (C.2)$$

The b_2 integral can be explicitly done, resulting in

$$I = \int_{d_2+d_5}^{\infty} d\alpha \frac{f(\alpha)}{2\left(\frac{\alpha^2}{4} + \alpha\, \ell n|q^2|\right)^{\frac{1}{2}}}$$

$$\times\ \ell n \frac{\left[\frac{\alpha}{2} - d_5 + \left(\frac{\alpha^2}{4} + \alpha\, \ell n|q^2|\right)^{\frac{1}{2}}\right]\left[\frac{\alpha}{2} - d_2 + \left(\frac{\alpha^2}{4} + \alpha\, \ell n|q^2|\right)^{\frac{1}{2}}\right]}{\left[\frac{\alpha}{2} - d_5 - \left(\frac{\alpha^2}{4} + \alpha\, \ell n|q^2|\right)^{\frac{1}{2}}\right]\left[\frac{\alpha}{2} - d_2 - \left(\frac{\alpha^2}{4} + \alpha\, \ell n|q^2|\right)^{\frac{1}{2}}\right]} . \qquad (C.3)$$

Strictly speaking, Eq. (C.3) is the exact form that should appear in Eq. (17) of the text. It exhibits the $\ell n|q^2|$ dependence exactly.

In the experimental situation as the factor $\ell n|q^2|$ is doubled when $|q^2|$ varies from 2 GeV to 15 GeV, one cannot consider $\ell n|q^2|$ large. However, for the theoretically interesting case, we still take $\ell n|q^2|$ large at least inside the complicated logarithmic expression in Eq. (C.3). Thus we approximate Eq. (C.3) to

$$I \underset{\ell n|q^2|\to\infty}{\approx} \int_{d_2+d_5}^{\infty} d\alpha \, \frac{f(\alpha)(\alpha - d_2 - d_5)}{\left(\frac{\alpha^2}{4} + \alpha \, \ell n|q^2|\right)} \, . \tag{C.4}$$

Since $f(\alpha)$ is of the form $\exp(-a\alpha - b\,\frac{1}{\alpha})$, and so the α integral is convergent at the upper limit of integration, we can further approximate Eq. (C.4) to

$$I \underset{\ell n|q^2|\to\infty}{\approx} \frac{1}{\ell n|q^2|} \int_{d_2+d_5}^{\infty} d\alpha \, \frac{f(\alpha)}{\alpha} (\alpha - d_2 - d_5). \tag{C.5}$$

This is the approximation we take in Sec. III.

APPENDIX D. ASYMPTOTIC HADRONIC FORM FACTORS

We write down the invariant amplitude corresponding to the form factor picture Fig. 4,

$$T_\mu^{(i)} = \int d^4k \, \frac{K_\mu^{(i)} \, B_4[q - k, k, P - (P + q)]}{(k^2 - m^2)[(k - q)^2 - m^2]} \, , \tag{D.1}$$

where

$$B_4 = \int_0^1 dx \, x^{-\alpha_{12}(q)-1} (1 - x)^{-\alpha_{23}(k+P)-1}$$

and $K_\mu^{(i)} = -(2k - q)_\mu$, for both spin-0 and spin-$\frac{1}{2}$ partons. After the loop-momentum integration, and setting

$$\omega = \frac{2P\cdot q}{-q^2} = 1,$$

we get

$$T_\mu^{(i)} = \int_0^1 dx \, x^{-\alpha_{12}-1} (1 - x)^{-\alpha_{23}-1} K_\mu^{(i)} \int_0^\infty da_1 \, da_2$$

$$\times \exp[-m^2(a_1 + a_2) + P^2 \, \ell n(1 - x)^{-1}] \, \frac{1}{C^2} \, \exp\left(q^2 \frac{D}{C}\right) \, , \tag{D.2}$$

where

$$C = a_1 + a_2 + \ell n(1 - x)^{-1},$$

$$\frac{D}{C} = \ell n \frac{1}{x} + \frac{a_1 a_2}{a_1 + a_2 + \ell n(1 - x)^{-1}} \, . \tag{D.3}$$

As $q^2 \to -\infty$, the important region is when a_1, a_2, $\ell n \frac{1}{x}$ are small. We put, in Eq. (D.2),

$$a_1 = (\rho\, \ell n|q^2|)^{\frac{1}{2}}\, \beta_1 ,$$

$$a_2 = (\rho\, \ell n|q^2|)^{\frac{1}{2}}\, \beta_2 , \qquad (D.4)$$

$$\ell n \frac{1}{x} = \rho(1 - \beta_1 - \beta_2).$$

Further approximate $(1 - x) \approx \rho(1 - \beta_1 - \beta_2)$, $\ell n(1 - x)^{-1} \approx \ell n|q^2|$, and perform the ρ integration, we get

$$T_\mu^{(i)} \underset{|q^2|\to\infty}{\sim} \frac{1}{\ell n|q^2|} \int_0^1 d\beta_1 \int_0^{1-\beta_1} d\beta_2\, \bar{K}_\mu^{(i)} (1 - \beta_1 - \beta_2)^{-\alpha_{23}-1}$$

$$\times \left\{ \frac{1}{|q^2|[\beta_1\beta_2 + (1 - \beta_1 - \beta_2)] + [f(\beta_1,\beta_2)]} \right\}^{-\alpha_{23}+1} , \qquad (D.5)$$

where

$$f(\beta_1,\beta_2) = \begin{cases} m^2(\beta_1 + \beta_2)^2 & \text{if } P^2 = m^2, \\ i\epsilon & \text{if } P^2 \neq m^2. \end{cases} \qquad (D.6)$$

The $i\epsilon$-prescription in (D.6) is the ordinary prescription for propagators used in the Feynman field theory.

Because there is further enhancement in q^2 behavior when β_1, $(1 - \beta_1 - \beta_2)$ are near zero, we make further scale transformation

$$\beta_1 = \rho'\alpha_1,$$

$$(1 - \beta_1 - \beta_2) = \rho'(1 - \alpha_1). \qquad (D.7)$$

We then integrate over ρ' near zero, i.e.,

$$T_\mu^{(i)} \underset{|q^2|\to\infty}{\sim} \frac{1}{\ell n|q^2|} \int_0^1 d\alpha_1 \int_0^{\epsilon'} \rho' d\rho' \frac{(\rho'\alpha)^{-\alpha_{23}-1}}{[|q^2|\rho' + f]^{-\alpha_{23}+1}} , \qquad (D.8)$$

where

$$f = \begin{cases} m^2, & \text{if } P^2 = m^2, \\ i\epsilon, & \text{if } P^2 \neq m^2. \end{cases} \qquad (D.9)$$

We then approximate Eq. (D.8) by

$$T_\mu^{(i)} \sim \frac{1}{\ell n|q^2|} \left(\frac{1}{|q^2|}\right)^{-\alpha_{23}} \int_0^1 d\alpha_1\, \alpha_1^{-\alpha_{23}-1} \int_0^{\epsilon'} d\rho' \frac{1}{(|q^2|\rho' + i\epsilon)}. \qquad (D.10)$$

Carry out the ρ' integration, we find

$$T_\mu^{(i)} \sim C\left(\frac{1}{|q^2|}\right)^{-\alpha_{23}+1} [1 + O(\ell n^{-1}|q^2|)]. \qquad (D.11)$$

Thus the corresponding form factor $G(q^2)$ goes like

$$G(q^2) \underset{|q^2|\to\infty}{\sim} C\left(\frac{1}{|q^2|}\right)^{-\alpha_{23}+1} . \qquad (D.12)$$

This result is in agreement with Gerstein, Gottfried, and Huang's calculation.[18] However, we want to call the attention to the crucial importance of the $i\epsilon$-prescription. We also stress that the form factor behavior, Eq. (D.12), is exactly the same for the elastic and all inelastic cases.

FOOTNOTES AND REFERENCES

* This work was done under the auspices of the U.S. Atomic Energy Commission.

1. R. P. Feynman, Phys. Rev. Letters 23, 1415 (1969), and lectures. J. D. Bjorken, Proceedings of 1967 International School of Physics at Varenna (Academic Press, New York and London, 1968).
2. P. Olesen and H. B. Nielsen, Phys. Letters 32B, 203 (1970).
3. B. Sakita and M. A. Virasoro, Phys. Rev. Letters 24, 1146 (1970).
4. E. D. Bloom and F. J. Gilman, Phys. Rev. Letters 25, 1140 (1970).
5. G. Veneziano, Narrow Resonance Models Compatible With Duality and Their Developments, Massachusetts Institute of Technology preprint.
6. R. P. Feynman (unpublished); J. D. Bjorken and E. A. Paschos, Phys. Rev. 185, 1975 (1969); S. D. Drell, D. L. Levy, and T. M. Yan, Phys. Rev. Letters 22, 744 (1969); Phys. Rev. 187, 2159 (1969); SLAC-PUB-645,-685 (1969)(Phys. Rev., to be published); T. M. Yan and S. D. Drell, SLAC-PUB-692 (1969), and further papers. H. D. I. Abarbanel, M. L. Goldberger, and S. B. Treiman, Phys. Rev. Letters 22, 500 (1969); P. V. Landshoff, J. C. Polkinghorne, and R. D. Short, Cambridge preprint DAMTP 70/32, Oct. 1970; P. V. Landshoff and J. C. Polkinghorne, Cambridge preprint DAMTP 70/36. Zyun F. Ezawa, Tokyo UT-68 (1970); S. S. Shei and D. M. Tow, Phys. Rev. Letters 26, 470 (1971).
7. D. L. Levy, Department of Physics, University of California-Berkeley, private communication.
8. J. D. Bjorken, Department of Physics, Stanford University, private communication.

9. M. A. Virasoro, A Simple Dual Resonance Model for Inclusive Reactions, Berkeley preprint 11/70; C. S. DeTar et al., Phys. Rev. Letters 26, 675 (1971), and their MIT-Brown preprint 1/71.
10. S. D. Drell and T. M. Yan, SLAC-PUB-755 (1970).
11. S. Mandelstam, Phys. Rev. 184, 1625 (1969); K. Bardakci and M. B. Halpern, Phys. Rev. 183, 1456 (1969).
12. M. A. Virasoro, Ref. 9.
13. This procedure is necessary, and is crucial in obtaining the correct threshold behavior discussed by Bloom and Gilman in Ref. 4.
14. Here we take the usual smoothed average assumption for the Veneziano formula in the $+\infty$ directions.
15. The more precise form of $\ln\left(1 - \frac{1}{\omega}\right)^{-1}$ dependence is $\ln\left(\frac{1}{1 - \frac{1}{\omega}}\right) \Big/ \left[a \ln\left(\frac{1}{1 - \frac{1}{\omega}}\right) + b \ln|q^2|\right]$, see Appendix C.
16. S. D. Drell and T. M. Yan, Phys. Rev. Letters 24, 181 (1970); G. West, Phys. Rev. Letters 24, 1206 (1970).
17. We should mention that because of the $i\epsilon$-prescription in Eq. (3), the factor $\ln|q^2|$ should become $(\ln^2|q^2| + \pi^2)^{\frac{1}{2}}$.
18. I. S. Gerstein, K. Gottfried, and K. Huang, Phys. Rev. Letters 24, 294 (1970).

FIGURE CAPTIONS

Fig. 1. The kinematics of electroproduction and e^+e^- colliding beam experiment.

Fig. 2. (a) The six-point dual resonance model for the virtual forward Compton scattering.

(b) Fishnet structure of the model.

(c) The x,y,z variables in the expression for the standard six-point Veneziano formula.

(d) The Feynman parameters for the two loop integrations. This is also the diagram for the "fixed angle" limit.

(e) The duality diagram that dominates the threshold behavior of Bloom and Gilman.

(f) The dominant duality diagram for the regge limit.

Fig. 3. The physical regions for eP, e^+e^- and the virtual forward Compton scattering processes. The dotted lines indicate the asymptotic limit and the analytic continuation, taken in the text.

Fig. 4. The asymptotic form factor picture.

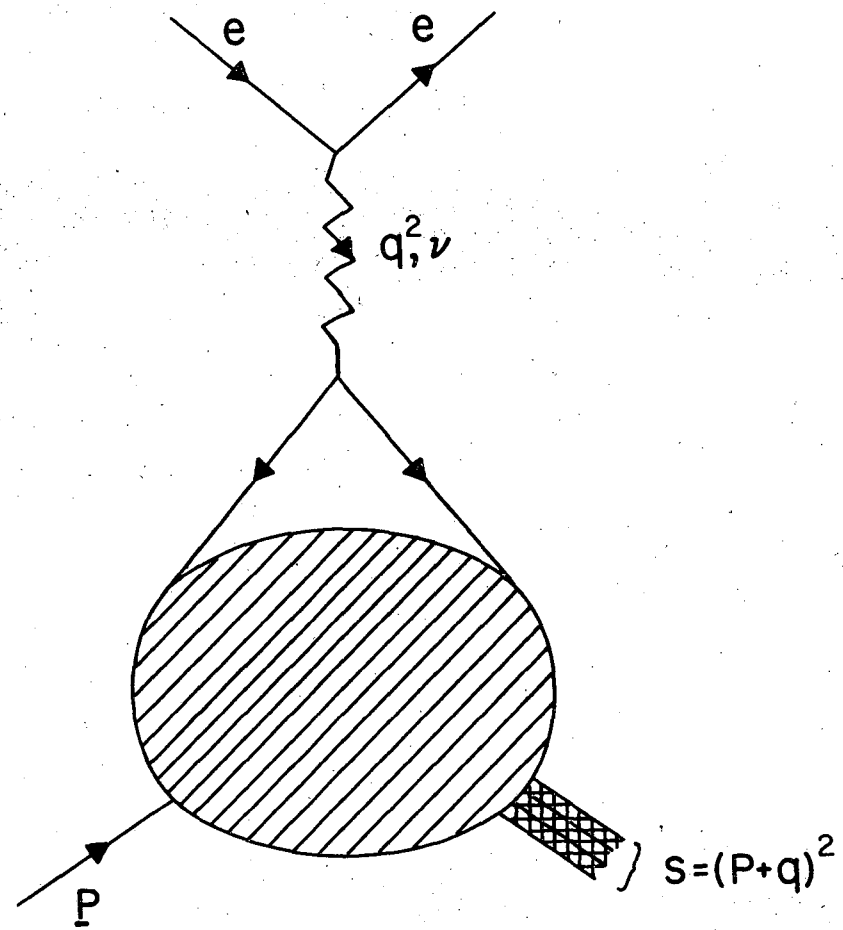

(Fig. 1)

XBL713-3182

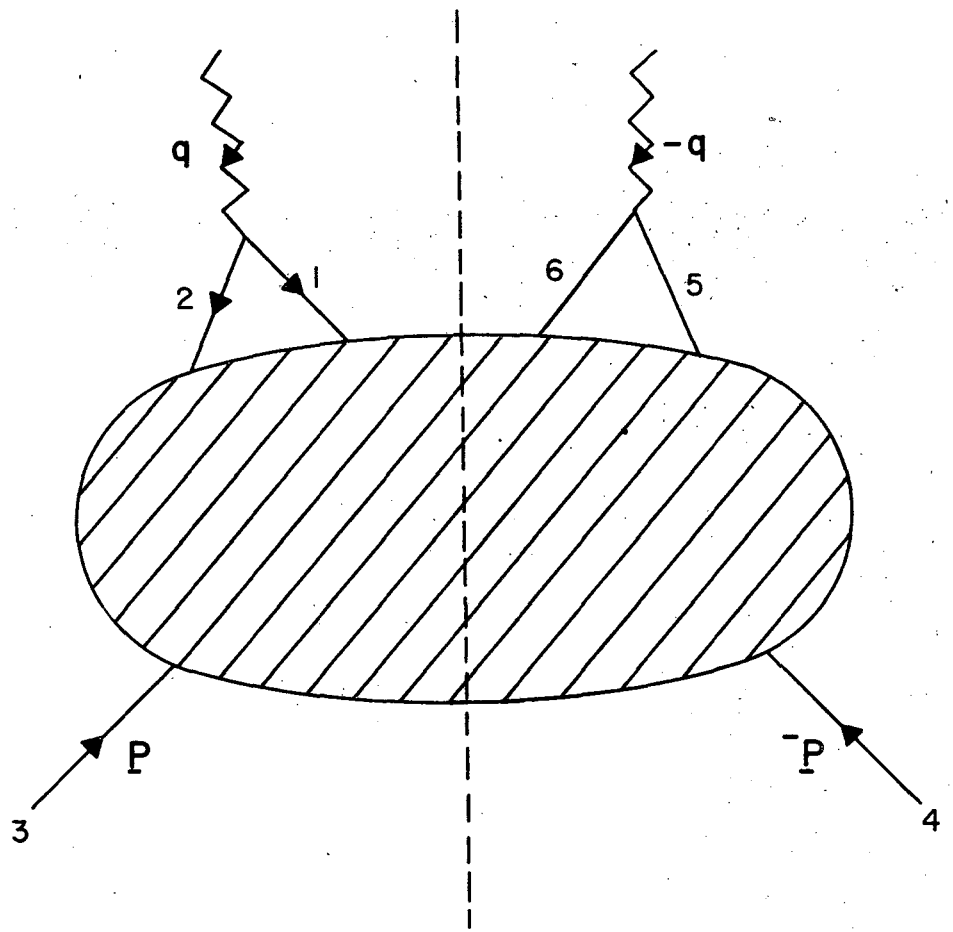

(Fig. 2a)

XBL713-3181

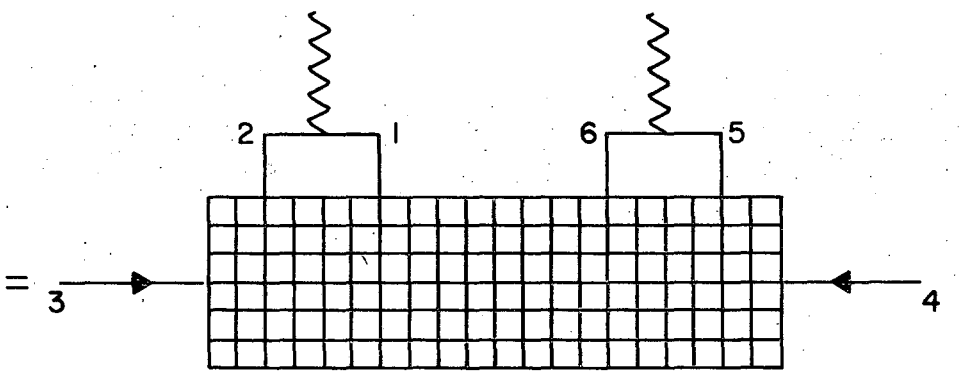

(Fig. 2b)

XBL713-3180

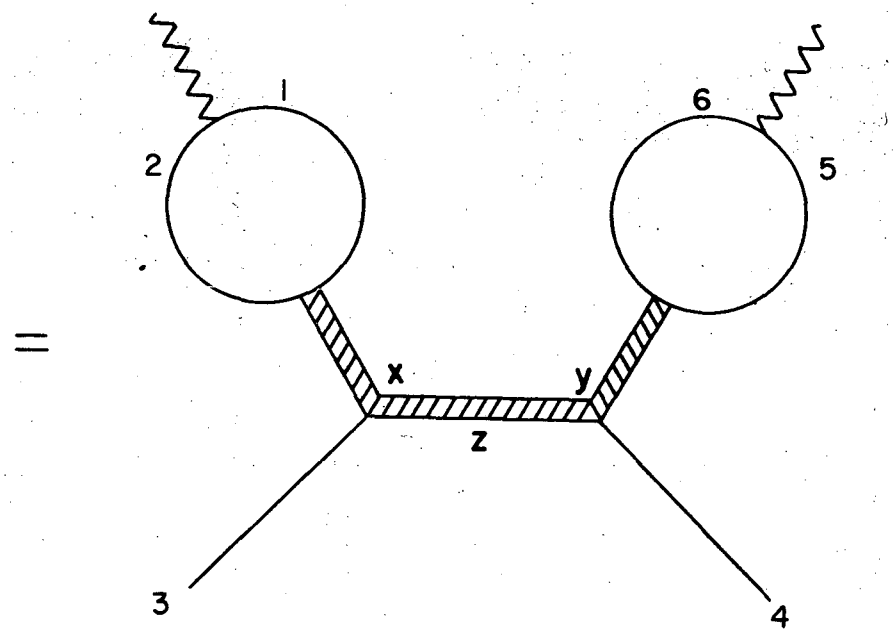

(Fig. 2c)

XBL713-3179

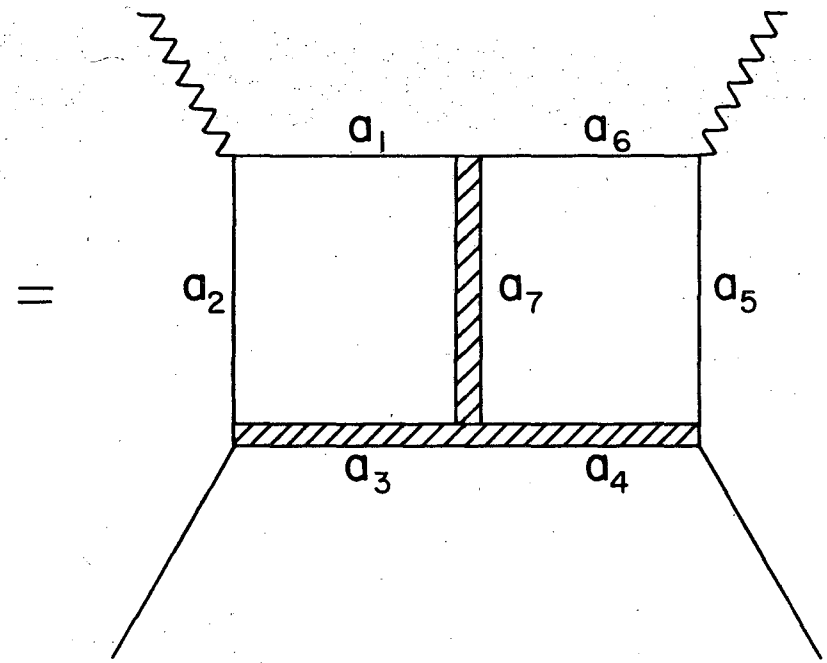

(Fig. 2d)

XBL713-3178

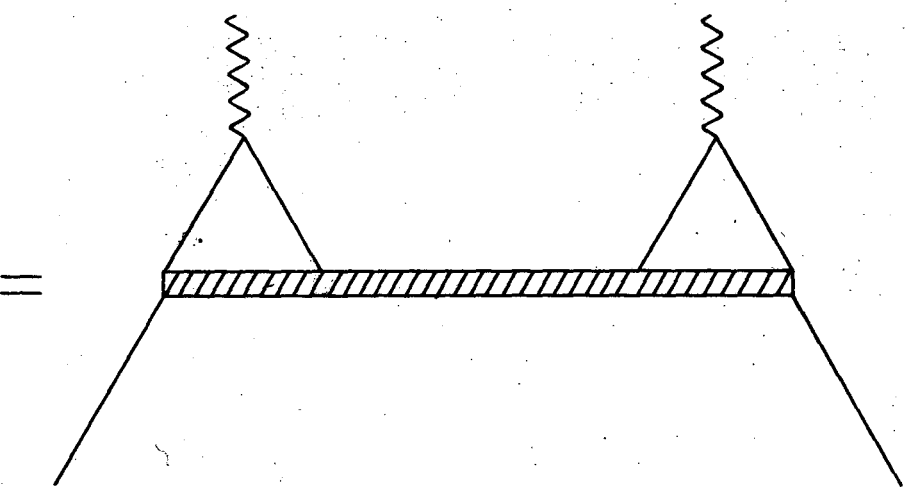

(Fig. 2e)

XBL713-3177

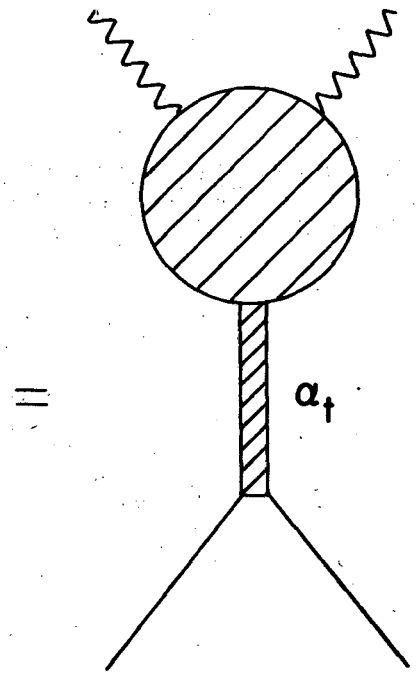

(Fig. 2f)

XBL713-3176

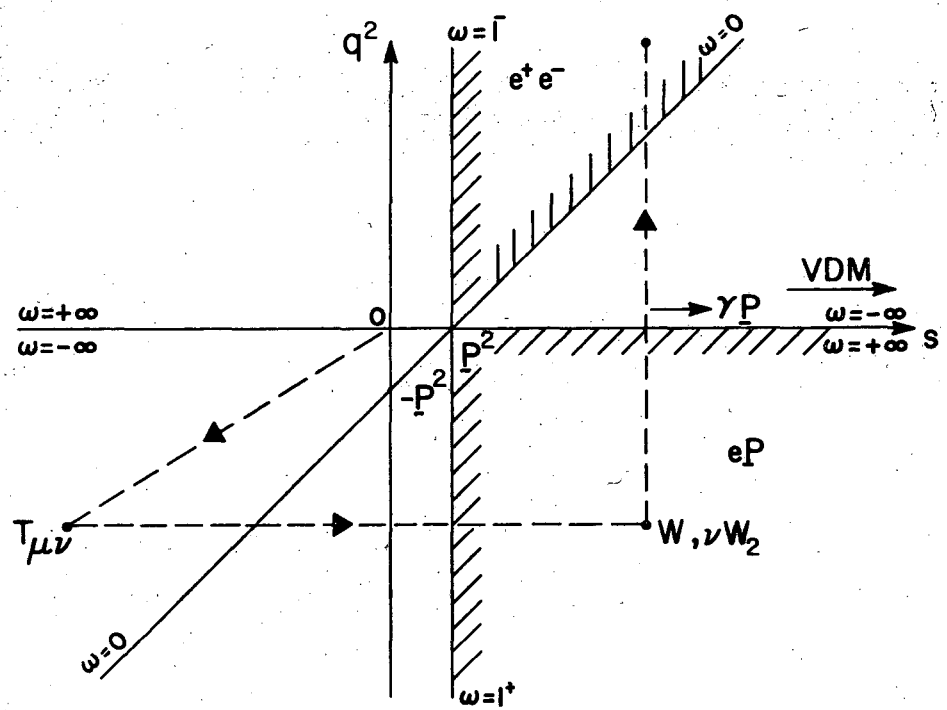

(Fig. 3)

XBL713-3175

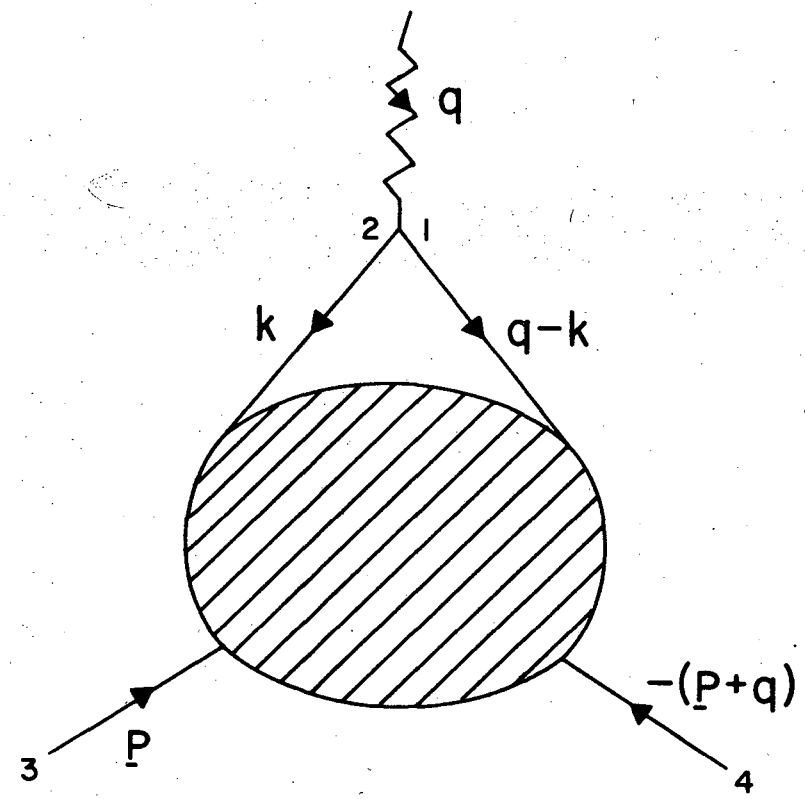

(Fig. 4)

XBL713-3174

LEGAL NOTICE

This report was prepared as an account of work sponsored by the United States Government. Neither the United States nor the United States Atomic Energy Commission, nor any of their employees, nor any of their contractors, subcontractors, or their employees, makes any warranty, express or implied, or assumes any legal liability or responsibility for the accuracy, completeness or usefulness of any information, apparatus, product or process disclosed, or represents that its use would not infringe privately owned rights.

TECHNICAL INFORMATION DIVISION
LAWRENCE RADIATION LABORATORY
UNIVERSITY OF CALIFORNIA
BERKELEY, CALIFORNIA 94720