UCRL - 206 Rev.

UNIVERSITY OF CALIFORNIA

Radiation Laboratory

TWO-WEEK LOAN COPY

This is a Library Circulating Copy which may be borrowed for two weeks. For a personal retention copy, call Tech. Info. Division, Ext. 5545

BERKELEY, CALIFORNIA

UCRL 206
Revised

Declassification Procedure

CONFIDENTIAL

CLASSIFICATION CANCELLED BY AUTHORITY
OF THE DISTRICT ENGINEER
BY THE DECLASSIFICATION COMMITTEE

UNIVERSITY OF CALIFORNIA

DECLASSIFIED

Contract No. W-7405-eng-48

PARAMAGNETIC SUSCEPTIBILITIES AND ELECTRONIC STRUCTURES OF AQUEOUS CATIONS OF ELEMENTS 92 to 95

Jerome J. Howland and Melvin Calvin

December 8, 1948

CAUTION

This document contains information affecting the National Defense of the United States. Its transmission or the disclosure of its contents in any manner to an unauthorized person is prohibited and may result in severe criminal penalties under applicable Federal Laws.

Berkeley, California

DECLASSIFIED

CLASSIFICATION CANCELLED BY AUTHORITY
OF THE DISTRICT ENGINEER
BY THE DECLASSIFICATION COMMITTEE

DECLASSIFICATION PROCEDURE, Oak Ridge. SERIES A

	Copy Numbers
Declassification Officer	1-4
Publication Officer	5
Patent Dept.	6-7
Area Manager, Berkeley	8
E. O. Lawrence	9
Information Division	10

INFORMATION DIVISION
RADIATION LABORATORY
Univ. of California
Berkeley, California

DECLASSIFIED

December 8, 1948

CONFIDENTIAL

PARAMAGNETIC SUSCEPTIBILITIES AND ELECTRONIC STRUCTURES OF AQUEOUS CATIONS OF ELEMENTS 92 TO 95

CLASSIFICATION CANCELLED BY AUTHORITY OF THE DISTRICT ENGINEER BY THE DECLASSIFICATION COMMITTEE

Jerome J. Howland[1] and Melvin Calvin

Radiation Laboratory and Department of Chemistry
University of California, Berkeley, California

ABSTRACT

Magnetic susceptibilities per gram atomic weight of elements 92 to 95 in most of their oxidation states were measured at 20°C. on 0.1 ml of solution which was 0.005 to 0.09 M in heavy element. The values obtained (all paramagnetic) in e.m.u. x 10^6 were: U(IV), 3690; Np(VI), 2060; Np(V), 4120; Np(IV), 4000; Pu(IV), 1610; Pu(III), 370; Am(III), 720.

The results could be interpreted only on the basis of electronic configurations $5f^n$, even though susceptibilities were generally lower than the theoretical values and lower than experimental values for corresponding lanthanide $4f^n$ cations. The lower values should be expected as a result of the Stark effect produced by electric fields of anions and of water dipoles. Failure of the Russell-Saunders approximation to the coupling between electrons may account for some of the error in the theoretical calculations. Wider multiplet splitting in the actinides accounts for the fact that the susceptibilities of Pu(III) and Am(III) are many-fold lower than those of Sm(III) and Eu(III) respectively.

CLASSIFICATION CANCELLED BY AUTHORITY
OF THE DISTRICT ENGINEER
AND DECLASSIFICATION COMMITTEE

December 8, 1948

PARAMAGNETIC SUSCEPTIBILITIES AND ELECTRONIC STRUCTURES OF AQUEOUS CATIONS OF ELEMENTS 92 TO 95

Jerome J. Howland[1] and Melvin Calvin

Radiation Laboratory and Department of Chemistry
University of California, Berkeley, California

Chemical and physical properties and theoretical calculations have indicated that elements of about Z = 90 and higher constitute a series in which the 5f orbitals are filled as Z increases. These heavy elements have been called actinides in analogy to the name lanthanides for the rare earth elements[2]. It was of interest to determine whether corresponding aqueous cations of actinide and lanthanide elements have the same outer electronic configurations even though the actinide concept might not require that they be identical.

If an atom has its electrons in question (i.e., those in addition to the inert gas structure) in inner orbitals, the electrons may be electrostatically shielded from neighboring atoms to the extent that the magnetic susceptibility of a solution of such atoms can be deduced from quantum numbers of the ground state of the electronic configuration. Sometimes the converse, deduction of ground state quantum numbers from the susceptibility, will yield a unique answer. The method was successful for the lanthanide tripositive ions which have as outer configurations $4f^{1-14}5s^{2}5p^{6}$.

Susceptibilities of U(IV) and U(III) solutions were reported by Lawrence[3]. Solid uranium compounds have been studied by numerous investigators[4]. At room temperature the susceptibility of U(IV) solutions and salts approximates the theoretical value derived from the spin magnetic moment of atoms with two unpaired electrons. Since this type of calculation was successful in accounting for the susceptibility of the first row transi-

tion element ions which have partially filled 3d electron orbitals, the observed susceptibility of U(IV) was usually interpreted as evidence for a $5d^2$ electron configuration. This deduction was inconsistent with the fact that the observed susceptibilities of cations of heavier transition elements (those with partially filled 4d or 5d orbitals) are generally many-fold smaller than the "spin only" calculations, and later studies of general properties of U, Np and Pu made 6d configurations improbable. Hutchison and Elliott[5] have interpreted their recent measurements on uranium(IV) susceptibilities on the basis of a $5f^2$ structure.

Shortly after plutonium became available, the susceptibilities of dilute Pu(VI), Pu(V), Pu(IV), and Pu(III) solutions were measured[6] with the expectation that they might closely parallel those of Pr(III) through Sm(III) if the actinide element ions also had f^n electronic configurations. The measurement of Pu(V) was very crude because of the instability of that state[7]. For the other three plutonium oxidation states there was no close agreement with expectations of particular electronic structures. More actinide elements which exist in one or more oxidation states could be used in the present study. Since the alpha activity of the available isotope of curium would rapidly decompose the water of its aqueous solution, experiments with this material were not attempted.

Experimental

Magnetic susceptibility measurements were made on 0.1 ml samples which were of the order of 0.01 M in heavy element by use of a bifilar suspension method developed from one described by Theorell[8]. A divided glass capillary was suspended as shown in Fig. 1. A solution was in the left compartment; distilled water was in the right. The capillary moved a distance of the order of 0.1 cm when the current through the magnet coils was 40 amps.

(Field strength directly between the pole faces was about 17,000 Gauss.)

The horizontal force, F, on the capillary very nearly equals wD/L where w is the weight of the capillary, L is the fiber length, and D is the horizontal displacement which was observed in a microscope equipped with a traveling cross hair. One scale division on the knob corresponds to a distance of 8×10^{-5} cm or to a force of 6×10^{-7} gram if the load is a 0.5 gram capillary.

Each solution was measured several times at magnet coil currents of 20, 30 and 40 amps. in order to establish that susceptibilities were always independent of field strength.

The molar susceptibility, χ, of a substance equals I_m/H where I_m is the magnetic moment of a gram atomic weight of the bulk material and H is the magnetic field strength. The total force acting on a long cylinder of solution with cross section A and whose axis passes through an inhomogeneous field is

$$wD/L = F = \chi \underline{M} A (H_2^2 - H_1^2)/2000 \qquad (1)$$

where $\underline{M}$ is the molar concentration and H_1 and H_2 are the field strengths on the ends of the solution.

Equation (1) would hold only for a homogeneous cylindrical sample; it was used for rough estimation of the field strength H_2 from the displacements of nickel chloride solutions. Susceptibilities of other substances were calculated on the assumption that the displacement was proportional to $\chi \underline{M}$ if w, A, H_1 and H_2 were held constant. The displacement was measured for each actinide element solution in the same compartment and at the same magnet coil current ($\pm$0.2 amps.) as was done for a standard nickel chloride solution. Correction for diamagnetism of the solvent and of the anions and for non-uniformity of the capillary was made by subtraction of an

experimentally determined displacement. If the molar susceptibility of nickel chloride at 20°C is taken as 4436×10^{-6} c.g.s. e.m.u.[9], then for any cation

$$\chi = 4436 \times 10^{-6}\ D'\ \underline{M}_{NiCl_2} / (\underline{M}\ D'_{NiCl_2}) \qquad (2)$$

where D' is the displacement after application of the correction.

The U(IV) solution was prepared by dissolution of weighed, distilled UCl_4 in oxygen-free hydrochloric acid solution. The last step in the preparation of the neptunium, plutonium, and americium solutions was dissolution of a hydroxide which had been precipitated with ammonium hydroxide. The plutonium concentrations were based on a weighing. The neptunium and americium solutions were assayed by measurement of the rate of alpha particle emission of a small aliquot. The specific activities in counts/min./μg. were taken as 790 for Np[10] and 3.36×10^6 for Am[11] if a thin sample is mounted on platinum and a counter geometry of "50%" is used[12]. These values are said to be probably better than ±5%. If better specific activities are reported at a later date, the magnetic susceptibilities should be corrected proportionately. The quantity of neptunium or plutonium which was not in the desired oxidation state was shown to be less than 1% by measurement of the characteristic optical absorption maxima[13] on a Beckman spectrophotometer.

The 0.03920 M nickel chloride solution which served as magnetic standard was prepared by dissolution of 0.2301 g. of nickel rod (Johnson Matthey and Co., 99.97% Ni) in 5 ml of refluxing 10 M HCl. After the solution had been diluted to 100.0 ml, the excess HCl concentration was found to be 0.360 M.

Although the measured displacements were reproducible to about one scale division, the uncertainty in the molar susceptibilities is about 2% or 30×10^{-6} units, whichever is larger, because of the inaccuracy in determination of actinide element concentration and because of the presence in

the solutions of an unknown amount of diamagnetic ammonium ion. The large negative displacements listed for some examples of solvent only in the rear compartment are due to non-uniformity of the glass capillary. These large negative subtractions do not increase the percent error if the gross displacement of the actinide solution is positive.

Results and Interpretation

Some typical data are given in Table I. In Fig. 2 experimental χ of the actinide element cations are compared with simple theoretical χ_J for the assumed ground quantum states of the electronic configurations $5f^n$ and $5f^{n-1}6d$. The experimental χ follow the χ_J for configurations f^n to a significant degree, though not as closely as had been found for most of the lanthanide cations[14]. The susceptibility of Am(III) is much higher than the theoretical value of zero, but that is also true of the corresponding lanthanide ion, Eu(III). It will be discussed in a later section of this paper. The susceptibilities of the cations are, of course, dependent upon the anion to a secondary degree[3].

The ground states of the cations Np(VI), Np(V), Np(IV), Pu(IV), Pu(III), and Am(III) were concluded to be those on which the theoretical curve B was based, i.e., $^2F_{5/2}$, $^3H_4$, $^4I_{9/2}$, $^5I_4$, $^6H_{5/2}$, and $^7F_0$ respectively as n is 1 through 6.

While the atomic quantum numbers of a state may be those which are expected for a definite configuration, f^n, the state can belong partly to another configuration of the same parity[16]. Susceptibility measurements can show only that the ground state has certain L, S, and J quantum numbers; identification of the state with a configuration is a useful approximate concept. To the extent that quantum states of complicated atoms can be attributed to a single electronic configuration, the known aqueous cations of uranium and higher elements must have as the outer part of their ground

configurations, $5f^n 6s^2 6p^6$ (n 5f electrons which are more or less inside the configuration for the inert gas element 86).

Approximate Nature of Theoretical Calculations

The factors which account for the limited accuracy of our theoretical calculations should be mentioned. Quantum statistically the susceptibility is given by the relation[15]

$$\chi = \frac{I_m}{H} = \frac{N_0}{H} \frac{\sum \partial W_i/\partial H \ \exp(-W_i/kT)}{\sum \exp(-W_i/kT)} \tag{3}$$

where N_0 is Avogadro's number and the summations are over all quantum states of energies W_i. If the energy levels are simply those resulting from the Zeeman splitting of an isolated (on the energy scale) state of a free atom, their energies might be assumed to be

$$W_i - W_i^0 = Hg\beta M \tag{4}$$

where $\beta = eh/4\pi mc$ and $M = J, J-1, --- -J$. Since $2Hg\beta J \ll kT$[4] equation (3) yields

$$\chi_J = Ng^2\beta^2 J(J+1)/3kT^{(17)} \tag{5}$$

If the angular momenta of the several electrons are coupled according to the Russell-Saunders scheme (LS coupling)

$$g = [3J(J+1) + S(S+1) - L(L+1)]/2J(J+1) \tag{6}$$

Equations (5) and (6) were used to calculate the theoretical points of Fig. 2. The ground state of a configuration was assumed by application of Hund's rules. The limited agreement of theoretical and experimental susceptibilities indicates that each paramagnetic atom interacts with other surrounding atoms as well as with the external magnetic field. Since most of the surrounding atoms are diamagnetic, the interaction is probably electrostatic in nature.

Penny and Schlapp attempted to calculate the effect of crystal electric

fields on the magnetic susceptibility of iron group compounds and rare earth salts[18,19]. Qualitatively it is a Stark splitting which is of the order of kT whereas the Zeeman splitting is small compared to kT. Although the calculations are not perfected[20], it is clear that the summation (3) can be much smaller than its evaluation by equation (5). Similarly in solutions the electric fields of neighbor anions and water dipoles will lower the magnetic susceptibility of an actinide element cation compared to its corresponding lanthanide ion since the 5f electrons of the former should be outside the valence shell more often than are the 4f electrons in the latter. Since Np(VI) is essentially a one-electron case, the complications to be mentioned later cannot be important, and the 25% lowering of the susceptibility from the theoretical χ_J must be due to the Stark splitting. It may be assumed that the Stark effect is the most important single complication tending to lower the susceptibility of all the actinide element cations.

Ground quantum states of the $4f^n$ configurations were deduced by Hund[14] from rules which are correct for atoms of small Z in which case it is a good approximation to derive atomic states from the states of individual electrons by means of the LS or Russell-Saunders coupling model (vanishingly weak spin-orbit interaction). In the spectra of gaseous uranium[21,22] the multiplet splitting is wider than the separation of the centers of gravity of LS states. By definition this is strong spin-orbit interaction. The experimental g's of low lying states of the $5f^3 6d 7s^2$ configuration of uranium are fairly close to g_{LS}, however.

It is interesting to see what happens to the energy levels as the spin-orbit interaction increases and the interelectronic interaction approaches the limiting case of jj coupling. Column 2 of Table III lists some states which should lie very low in the configurations $5f^{1-6}$. The

state listed first lies deepest according to Hund's rules. For $5f^2$, $5f^3$, and $5f^4$ the state listed second was selected because it belongs both to the next group according to LS coupling and to the lowest group of jj coupling states. The ground state of $5f^5$ or of $5f^6$ becomes more isolated as jj coupling is approached. In the case of $5f^6$ the two lowest multiplets of ^7F were selected because the spacing between J = 0 and J = 1 would be only 1/21 of the total multiplet splitting according to the Landé interval rule. The relative importance of the probably second lowest states is not known at the present time except that $^7F_1$ must be significantly populated in Am(III) at 20°C.

Theoretical χ_J's for each ground state of the $5f^n$ configurations were calculated for both coupling approximations, and the two results diverge as n increases from 2 to 5. Since the two χ_J's differ directly as g_{LS}^2 and g_{jj}^2 differ, the experimental χ of Pu(III), the example of $5f^5\ {}^6H_{5/2}$, shows unambiguously that g is much nearer to g_{LS} than to g_{jj}. This is consistent with previously mentioned results for the gaseous uranium atom.

Equation (5) depends on the validity of equation (4) for the Zeeman splitting. For each low energy state of Sm(III) and Eu(III) it was necessary[23] to use a more complete equation for χ_J which had been derived by Van Vleck[15] from considerations equivalent to taking the Zeeman splitting to the second order terms in H. He obtained equation (5) with the following added on the right:

$$\frac{N\beta^2}{6(2J+1)} \left\{ \frac{f(J)}{h\nu(J-1:\ J)} + \frac{f(J+1)}{h\nu(J+1;\ J)} \right\} \qquad (5a)$$

$$\text{where } f(J) = \left[(S+L+1)^2 - J^2\right] \left[J^2 - (S-L)^2\right]/J$$

For sufficiently large $h\nu$'s this addition is negligible except that when S and L are large and J is small the $f/h\nu$ terms are extremely large. In the examples

Pu(III) and Am(III) the susceptibilities are greater than theoretical χ_J's for $^6H_{5/2}$ and $^7F_0$ as obtained with equation (5). The $f/h\nu$ terms must be significant for low lying states of both cations. While the $^7F_1$ state must be well populated in Am(III), it is much less so than in Eu(III) where the multiplet splitting is narrower. Thus the same discrepancies with simplest theory that were important in Sm(III) and in Eu(III) can be detected in Pu(III) and Am(III). The analogy is shown clearly in Fig. 3 where experimental susceptibilities of lanthanide and actinide element cations are compared directly.

Acknowledgement

The neptunium and americium were available for this study only through the work of T. J. LaChapelle, L. B. Magnusson, L. B. Asprey, and B. B. Cunningham, who had isolated these materials in very pure form. Many others contributed, of course, to the production of these special materials.[24]

This paper is based on work performed under the auspices of the Atomic Energy Commission at the Radiation Laboratory, University of California.

Table I

Typical Data; Displacements of Capillary

for 40 Ampere Magnet Coil Current

Material in Rear Compart.	Displacement D	Displacement D'	Suscept. e.m.u. x 10^6
0.36 M HCl	-030		
0.0392 M $NiCl_2$ in 0.36 M HCl	+991	1021	4436[a]
0.50 M HCl	-030		
0.0600 M Pu(III) in 0.5 M Cl^-	+099	129	370
0.50 M H_2SO_4	-089		
0.0507 M Pu(IV) in 0.5 M HSO_4^-	+389	478	1610

[a]Magnetic standard, ref. 9.

Table II

Molar Susceptibilities of Actinide Element Cations

at 20°C in Aqueous Solution

Cation in Solution	Anion in Solution	Cation Suscept. e.m.u. x 10^6
U(IV)	0.5 M Cl^-	3690[a]
Np(VI)	0.5 M HSO_4^-	2060
Np(V)	0.2 M Cl^-	4120[a]
Np(IV)	0.2 M HSO_4^-	4000[b]
Pu(IV)	0.5 M HSO_4^-	1610
Pu(III)	0.5 M Cl^-	370
Am(III)	0.5 M NO_3^-	720

[a]For Pu(VI) (same number of electrons as U(IV) and Np(V)) susceptibility is 3540 x 10^{-6}, ref. 6.

[b]For U(III) (same number of electrons as Np(IV)), susceptibility is 4340 x 10^{-6}, ref. 3.

Table III

Theoretical Susceptibilities of Possible Low Energy

States of Actinide Ions

Assumed Elect. Config.	Possible Low Energy States	Theor. χ_J's LS Coupl. 20°C	Theor. χ_J's jj Coupl. 20° C
$5f^1$	$^2F_{5/2}$	2730	2730
$5f^2$	$^3H_4$; $^3F_2$	5420; 1130	6210; 1870
$5f^3$	$^4I_{9/2}$; $^4G_{5/2}$	5540; 1210	7680; 2730
$5f^4$	$^5I_4$; $^5G_2$	3040; 280	6210; 1870
$5f^5$	$^6H_{5/2}$	300	2730
$5f^6$	$^7F_0$; $^7F_1$	0; 1900	0; 1900
5f6d	$^3H_4$; $^3G_3$	5420; 2860	
$5f^2$6d	$^4K_{11/2}$; $^4I_{9/2}$	8950; 5540	
$5f^3$6d	$^5L_6$; $^5K_5$	9070; 5670	
$5f^4$6d	$^6L_{11/2}$; $^6K_{9/2}$	5730; 3130	
$5f^5$6d	$^7K_4$; $^7I_3$	1350; 320	

Fig. 1.--Apparatus for measurement of magnetic susceptibility: A, glass fibers, 0.005 x 140 cm; B, glass capillary, 0.2 x 16 cm; C, magnet pole faces, 2.5 cm diam.; D, mirror and microscope; E, magnet pole pieces, 15 cm diam.

Fig. 2.--Comparison at 20°C of magnetic susceptibilities of actinide element cations with theoretical susceptibilities: A, experimental; B, theoretical for ground states of $5f^n$; C, theoretical for ground states of $5f^{n-1}6d$.

Fig. 3.--Comparison of experimental magnetic susceptibilities of lanthanide and actinide element cations at 20°C. The values for the lanthanides were calculated from some of the "effective magnetic moments" compiled by Yost, Russell and Garner (The Rare Earth Elements and Their Compounds, Wiley, New York, 1947, p. 14.). The point for 61(III) is from the theoretical calculation by Van Vleck and Frank (See ref. 23).

References

1. Now at Brookhaven National Laboratory, Upton, L. I., New York.

2. Some of the properties of the recently discovered heavy transition elements were reviewed and the name actinides was suggested by Seaborg, G. T., Chem. and Eng. News 23, 2190 (1945); Science 104, 379 (1946). Zachariasen, W. H., Phys. Rev. 73, 1104 (1948) used the name actinide for the +3 ions only, thorides for +4 ions, etc., in reporting his x-ray diffraction studies which showed that the solid compounds have the crystal structures and ionic radii consistent with assumption of 5f electronic configurations. We use Seaborg's nomenclature.

3. Lawrence, R. W., J. Am. Chem. Soc. 56, 776 (1934).

4. See reference 5 for keys to this literature.

5. Hutchison, C. A., Jr., and N. Elliott, J. Chem. Phys. 16, 920 (1948).

6. Calvin, M., Plutonium Project Report CK-2411 (1944). Calvin, M., M. Kasha and G. Sheline, AECD-2002 (1948).

7. Connick, R. E., M. Kasha, W. H. McVey, and G. Sheline, "The +5 Oxidation State of Plutonium", Plutonium Project Record, Vol. 14B, No. 3.15 (to be published).

8. Theorell, H., Arkiv Kemi, Minerol., Geol. 16A, No. 1 (1943). Our apparatus was essentially the one used but not described by Lewis, G. N., and M. Calvin, J. Am. Chem. Soc. 67, 1232 (1945).

9. Nettleton, H. R., and S. Sugden, Proc. Roy. Soc. (London) A173, 313 (1939).

10. Magnusson, L. B., and T. J. LaChapelle, "The First Isolation of Element 93 in Pure Compounds and a Determination of the Half-Life of Np^{237}", J. Am. Chem. Soc. (to be published).

11. Cunningham, B. B., Plutonium Project Report CC-3876, Sect. 2.2 (1948).

12. About 52% of the disintegrations are counted. Cunningham, B. B., A. Ghiorso, and J. C. Hindman, "Back-Scattering of Pu^{239} Alpha Particles from Platinum", Plutonium Project Record, Vol. 14B, No. 16.3 (to be published).

13. Hindman, J. C., and D. P. Ames, "Absorption Spectra of Ionic Species of Plutonium", Plutonium Project Record, Vol. 14B, No. 4.1; Hindman, J. C., L. B. Magnusson and T. J. LaChapelle, "Chemistry of Element 93, III. Absorption Spectrum Studies of Aqueous Ions of Neptunium", Ibid., No. 15.2.

14. Hund, F., Z. Physik 33, 855 (1925).

15. Van Vleck, J. H., Phys. Rev. 31, 587 (1928).

16. Condon, E. U., Ibid. 36, 1121 (1930).

17. The small contribution to susceptibility from the magnetic moment induced by the applied field was not added to the theoretical χ_J's. It would be only about -50×10^{-6} for monatomic ions represented by Pu^{+3} and Am^{+3} and possibly as much as $+50 \times 10^{-6}$ for molecular types such as NpO_2^{+} and NpO_2^{++}.

18. Penny, W. G., and R. Schlapp, Phys. Rev. 41, 194 (1932); Schlapp and Penny, Ibid. 42, 667 (1932). These authors pointed out the absence of any fundamental significance of the empirical Weiss-Curie relation, $\chi = C/(T + \Delta)$. Many investigators have calculated "effective atomic magnetic moments" as $\mu_{eff} = (C\ k/N)^{1/2}$ and compared this "experimental" moment with $\mu = g\beta\,[J(J + 1)]^{1/2}$. These μ_{eff} can have no more meaning than C, which sometimes approaches $N\mu^2/3k$ when Δ is nearly zero. It seems preferable to present all results as susceptibilities and then compare theoretical values with the directly observed quantities even though the discrepancies seem twice as great when the device of square root extraction is not used.

19. Frank, A., Ibid. 48, 765 (1935).

20. For more recent discussions see Penny, W. G., and G. J. Kynch, Proc. Roy. Soc. (London) A170, 112 (1939) and Broer, L. J. F., Physica 12, 642 (1946).

21. Kiess, C. C., C. J. Humphreys and D. D. Laun, J. Optical Soc. Am. 36, 357 (1946).

22. Schuurmans, Ph., Physica 11, 475 (1946); Schuurmans, Ph., J. C. van den Bosch and N. Dijkwel, Ibid. 13, 117 (1947).

23. Van Vleck, J. H., and A. Frank, Phys. Rev. 34, 1494, 1625 (1929).

24. See forthcoming Plutonium Project Record, Volume 14A and 14B.

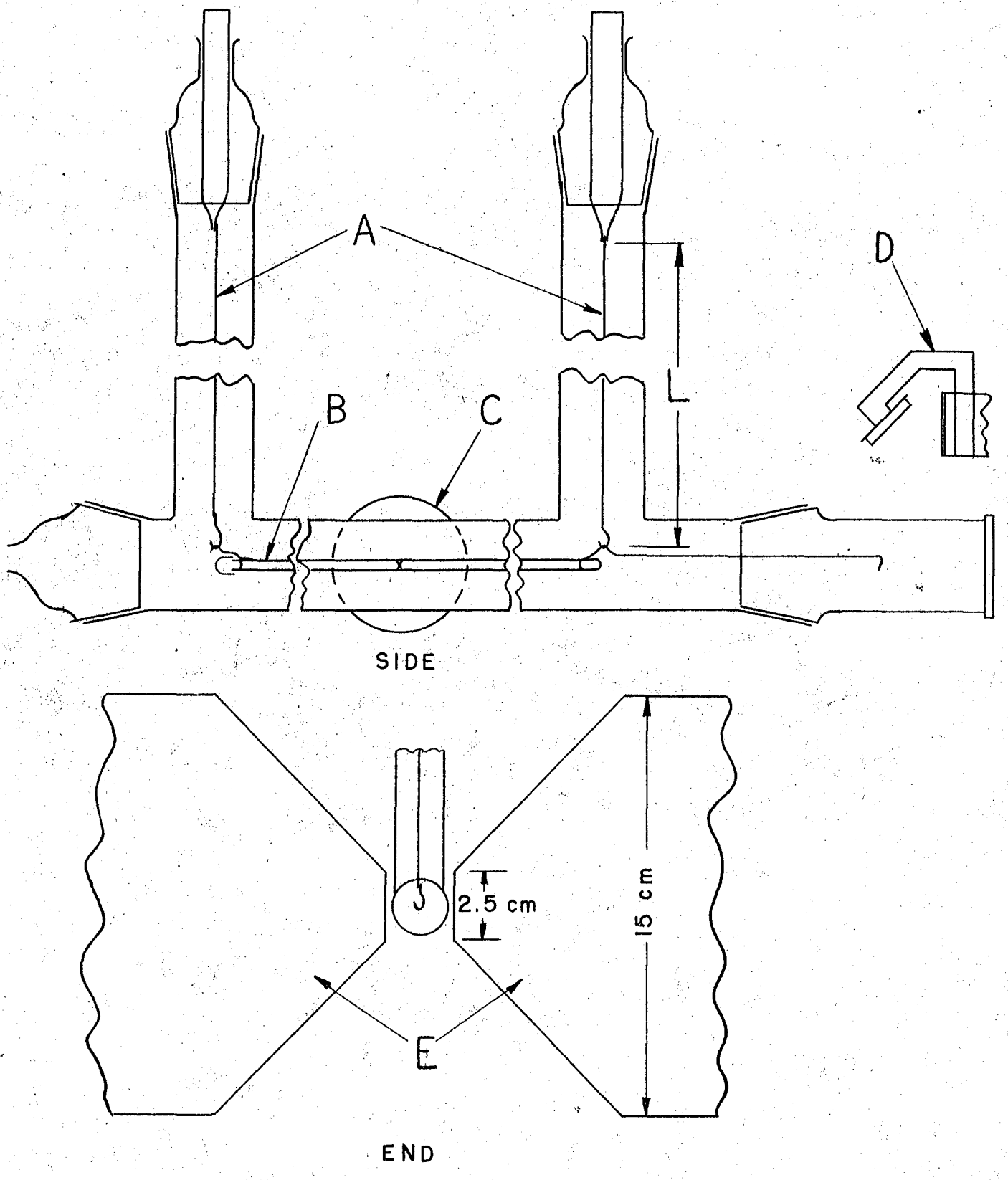

FIG. 1

13011-1

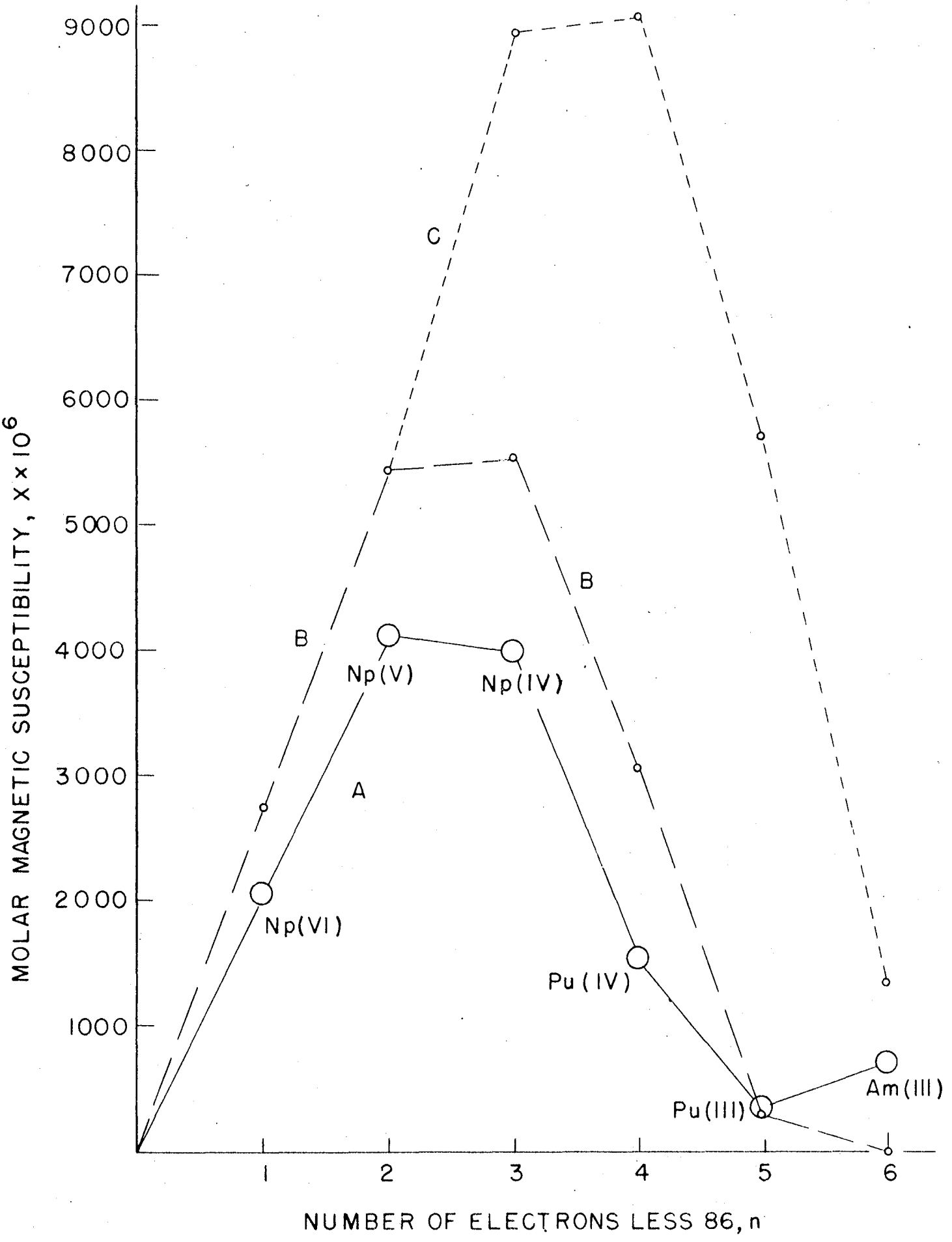
9000
8000
7000
6000
5000
4000
3000
2000
1000
MOLAR MAGNETIC SUSCEPTIBILITY, X × 10^6
C
B
B
A
Np(V)
Np(IV)
Np(VI)
Pu (IV)
Pu(III)
Am(III)
1
2
3
4
5
6
NUMBER OF ELECTRONS LESS 86, n

12997

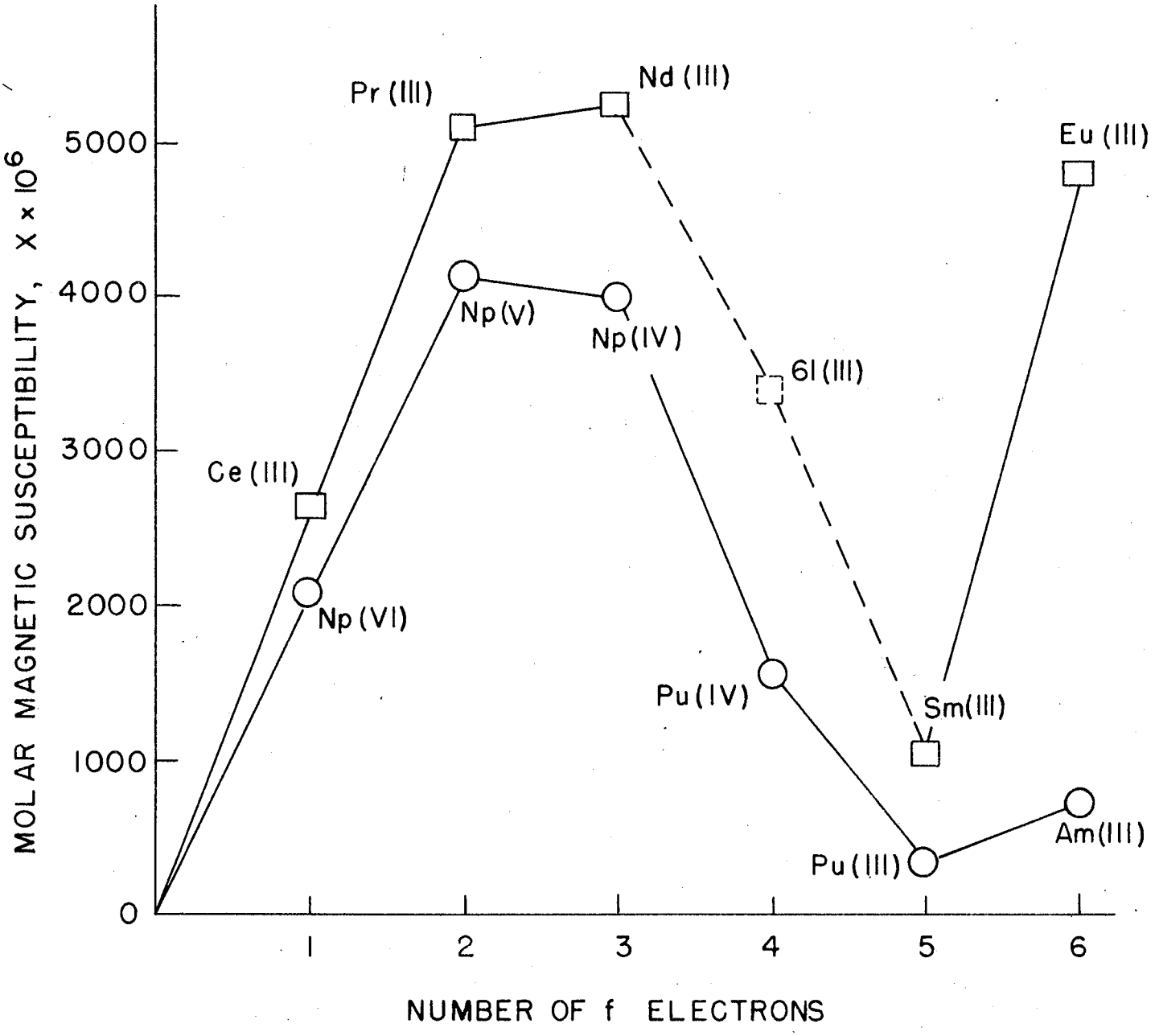
MOLAR MAGNETIC SUSCEPTIBILITY, X × 10^6
5000
4000
3000
2000
1000
0
1
2
3
4
5
6
NUMBER OF f ELECTRONS
Pr (III)
Nd (III)
Eu (III)
Np (V)
Np (IV)
61 (III)
Ce (III)
Np (VI)
Pu (IV)
Sm (III)
Am (III)
Pu (III)

FIG. 3