RECEIVED
LAWRENCE
RADIATION LABORATORY

LIBRARY AND
DOCUMENTS SECTION

UCRL-20857 c.2
UC-37 Instruments
TID-4500 (58th Ed.)

TWO-WEEK LOAN COPY

This is a Library Circulating Copy which may be borrowed for two weeks. For a personal retention copy, call Tech. Info. Division, Ext. 5545

A SOURCE OF ALPHA PARTICLES COLLIMATED TO 35 μm

Stephen E. Derenzo, Dane H. Anderberg, Sharon O. Buckingham, Joseph A. Savignano, Robert G. Smits, Tony Vuletich, Haim Zaklad and Richard A. Muller

June 1971

AEC Contract No. W-7405-eng-48

37

DISCLAIMER

This document was prepared as an account of work sponsored by the United States Government. While this document is believed to contain correct information, neither the United States Government nor any agency thereof, nor the Regents of the University of California, nor any of their employees, makes any warranty, express or implied, or assumes any legal responsibility for the accuracy, completeness, or usefulness of any information, apparatus, product, or process disclosed, or represents that its use would not infringe privately owned rights. Reference herein to any specific commercial product, process, or service by its trade name, trademark, manufacturer, or otherwise, does not necessarily constitute or imply its endorsement, recommendation, or favoring by the United States Government or any agency thereof, or the Regents of the University of California. The views and opinions of authors expressed herein do not necessarily state or reflect those of the United States Government or any agency thereof or the Regents of the University of California.

A SOURCE OF ALPHA PARTICLES COLLIMATED TO 35 μm

Stephen E. Derenzo, Dane H. Anderberg, Sharon O. Buckingham,
Joseph A. Savignano, Robert G. Smits, Tony Vuletich,
and Haim Zaklad

Lawrence Berkeley Laboratory
University of California
Berkeley, California 94720

and

Richard A. Muller

Space Science Laboratory
University of California
Berkeley, California 94720

Abstract

We describe the manufacture of a source of 5.5 MeV alpha particles collimated with gold foil to a width of 35 μm. The source width was measured by using nuclear emulsions and by using a multi-wire liquid xenon ionization chamber.

In a study of the space resolution obtainable with a liquid xenon wire chamber,[1,2] it was necessary to fabricate a well-collimated source of alpha particles. The source holder was to be the flat surface of a microscope objective lens which also served as the cathode of the liquid xenon test chamber (see Fig. 1). The fabrication consisted of five steps: cutting a slot 30 μm deep and 15 μm wide into the quartz objective, preparing an 8 μm diameter radioactive wire, wedging the wire into the slot, applying a conductive coating to the lens, and then glueing a piece of gold foil 15 μm thick on each side of the slot.

A brass disc 0.050 in. thick and 1.25 in. diam was mounted on a 10 in. metal lathe. The edge of the disc was sharpened so that it had an included angle of 15 degrees. The rotating disc was brought to the surface of the quartz, and diamond dust of 8,000 grit (approx 2 μm in diam) was applied as the slot was formed. In order to keep the cutting edge of the disc true to its axis of rotation, the disc mounting was not disturbed between the sharpening and cutting operations. Previous attempts to make the slot by using a razor blade in an ultrasonic drill or by using a rotating sharpened steel disk produced slots with rough edges. The brass disk was superior because the diamond grit became embeded in its surface.

A platinum wire 13 μm diam and 10 mm long was prepared by repeatedly plating it with ^{241}Am, followed each time with a 900°C bake for 10 sec until the activity reached 3×10^5 counts per minute. The objective lens was masked with gummed plastic tape, leaving only the slot that would receive the wire. A piece of the radioactive wire, approx 800 μm long, was cut off and wedged into the slot with a dulled razor blade. The last operation was done with the aid of a microscope

in an open front hood; the operator wore gloves, apron, and respirator for prevention of possible contamination. The objective was heated to 500°C in a furnace, and then stannous chloride vapor was blown onto it to produce a conductive coating of 500 to 1,000 ohms per square. A scanning electron microscope was used to check the slot width and depth, as well as the position of the wire.

The source was tested mechanically by tapping it on a hard surface, by blowing air onto it from a 100 psig supply and by repeated emmersion in liquid nitrogen. The wire remained securely lodged in place.

Two pieces of gold foil 1 mm× 1mm in size and 10 μm thick were positioned on each side of the slot. The foils were held in place with small weights as Eastman Kodak 910 cement was allowed to spread between the foil and the quartz.

A nuclear emulsion was used to verify that the source had been collimated to 35 μm (see Fig. 2). The source distribution was also measured by using a multi-wire liquid xenon ionization chamber.[2] The measurement shown in Ref. 2 was made using a source which did not have the gold foil collimation. Consequently, the source was seen to have a width of 50 μm.

This source provides a count rate of 30 alphas per second. A source with similar characteristics could be achieved by vacuum deposition of a coatingof ^{241}Am on the quartz and then collimating with gold foil, but a surface intensity of 10^7 counts/min/sq mm would be required. Vacuum deposition is thus extremely inefficient when compared to the method of electroplating the source onto a small wire and then inserting the wire into a groove.

We thank Harry Heckman and Robert Smith for providing us with nuclear emulsions and advice on their use. Work done under the auspices of the U. S. Atomic Energy Commission and the National Aeronautics and Space Administration.

References

[1] Luis W. Alvarez, The Use of Liquid Noble Gases in Particle Detectors, in Group A Physics Note 672, Nov. 1968, Lawrence Berkeley Lab.

[2] Richard A. Muller, Stephen E. Derenzo, Gerard Smadja, Dennis B. Smith, Robert G. Smits, Haim Zaklad, and Luis W. Alvarez, Phys. Rev. Letters 27, 532 (1971).

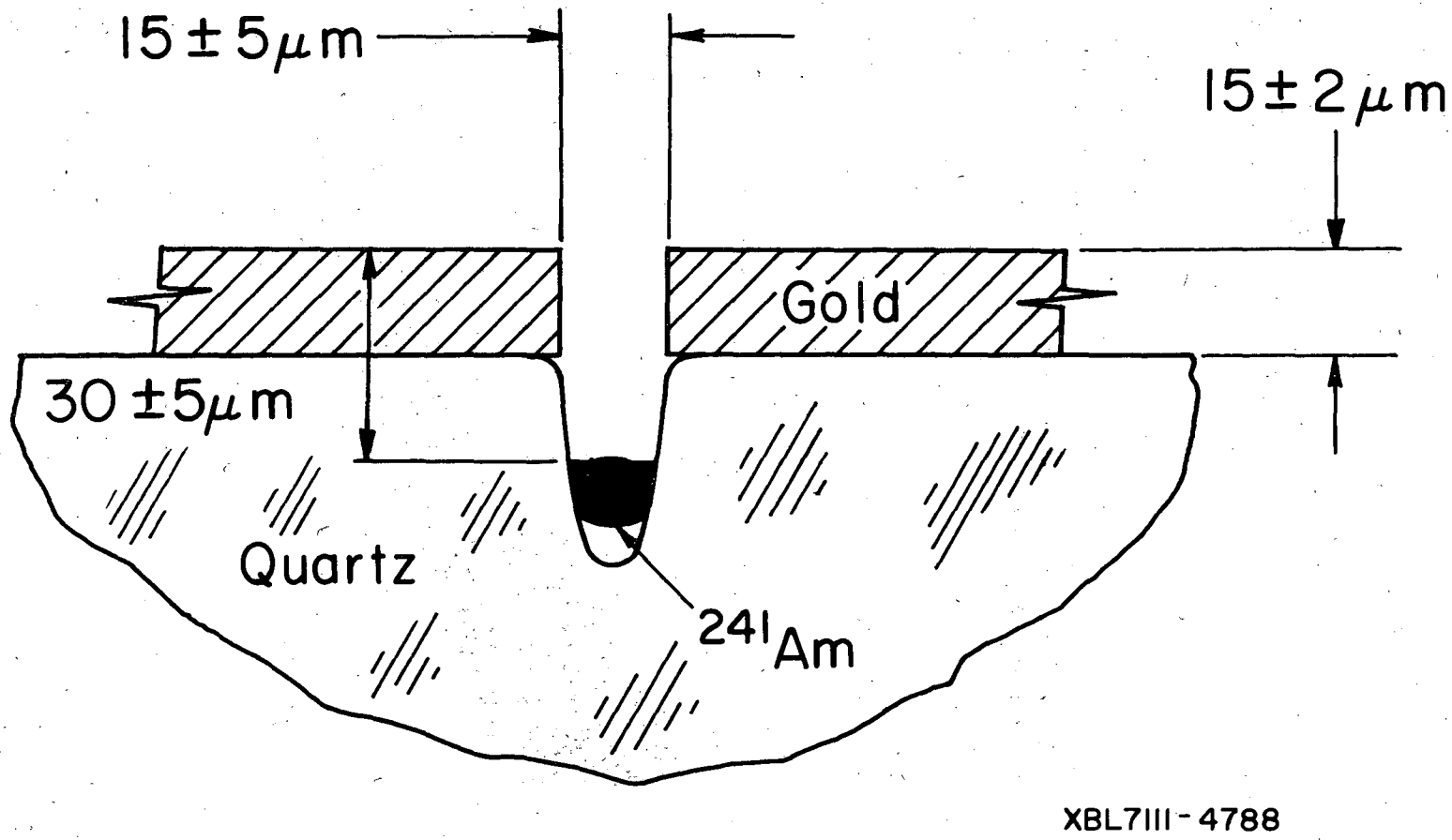

Fig. 1. Structural detail of collimated alpha source.

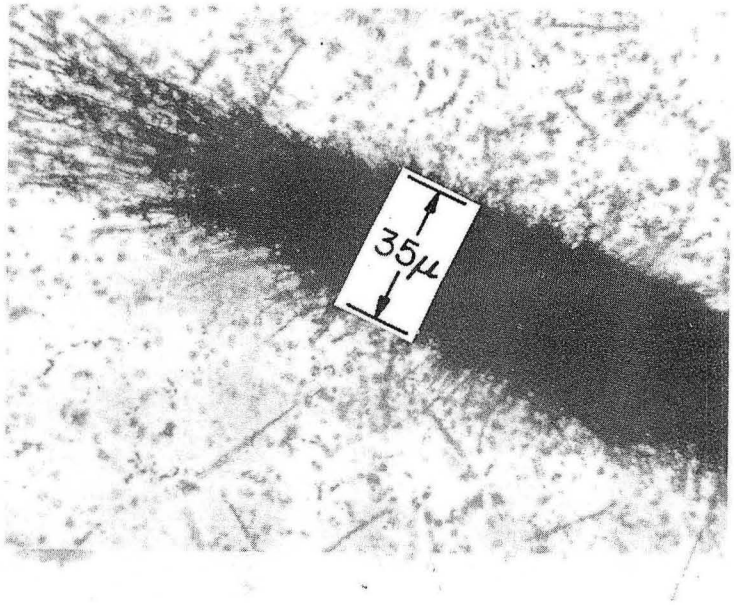

XBB 7112 5792

Fig. 2. Photomicrograph of alpha tracks in nuclear emulsion to verify width of collimated alpha source.

LEGAL NOTICE

This report was prepared as an account of work sponsored by the United States Government. Neither the United States nor the United States Atomic Energy Commission, nor any of their employees, nor any of their contractors, subcontractors, or their employees, makes any warranty, express or implied, or assumes any legal liability or responsibility for the accuracy, completeness or usefulness of any information, apparatus, product or process disclosed, or represents that its use would not infringe privately owned rights.

TECHNICAL INFORMATION DIVISION
LAWRENCE BERKELEY LABORATORY
UNIVERSITY OF CALIFORNIA
BERKELEY, CALIFORNIA 94720