SECRET
SECURITY INFORMATION

UCRL-2097

DECLASSIFIED

UNIVERSITY OF CALIFORNIA — BERKELEY

TWO-WEEK LOAN COPY

This is a Library Circulating Copy which may be borrowed for two weeks. For a personal retention copy, call Tech. Info. Division, Ext. 5545

RADIATION LABORATORY

SECRET
SECURITY INFORMATION

DISCLAIMER

This document was prepared as an account of work sponsored by the United States Government. While this document is believed to contain correct information, neither the United States Government nor any agency thereof, nor the Regents of the University of California, nor any of their employees, makes any warranty, express or implied, or assumes any legal responsibility for the accuracy, completeness, or usefulness of any information, apparatus, product, or process disclosed, or represents that its use would not infringe privately owned rights. Reference herein to any specific commercial product, process, or service by its trade name, trademark, manufacturer, or otherwise, does not necessarily constitute or imply its endorsement, recommendation, or favoring by the United States Government or any agency thereof, or the Regents of the University of California. The views and opinions of authors expressed herein do not necessarily state or reflect those of the United States Government or any agency thereof or the Regents of the University of California.

UNIVERSITY OF CALIFORNIA
Radiation Laboratory

Cover Sheet
Do not remove

INDEX NO. UCRL-2097
This document contains 38 pages
This is copy 11 of 19 series A

DECLASSIFIED

Issued to Information Division

SECRET
SECURITY INFORMATION
Classification

Each person who receives this document must sign the cover sheet in the space below.

Route to	Noted by	Date	Route to	Noted by	Date
B Moore	[illegible]				
W Latimer	[illegible]				
J. Woodyard	J R Woodyard	6-24-53			

I-5(M)

DECLASSIFIED

SECRET
SECURITY INFORMATION

UCRL-2097
Materials Testing
Accelerator Distribution

UNIVERSITY OF CALIFORNIA

Radiation Laboratory

Contract No. W-7405-eng-48

CLASSIFICATION CANCELLED
BY AUTHORITY OF THE DECLASSIFICATION BRANCH USAEC
BY B Foskett 6-4-56
SIGNATURE OF THE PERSON MAKING THE CHANGE — DATE

MTA QUARTERLY PROGRESS REPORT

September, October, November, 1952

February 2, 1953

SECRET
SECURITY INFORMATION

RESTRICTED DATA

This document contains restricted data as defined in the Atomic Energy Act of 1946. Its transmittal or disclosure of contents in any manner to an unauthorized person is prohibited.

Berkeley, California

Standard Distribution: Series A	Copy Numbers
Atomic Energy Commission, Washington	1 - ~~5~~ 2
California Research and Development Company	~~6 - 10~~ 3-7
Patent Branch, Washington	~~11~~ 8
San Francisco Operations Office	~~12~~ 9
University of California Radiation Laboratory	~~13 - 17~~ 10 - 14
Technical Information Service, Oak Ridge	~~18 - 22~~ 15 - 19

Previous M. T. A. Quarterly Reports:

No. 1	UCRL-1009, March through August 1950
No. 2	UCRL-1137, September through November 1950
No. 3	UCRL-1297, December 1950 through February 1951
No. 4	UCRL-1436, March through May 1951
No. 5	UCRL-1573, June through August 1951
No. 6	UCRL-1680, September through November 1951
No. 7	UCRL-1774, December 1951 through February 1952
No. 8	UCRL-1903, March through May 1952
No. 9	UCRL-2043, June through August, 1952

The above listed reports cover the joint efforts of the Radiation Laboratory and the California Research and Development Company on the M. T. A. Program. The present report is restricted to work done by Radiation Laboratory personnel only, as will future reports in this series. Independent progress reports will be issued by the California Research and Development Company covering work at the Livermore Research Laboratory on the program.

INFORMATION DIVISION
Radiation Laboratory
University of California
Berkeley, California

TABLE OF CONTENTS

		Page No.
1.	MARK I SPARKING	4
2.	HIGH VOLTAGE BREAKDOWN	5
3.	SPARK DAMAGE AND HIGH VOLTAGE BREAKDOWN OF METALS IN VACUUM AT 14 MEGACYCLES	6
4.	RF DESIGN OF MTA LINEAR ACCELERATOR	7
5.	BEAM DYNAMICS IN STRONG-FOCUSSING LINEAR ACCELERATORS	8
6.	TARGET DESIGN THEORETICAL STUDIES	9
7.	TARGET PHYSICS PROGRAM	11
	Evaporation Neutron Spectrum from Uranium Bombarded by 190 Mev Deuterons	11
	He^3 Purification System	13
	Improved Ion Chamber	14
	Improved Faraday Cage	15
	BF_3 Counter Experiments	15
	Time of Flight Neutron Spectrometer	16
8.	HIGH FREQUENCY PROGRAM	23
9.	DYNAMICAL PROPERTIES OF MARK I	34
10.	M. T. A. MECHANICAL DESIGN	36
11.	ELECTRON MODEL CYCLOTRON STUDIES	38

DECLASSIFIED

SECRET
SECURITY INFORMATION

1. MARK I SPARKING

E. J. Lofgren

On the basis of experiments done in XC and reported in UCRL-1962 an Inconel overlay was attached to the opposed surface of drift tubes zero to one. Voltage breakdown and consequent damage to these surfaces had previously been the limiting factor on Mark I operation. For structural reasons it was not possible to attach the overlay in thermal contact with the copper surfaces, therefore the back surfaces of the overlays and the portion of drift tubes zero to one covered by them were blackened with a nickel-molybdate coating to increase radiation cooling.

Mark I performance with these overlays was much better than on any previous run. Potentials as high as 23 Mv were reached and at 21 Mv operation was steady. These values are three to five million volts higher than those obtained with comparable stability without the overlay. It is also significant to note that when there was a flurry of sparks it was possible to recover to the previous voltage in relatively short time. In the case of copper there was a constant deterioration. At the end of the run it was found that damage to the surfaces was limited to two areas. The first was at the Inconel-copper boundary where there was typical copper damage. The second was at the bore tube of one where a hole was burned through the Inconel. Conditions in this region were especially severe since conditions for radiant cooling are not good, gradients are higher than average, and there is a heat load due to beam lost at injection. The remaining surface was in very good condition.

SECRET
SECURITY INFORMATION

2. HIGH VOLTAGE BREAKDOWN

H. G. Heard

SPARK INITIATION

Structure of Gap Current. During this quarter measurements of gap current as a time function for pulsed and d-c breakdown showed that the rate of current rise is a function of electrode spacing. The total gap current has a rise structure which has been found to depend upon electrode spacing.

Pulsed Breakdown X-rays. Measurements of pulsed breakdown have shown that this phenomenon is similar to the d-c case in that x-ray loading precedes gap breakdown.

Triggered Sparks. It has been shown that sparks can be initiated by a secondary triggered gap within the vacuum system. The delay between the firing of the secondary gap and the actual spark is of the order of milliseconds to seconds and is of the order of the free-fall time of particles created in the secondary gap.

The fact that the initiated sparks never occurred coincident (within the velocity of light) with triggered sparks is taken as evidence against the photon-photoelectron initiation mechanism of vacuum breakdown. This is in agreement with the observation that microsecond pulses of a peak amplitude of 10^7 lumens from a xenon flash lamp (through a quartz window) do not cause a multiplying build-up in non-sparking gap current.

ELECTRODE MATERIALS

Nickel Molybdate. After spark conditioning the use of a nickel molybdate coating does not affect the measured breakdown voltage of Inconel. Since this coating does induce high sparking rates, electrodes could easily become damaged during bake-in in a system of large stored energy.

Nickel Steel. A 32 percent nickel steel material has been tested as a comparison to Invar. After spark conditioning this metal was found to breakdown at approximately 20 percent lower voltage than Invar for the same conditions. This illustrates how markedly the breakdown voltage of electrode materials can be altered by small changes in constituents.

This is an abstract of UCRL-2051, now in preparation.

3. SPARK DAMAGE AND HIGH VOLTAGE BREAKDOWN OF METALS IN VACUUM AT 14 MEGACYCLES

Paul R. Byerly, Jr., Warren W. Chupp, and
Harry G. Heard

This report covers a continuation of work reported in UCRL-1962. Approximate breakdown voltages and spark damage estimates have been made for the metals Ag, Ti, Aluminum Alloy 52-SO, Stainless Steel 316 and various combinations of Inconel and Cu.

The geometry and experimental conditions are the same as those previously employed, i.e., a cylindrical electrode centrally located between parallel plates all within a 14 megacycle cavity. A strong magnetic field (15,000 gauss) is directed along the common normal to the side plates and stem. Voltages of the order of one megavolt are applied.

This is an abstract of UCRL-2053, now in preparation.

4. RF DESIGN OF MTA LINEAR ACCELERATOR

S. W. Kitchen, A. D. Schelberg, and B. V. Hill
by
Myron Good

The results, as well as the measurement techniques, of the rf cavity design program for A-12 have been summarized and organized into reports. Preliminary thinking has been done on various schemes for incorporating strong-focussing into a modified MTA linear accelerator.

As a part of the above efforts, a report, UCRL-2021, was prepared, tabulating final rf design data for A-12, along with similar data for two other possible machines. One of these is a 24 megacycle version of A-12, (designated A-24), for which design data is obtained by the use of simple scaling laws. The other is the quarter-wave line machine discussed by Brobeck in UCRL-1968, the design data being taken from that report.

5. BEAM DYNAMICS IN STRONG-FOCUSSING LINEAR ACCELERATORS

S. Gasiorowicz, Myron Good, and Lloyd Smith

An investigation has been started of beam dynamics in a linear accelerator with strong focussing. The immediate goals are to determine the bore diameter necessary to accelerate a given current, the best energy for injection into the accelerator proper, and the best way of pre-accelerating the ions to the necessary injection energy. We are considering accelerators in the frequency range 20 to 200 mc. with an output current of about 100 ma.; the final energy is not a major concern in studying beam dynamics, for the major difficulties occur at the low energy end. The major effort has been devoted to a study of the influence of the large rf and space charge defocussing forces at the low energy end, to see if they can be counteracted by reasonable strong focussing magnetic or electric fields. The results are reasonably encouraging, although it may be necessary to provide a bore diameter considerably larger than the input diameter of the beam and to introduce an extra d.c. boost immediately following the ion source. When cost estimates are made on the various present proposals, it is planned to start a detailed study of the favored ones with the help of the differential analyzer.

In the main accelerator the only obstacle that has arisen is a possible longitudinal space charge effect; that is, because the ion bunch is confined in the transverse direction, the space charge forces might extend the bunch longitudinally to the point of upsetting phase stability. This point is being investigated in some detail, although at the moment it is not expected to be very serious.

6. TARGET DESIGN THEORETICAL STUDIES

Warren Heckrotte

The principal theoretical work on the MTA target design program has been concerned with the interaction of high energy nucleons with heavy nuclei. Assistance was given to CRD in setting up Monte Carlo type calculations designed to yield for the above problem the following information: the energy transfer to the target nucleus and the angular and energy distribution of knock-out nucleons.

In this work several physically plausible assumptions are made. The nucleus is assumed to be a Fermi gas at zero temperature. The incident nucleon is assumed to interact with the individual nucleons as it would were they free (i.e., the free nucleon-nucleon cross sections are used), but only those collisions which are compatible with the exclusion principle are allowed.

Because the incident nucleon may make many collisions within the nucleus, the problem is not amenable to standard analytical treatment. However, the problem is amenable to the Monte Carlo type calculation, where one follows in detail the path of an incident nucleon through the nucleus deciding on the course of events by a proper choice of random numbers. The whole process is then repeated for a large number (of the order of hundreds) of incident nucleons and yields results of a fair order of accuracy. This procedure is discussed in detail by M. L. Goldberg (Phys. Rev. 74, 1269 (1948)).

Preliminary calculations are in progress with the IBM calculating machine at CRD.

Once the above physical assumptions are made the problem is numerically determinable to any order of accuracy. There is, of course, some question as to the applicability of these assumptions. Although there have been several such calculations by various people there has been no clear cut comparison with experimental results, which could serve as an empirical test. Leaving aside, for the moment, the nuclear model, the assumption regarding the interaction of the incident nucleon with the nucleus, amounts to a classical treatment of the problem. One neglects any effect of the binding energy of the nucleons in the nucleus, and the interference of waves scattered from neighboring nuclei in the nucleus. While the neglect of the effect of the binding of the nucleon in the nucleus is justified for incident nucleon energies greater than about 100 Mev, there seems to be no clear cut answer regarding the neglect of the interference effect. Accordingly a simple investigation of the multiple scattering of waves from a collection of particles is being made in order to obtain some idea of its importance; in particular, to determine what sort of error is made by neglecting such interference effects.

The representation of the nucleus as a Fermi gas is no doubt sufficient for nucleon energies of the order much greater than the binding energy. There is some question though whether one should take the temperature to be zero. Preliminary calculations with an excited Fermi distribution indicate that the energy distribution of scattered nucleon which has suffered only one collision in the nucleus compares more favorably with experiment when a ground state temperature of about 10 Mev is assigned.

7. TARGET PHYSICS PROGRAM

C. M. Van Atta

Evaporation Neutron Spectrum from Uranium Bombarded by 190 Mev Deuterons

Marian N. Whitehead and Frank L. Adelman

The measurement of the fast neutron spectrum from thin uranium targets bombarded by 190 Mev deuterons has been concluded. For neutron energies from one to ten Mev proton recoils in nuclear emulsions were used as detectors; from 0.3 to 4 Mev additional data were obtained from proton recoils in a hydrogen filled cloud chamber. As the first progress report on the nuclear plate work was made some time ago, the experimental procedure used for this phase of the work will be reviewed; the experimental procedure for the cloud chamber experiment has not been reported before.

Nuclear Plate Experiment

A schematic diagram of the setup for the plate exposures is shown in Fig. 1. Ilford C-2 nuclear track plates were placed at 45°, 90°, and 135° to the incident 190 Mev deuteron beam; the 1/16 inch uranium target was fixed at an angle to the beam in order that the 90° point could be obtained. Neutrons from the target impinged upon the surface of the emulsion at an angle of approximately 3 degrees.

With the aid of the standard techniques for microscopic examination of nuclear plates, the range of each proton recoil track lying within a small area of the emulsion was measured, and the angle between the track and the line from target to the plate was recorded. Protons were accepted only if they lay within a twenty degree cone in the forward direction (i.e., away from the target).

The lower energy limit was set at 1 Mev because the proton tracks in the emulsion for any lower energy are so black that the direction of proton travel is obscured, and are so short that measurements of direction become unreliable. As the energy of the neutron increases, the collection of a significant number of tracks becomes more difficult because of the increasing range of the recoils; at 8 Mev the range is twice the emulsion thickness. Therefore, the higher energy protons have a greater probability of escaping through the emulsion.

The probability of escape of the recoil protons can be calculated as a function of the neutron energy by using strictly geometrical arguments and the known angular distribution of n-p scattering at these energies.

Once the escape probability is known, N_n, the number of neutrons per cm^2

of plate can be calculated from N_p, the number of proton recoils per cm^2 measured in the emulsion

$$N_n(E) = \frac{N_p(E)}{\sigma(E)\,\rho_H K} \text{ neutrons cm}^{-2}\text{ Mev}^{-1} \qquad (1)$$

In this equation, $E = E_p/\cos^2\theta_p$, is the neutron energy; $\sigma(E)$ the neutron-proton scattering cross section; ρ_H the density of hydrogen in the emulsion; and K is the correction for the probability of escape of a proton scattered by a neutron of energy E.

The spectra at the three angles were identical, as would be expected for neutrons "evaporating" from an excited nucleus. In order to improve the statistics of the experimental points the data for the different angles have been combined to obtain the final curve.

In this experiment the deuteron beam was monitored using an argon ionization chamber. The absolute number of deuterons passing though the target was made uncertain by recombination in the chamber. Therefore, another run was made using aluminum foils as monitors. The Na^{24} activity of these foils has been calibrated against a Faraday cup by Roger Batzel of the CRD Nuclear Chemistry Group and is accurate to about 3 percent. Comparison of the integral cross section from 1-6 Mev at 135° from this run with the corresponding integral from the previous run enables one to put the latter on an absolute scale.

Cloud Chamber Experiment

This experiment was done in conjunction with Professor Powell's cloud chamber group. The "pantagraph" chamber, which is in a pulsed magnetic field of 14,300 gauss was filled with a mixture of hydrogen and water vapor and placed outside the "cave" wall so as to see neutrons coming from a thin uranium target at 90°. The experimental arrangement is shown in Fig. 2.

The determination of the neutron flux from the proton recoils is essentially the same as in the plate experiment. The only difference is that the energy of a recoil proton was determined either by its range in the gas or by measuring its radius of curvature in the magnetic field.

This data was normalized to the plate data from 1-5 Mev, as an absolute measurement of the deuteron beam was not possible in the cloud chamber arrangement.

Experimental Results

The combined energy spectrum from the two methods is shown in Fig. 3. The errors shown are statistical standard deviations only. The cross section has been multiplied by 4π under the assumption of spherical symmetry of the

production process. The source of these neutrons is believed to be an evaporation process from nuclei which are left excited as a result of a previous interaction of a deuteron with a uranium nucleus. The solid curve shown on the graph was calculated by Warren Heckrotte using the Monte Carlo method and the Weisskopf evaporation model with an initial nuclear excitation of 100 Mev. The deviation of the experimental points around one Mev from the theoretical curve may be due (a) to the contribution of fission neutrons from nuclei with a few Mev excitation energy, and (b) to the spread of initial excitation energies.

The total cross section from zero to 11 Mev is 27.8 barns. The probable error is of the order of 20 percent, based on experimental errors and estimates of the scanning errors. This value is in good agreement with the 28 ± 3 barns obtained by Crandall et al. from water tank measurements. The average energy of the neutrons in this energy region is 2.8 Mev.

He^3 Purification System

John Ise, Jr. and George P. Millburn

During the past three months the emphasis of the MTA target program has been on the production of and measurement with an external beam of 330 Mev deuterons stripped from doubly-ionized 500 Mev He^3 ions, as proposed originally by Luis Alvarez.

The first step in the program was clearly to see if a continuous flow of He^3 could be admitted to the cyclotron, collected from the Kinney pumps backing the diffusion pumps, purified of all contaminants picked up in the cyclotron and elsewhere, and re-admitted to the cyclotron, all without a significant loss of the original He^3 over a period of several hours. In order not to interfere with the normal operation of the cyclotron this was done on several nights after the cyclotron has been shut down, and without the operation of the rf system, the modifications of which, to cover the frequency range necessary for acceleration of He^3, having not yet been completed. Ordinary helium was admitted from a brass reservoir to the filament probe (through a liquid nitrogen-cooled charcoal trap) in quantities five to ten times greater than in normal operation of the cyclotron and was re-collected from the exhaust manifold of a 100 CFM Kinney pump and pumped with a smaller Kinney pump through another liquid nitrogen-cooled charcoal trap into the reservoir. These night runs lasted from five to eight hours, equivalent to several days of ordinary operation. The pressure of gas in the brass reservoir was read before and after the run by means of a Bourdon gauge, and a small sample of this gas was analyzed for purity with a mass spectrograph. The results of these runs gave a loss of about 2 percent in every 100 hours of normal operation, with an essentially perfect purification from other gases.

After these encouraging preliminary measurements, and after the necessary modifications of the r-f oscillator, several actual runs have been made using a quantity of 4 percent He^3-96 percent He^4 gas obtained from Oak Ridge. These later runs have indicated that the loss quoted above is definitely maximal, probably being caused by insufficient pumping out of the lines from the cyclotron to the large Kinney and back to the reservoir, after the gas has been shut off from the filament probe. One annoying leak has been found sporadically at the rotating shaft seal of the large Kinney backing pump, but as this would cause air to leak into the closed system instead of helium out of the system, its only adverse effect has been to overload the charcoal adsorption traps, thus reducing the purification efficiency and hence lowering the beam. The best external 330 Mev deuteron beam obtained to date has been about 10^{-13} amperes.

A fuller discussion of the details involved in the purification method, as well as a discussion of the various difficulties experienced and their eventual disposal, is being written as a separate UCRL report.

Improved Ion Chamber

John Ise, Jr.

The long-standing difficulty with the existing beam-monitoring, argon-filled ion chambers has been an apparent recombination of ions at high beam densities. Since the recombination should theoretically be negligible at the highest beams obtainable, provided there is no electron attachment and subsequent heavy ion recombination, this effect was tentatively diagnosed as being due to impurities in the argon, either initially present, or arising from the rubber gaskets, Lubri-seal, residual solder flux, etc., in the chamber itself. To the end of eliminating this effect, an all-metal and glass ion chamber was built, using teflon insulators and large Kovar glass seals, sealed with a metal wire gasket and filled with helium, using the same type of liquid nitrogen-cooled charcoal purification trap used in the He^3 cyclotron vacuum system described in the previous section. On the day that the ion chambers were to be calibrated, the Faraday cup was not in operation, and only a relative calibration of the new chamber with one of the old ones could be obtained. These preliminary results indicate that the new chamber showed no recombination at beam densities five times higher than the old chamber would accurately measure. This was the highest beam available on that day.

A complete report on this chamber is being written and will be published as a UCRL report.

Improved Faraday Cage

John Ise, Jr.

The Faraday cage heretofore used has been unreliable for beams below 10^{-13} amperes, due partially to the long cables from the cage itself to the electrometer in the counting area, with the consequent electromagnetic pickup and plastic deformation noise, and partially to the VX33 electrometer tube used. The grid current of this tube is listed as 2×10^{-14} amperes, which means that at best beams of a few times 10^{-14} amperes could be successfully measured.

A new Faraday cage is being constructed, with a VX41A electrometer tube (grid current 2×10^{-15} amperes) inside the vacuum. The lines from the cage to the counting area are thus at low impedance. The various condenser and resistor outputs from the Faraday block to the electrometer are thrown in electrically by means of VX10 thermal switches, all chosen to have leakage resistance greater than 2×10^{-14} ohms. The condensers used have all been chosen with leakage resistances greater than 10^{15} ohms. A wire gasket is used to minimize outgassing.

A full report of the construction and operation of this Faraday cage will be written and issued as a UCRL report.

BF_3 Counter Experiments

Walter E. Crandall, John Ise, Jr., and George P. Millburn
UCRL
W. Birnbaum, D. A. Hicks, R. M. Main, and A. V. Shelton
CRDC

New techniques were employed in measuring the angular distribution of neutrons with BF_3 counters (LWS-24582 and UCRL-1415). The agreement with former measurements was very good with the exception of a difference in the forward direction, which has not yet been definitely verified.

The major improvement made was in the method of measuring the background. Instead of removing the target, a method which introduces a spurious source of neutrons at the rear of the cave, the target was left in position in a 12-in. paraffin plug backed by 1/2 in. of boron carbide was placed over the front of the counter. As shown in Fig. 4, the plug attenuates out all the neutrons entering the front of the counter. This background then measures the number of neutrons entering the counter from the side and back. It is still not a "true" background, for it does not separate neutrons which are emitted from the target from neutrons which are emitted by other sources, such as the shielding,

in the cyclotron. The geometrical effects (reflection of neutrons by the walls of the cave into the counter) are at least partially compensated by the calibration with a Ra-Be source.

A more nearly correct background could be obtained by surrounding the target with a neutron-absorbing blanket, such as a boric acid solution. The increased reliability of the experiment which probably could be so attained is not thought to be worth the extra effort, unless total yield experiments with the high energy deuterons stripped from He^3 cannot be done with the $MnSO_4$ tank (UCRL-2063).

The distance between the counter and the target was increased to 10 ft. for one measurement. The results are shown in Fig. 5, a plot of the angular distribution (I/I_d $dn/d\Omega$ vs θ), and in Fig. 6, I/I_d $dn/d\Omega$ $\sin\theta$ vs θ, which gives a total yield of 3.0 neutrons per deuteron.

These results also agree well with a later measurement using a 4-1/2 ft. arm between the counter and the target. This arm was chosen so as to achieve adequate counting rates with the low intensity of stripped deuterons from He^3 acceleration. These results will probably be completed in the next few months.

Time of Flight Neutron Spectrometer

Walter E. Crandall, John Ise, Jr., and George P. Millburn
UCRL
W. Birnbaum, D. A. Hicks, R. M. Main, and A. V. Shelton
CRDC

A time of flight neutron spectrometer, based on a bridge coincidence circuit developed by L. Neher, is now being tested. A detailed report of the theory and operation will be presented at a later date.

The time resolution of the coincidence circuit has been measured to be 10^{-9} seconds under optimum conditions. Unfortunately the resolution becomes poorer when random small pulses, similar to those which will be encountered under actual operating conditions, are fed into the coincidence circuit. An improved limiter circuit which will reduce all pulses to a common height is required, but due to the rapid response such a circuit is difficult to construct. To construct such a limiter circuit systematically, a pulser, capable of generating equal pulses of $\sim 10^{-9}$ second duration, has been built. In addition, an oscilloscope is being modified to make it possible to observe such fast pulses. With these tools it will then be possible to optimize the circuit design, although it may not be possible to obtain a limiter having all the desired features.

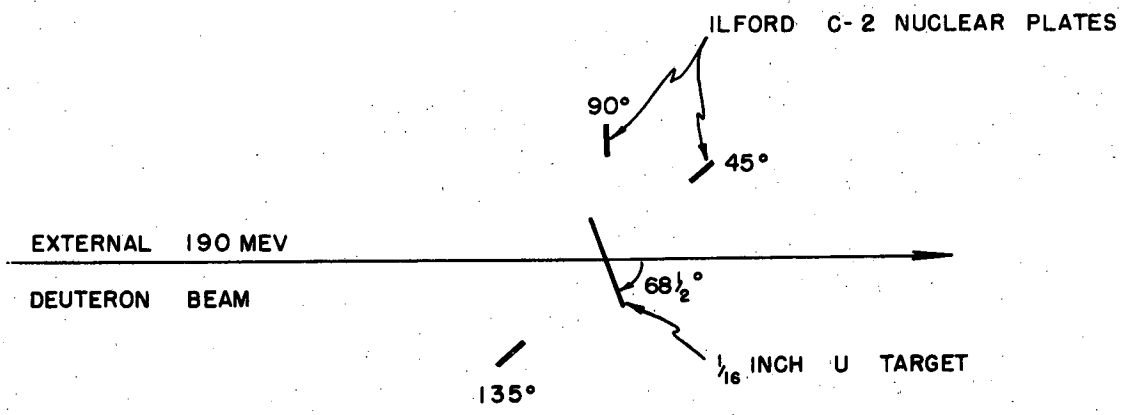

SCHEMATIC DIAGRAM OF PLATE EXPOSURE

SECRET

MU 4202

FIG. 1 SECTION 7

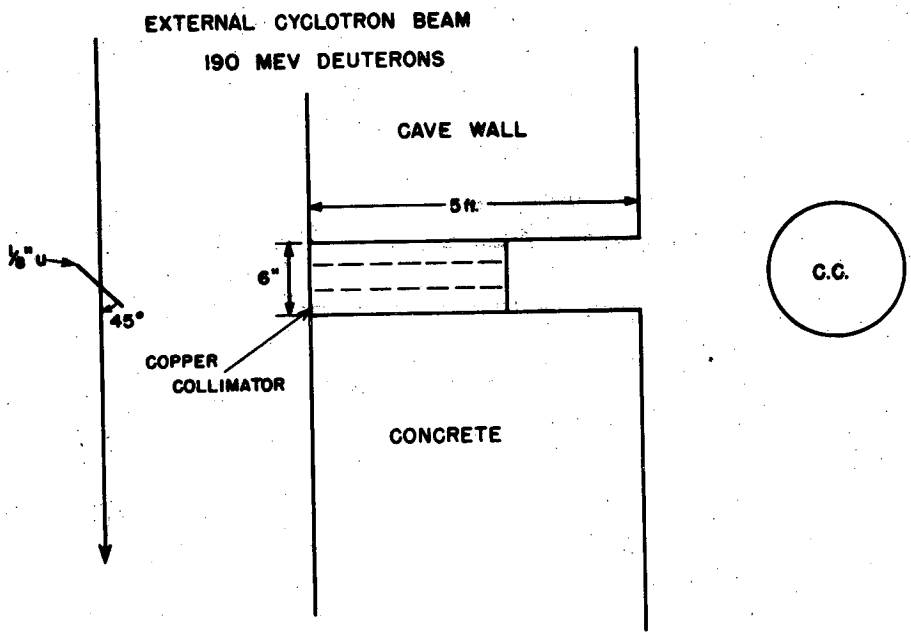

FIG. 2 SECTION 7

SECRET MU-5139

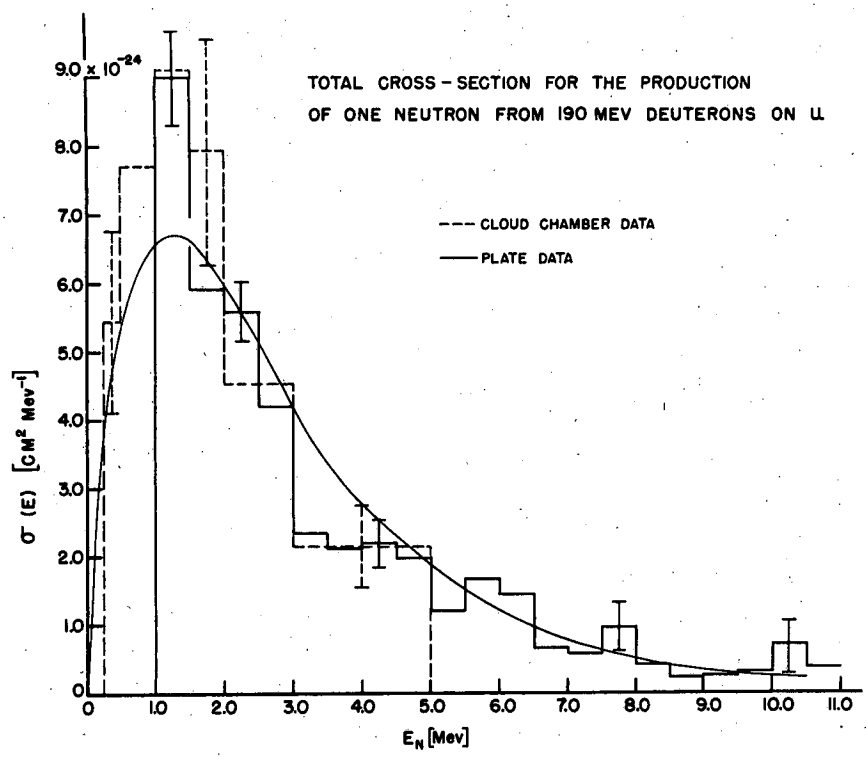

FIG. 3 SECTION 7

SECRET MU-5140

ATTENUATION OF NEUTRONS FROM Ra-Be SOURCE BY PARAFFIN IN FRONT OF BF_3 COUNTER

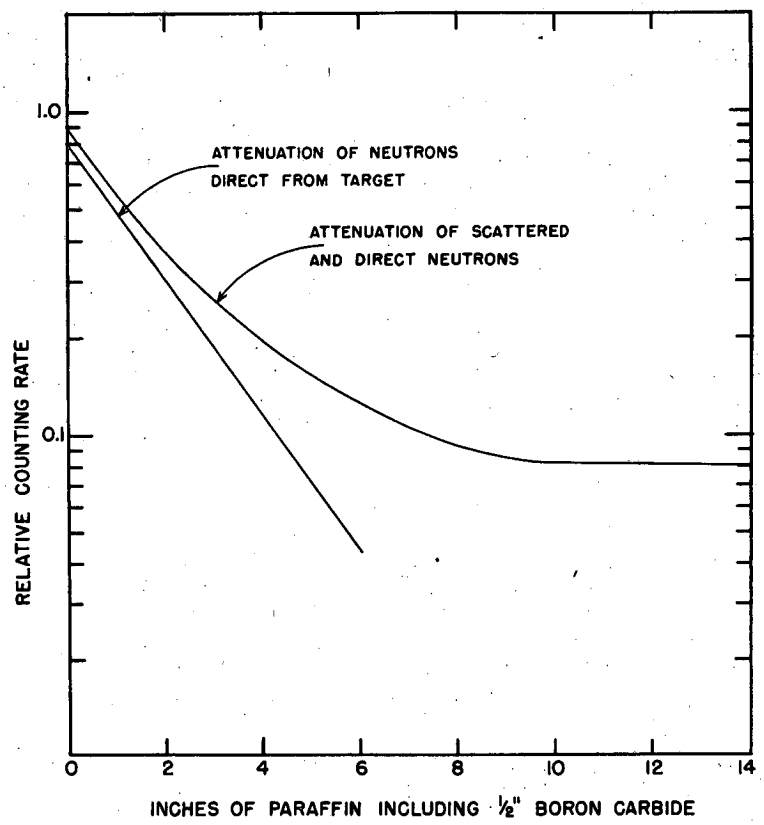

FIG. 4 SECTION 7

SECRET MU-5141

ANGULAR DISTRIBUTION OF NEUTRONS FROM 10"x 12"x 12"
BLOCK OF URANIUM BOMBARDED BY 190 MEV DEUTERONS

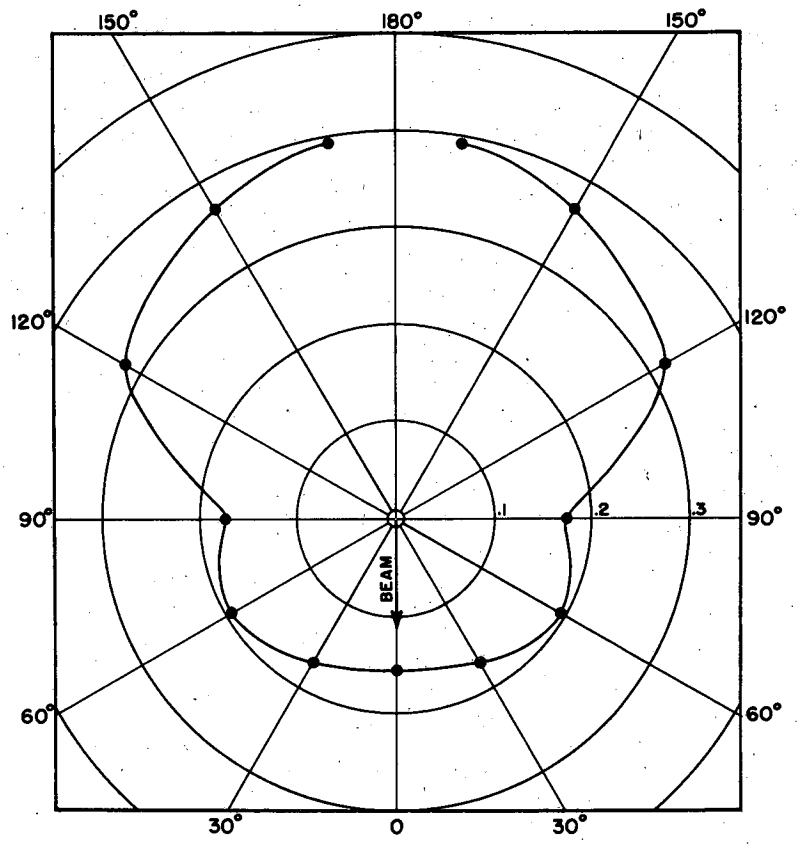

FIG. 5 SECTION 7

MU-5142

SECRET

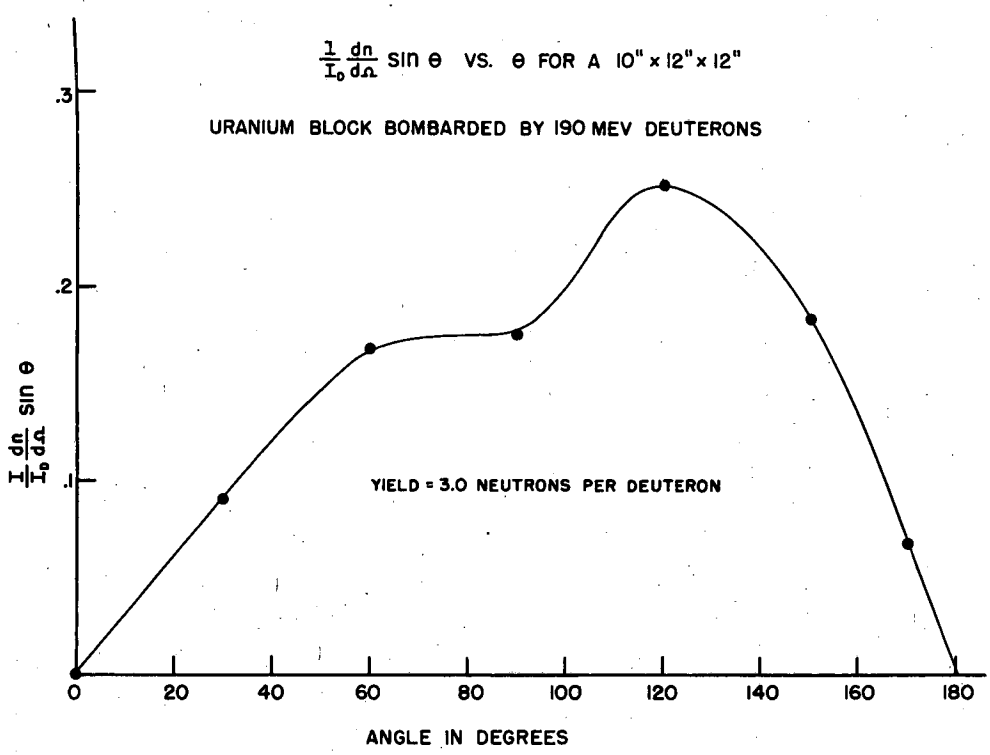

FIG. 6 SECTION 7

SECRET MU-5143

8. HIGH FREQUENCY PROGRAM

W. R. Baker

Several developments have occurred recently in connection with the MTA high frequency program that can now be reported. These represent data taken over a period of approximately two weeks on equipment that had been going through the shops at a rather slow rate over the previous two report periods. This equipment was the improved version of the new "A-12 type oscillator" -- perhaps better described now as "A-12 type amplifier". Most of the features of this new high frequency generating system have already been described in various past reports in this series, but these latest high level operations of it have been so successful that a more detailed description seems advisable.

Using one of the latest RCA - A2332 type super power tubes in this circuit over 1100 kilowatts of 12.25 megacycle C.W. power was delivered to a high Q resonant load at 80 percent efficiency. This limit was set by a maximum available power supply voltage of 20.5 kv. Operation was very satisfactory and no sign of thermal grid emission or any of the various other grid troubles that have plagued us in the past appeared. Apparently, the platinum-clad grid just introduced in these tubes is responsible for clearing up the grid emission problem. It remains to be seen, however, if this latest grid treatment is stable over a period of time. The platinum is only approximately 0.0001 inch thick and may have to be increased considerably to stand up over long periods. At the time of writing, word has just been received that an "LL" verision of the A2332 series has been produced with the platinum-clad grid and successfully operated at high power without showing signs of grid emission.

Figure 1 shows an outline of the overall mechanical layout of the new amplifier. It is composed of a compact tube house that is really only an extension of the transmission line, an air dielectric line of approximately 66 ohms impedance coupling it to a vacuum dielectric line of the same impedance that in turn terminates in a novel folded loop also of 66 ohms impedance. The latter couples to the magnetic flux of the resonant load and can be easily varied in coupling by rotation. It was originally intended that the junction between the air and vacuum line sections occur at a voltage minimum so that electrical stress on the disc insulator there would be low, but it proved practical to let the line carry the reactive current component of the tube anode capacitance, and this shifted the node some ten feet closer to the tube end. The insulator apparently operates without trouble at 25 kv -- which is not really surprising as a much smaller one on test was run at 40 kv without trouble. The great difficulty in arriving at a successful disc insulator has been in achieving a mechanical system that could be assembled easily without chipping the edges and having good vacuum tight seals. These features had to be commensurate with the electrical requirements. The details of this insulator scheme appear in Fig. 2. It appears to be completely satisfactory in all respects. Attention is directed in particular to the outer gasket where uneven clamping pressure cannot result in insulator breakage for which some earlier designs were noted.

Figures 3 and 4 show the rotary vacuum seal at the test cavity and the loop details. This loop was the culmination of several months of design and testing of various schemes aimed at producing one that had the same characteristic impedance as the transmission line and at the same time was an efficient flux interceptor. We looked for a loop that would gather the flux represented by the eight inch line diameter used and still be no larger than eight inches. Such a loop could be inserted or retracted through a port no larger than that required for the line. In some earlier designs the loop was over twice the line diameter. This present loop apparently intercepts approximately 80 percent of the available flux. One can arrive at an even more efficient loop by loading a simple high impedance two wire rectangular loop with the proper value of dielectric to adjust its characteristic impedance downward to that of the coaxial line, but solid dielectrics in a vacuum under high frequency stresses would probably not be very popular. The present loop uses metal fins to simulate higher dielectric material and is made reasonably compact in length by folding. The central "tongue" effects this folding. The loop is not good for frequencies where the dimensions of its components are greater than a small fraction of a wavelength, but for the 12 megacycle case for which it was designed it functions very well.

Figure 5 shows some of the details of the amplifier house. A conical transition section couples the coaxial transmission line to the 30 inch rectangular house with the inner conductor firmly mounted to the house with a simple tubular polystyrene insulator. This insulator also supports anode blocking condenser plug-in sockets and an upper 90° transmission line elbow not shown. It is the only line insulator used in the entire system other than the disc type vacuum barrier previously described. Connection to the tube is made by means of a tubular member that brings the line at the same impedance down as close to the ground plane as the anode insulation requirement will permit. This then leaves a fairly short section of higher impedance line terminated by the anode capacity of approximately 230 micro microfarad. The overall line length from tube anode to and including the folded loop was very accurately adjusted to a half wave on the fundamental such that, without back EMF from the load (load shorted for instance), almost no voltage could be built up at the tube anode even with the tube running at a fully modulated high current level. The shorted half wave line, in effect, reflects the short to the tube anode. The upper curve in Fig. 6 shows this condition and the lower curve shows that essentially the same thing applies to both odd and even harmonics. The middle curve shows what happens when the resonant load is then coupled to this system. The tube currents can only develop voltages at the line terminals on the fundamental and hence no appreciable energy can go into harmonics. The system is thus radically different from the usual approach to the problem which is to use a high capacitance "tank" circuit at the tube to minimize loss of power in harmonics. The new system is superior because no such "tank" is needed and the amplifier (or oscillator as the case may be) is simpler and cheaper to build and will not be troubled by the tank circuit component failures common in the older Mark 1 high frequency system. The new scheme in effect reflects a near infinite capacity at the tube elements where it should be but since very little locally stored energy exists, there is much less damage to tube elements in case of flash arcs. In conjunction with the

"crowbar" type of fault protection, it seems to push the amount of rf power that can be practically generated at one station to a much higher level. Higher efficiencies are in order with it also. For example, this system was checked at 92 percent efficiency at approximately 150 KW output with 12 kv anode voltage. The same or higher efficiency should be possible at higher levels if the tube itself could pass the higher current pulses associated with the required narrow angle of grid drive. Some idea of the relative merits of the new system over the old is gained by the knowledge that only two weeks of work by a small crew were required to surpass all the best features of the old one that had been gained in two years of intensive effort by a much larger group.

Figure 7 shows the electrical scheme used in these tests. It includes the feature referred to many time in the past as an "electronic" means of pre-exciting. This dispenses with the older rotating loop scheme. The rotating loop shown here merely exists for small load coupling changes and plays no part in the pre-exciting cycle. The sequence is as follows: Plate voltage is applied to the A2332 power amplifier by a trigger signal to the electronically controlled rectifier. As the plate voltage rises and plate current begins to build up a certain point is reached where a second signal indicated as occurring at "T=0" on the diagram switches the grid suddenly from a plate current cut-off value to full conduction. This permits a continuously operating high gain limiter amplifier to complete the feedback loop from the load to the A2332 grid. Oscillations rapidly build up to saturate the power tube drive circuit, which in turn completely modulates the plate current of the tube. These high current pulses occur at the correct frequency and phase to deliver a maximum power to the load. If the rate of rf voltage rise to the load is of the order of one kilovolt per microsecond the build up of ionization in the load will not be rapid enough to prevent excitation. The older rotating loop at most did only about twice this value whereas the new system was measured at 7 kv per microsecond.

Once the system has been "started" it can continue to run C.W. or be pulsed off and on at will. A separate sub-exciter as used by the older scheme is unnecessary, as is likewise unnecessary a program bias supply and all of the complex interlock protection required by these. A simple overcurrent signal from anode to the crowbar is all that is apparently required to protect the equipment. During the first few microseconds of the starting cycle this overcurrent system must be somewhat desensitized to permit a higher current spike to pass, but it is felt that the time is too short to damage the tube.

Adjustment of the phase of the driver amplifier system was done manually by means of a trombone section of 100 ohm line and monitored visually on an oscilloscope. Plans for an automatic adjuster did not go very fast since it proved fairly practical to operate with the manual scheme.

Present plans call for a shift of emphasis to higher frequency. Because of recent developments in focusing of the accelerator beam, it now seems economically desirable to reduce the accelerator diameter considerably. With this in mind, an attempt is now being made to find the upper frequency limit

of the present A2332 power tube design. Recent improvements in the latter seem to point to around 50 megacycles, so our next experiments will center in that range. Present tubes may be in trouble with glass and seal heating problems, but this is apparently already close to solution at R. C. A. with a new type of ceramic envelope and all copper seal. Higher than 50 megacycle operation will probably not be feasible without a tube size and power reduction because of I^2R grid losses.

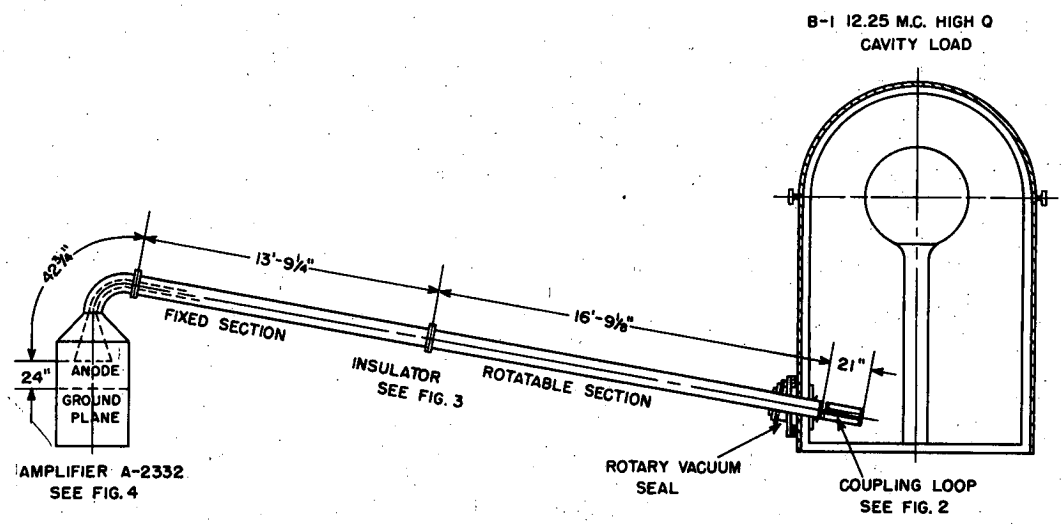

FIG. 1 SECTION 8

MU-5144

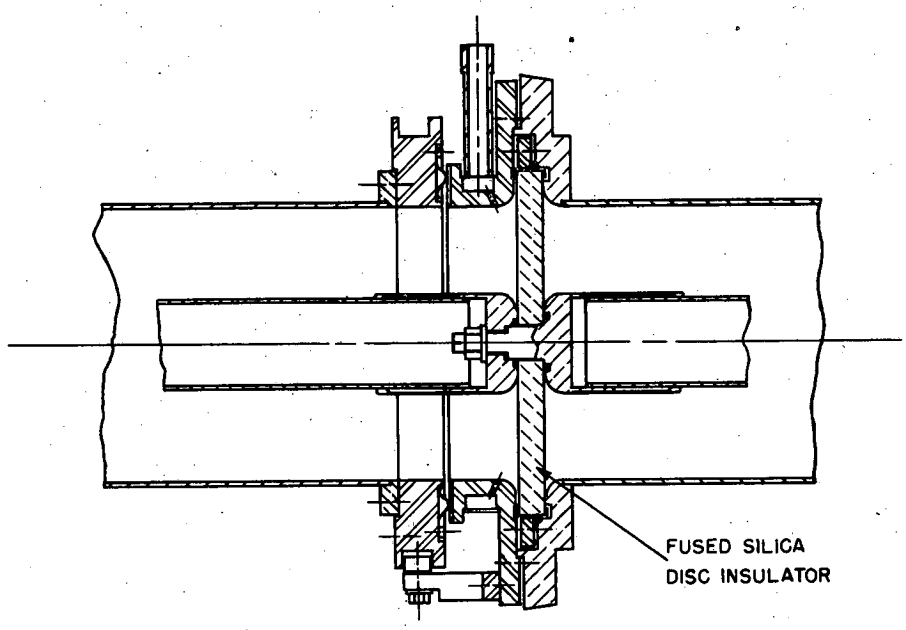

TRANSMISSION LINE INSULATOR

FIG. 2 SECTION 8

MU-5145

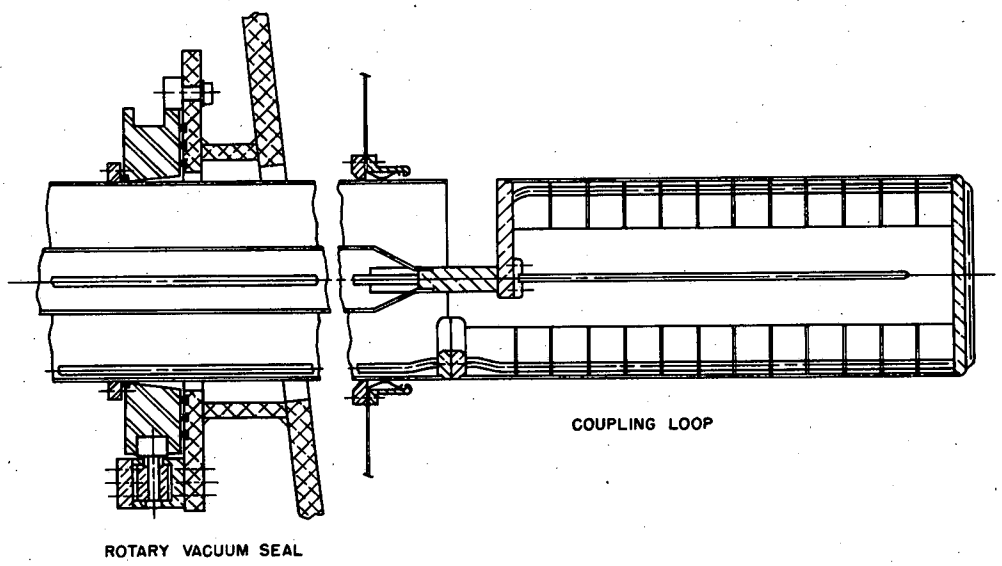

FIG. 3 SECTION 8

MU-5146

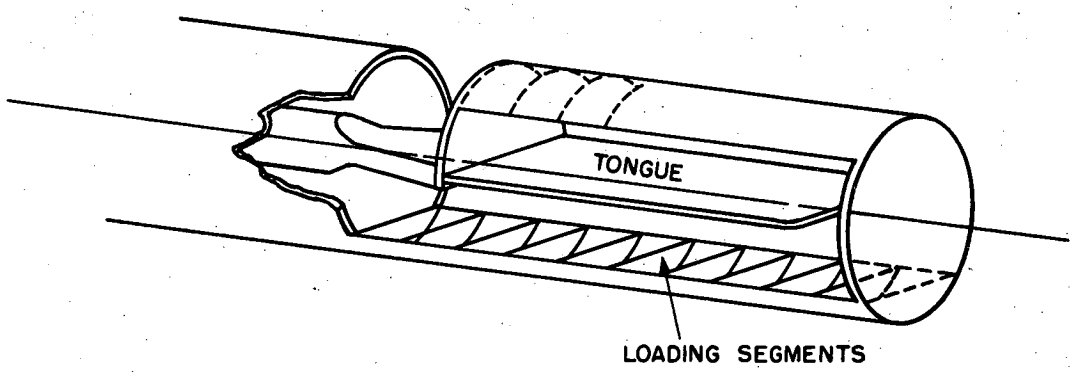

COUPLING LOOP

FIG. 4 SECTION 8

MU-5147

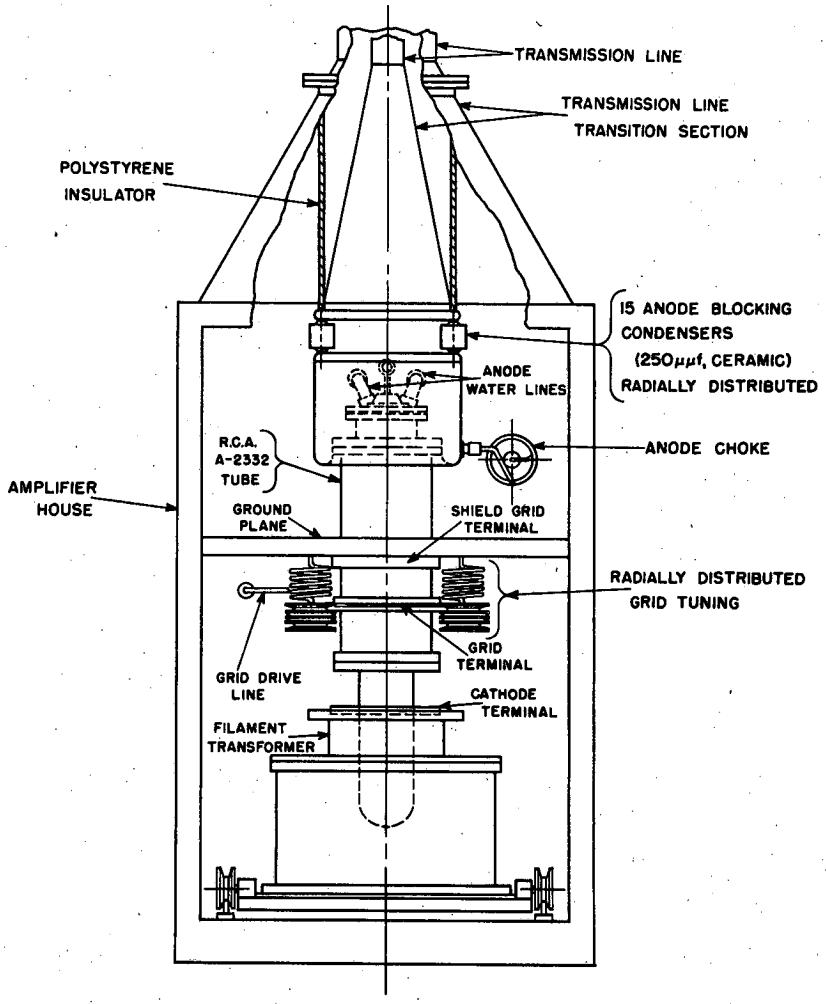

FIG. 5 SECTION B

MU-5148

TRANSMISSION LINE VOLTAGES

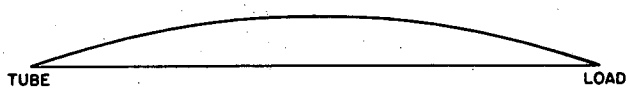

FUNDAMENTAL VOLTAGE DISTRIBUTION AT BEGINNING OF "PRE – EXCITATION" CYCLE

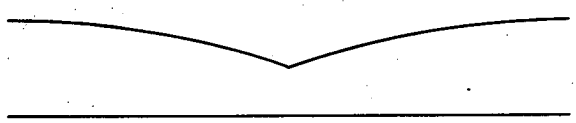

FUNDAMENTAL VOLTAGE DISTRIBUTRION DURING NORMAL DELIVERY OF POWER TO LOAD

TYPICAL HARMONIC VOLTAGE DISTRIBUTIONS

FIG. 6 SECTION 8

MU-5149

"PRE-EXCITATION" IS ACCOMPLISHED BY PULSING THE 6166 DRIVER BIAS FROM THE CUTOFF VALUE TO ZERO AT 7.5 KV PLATE VOLTAGE ON THE A-2332. (FIRING TIME LABELED T=0)

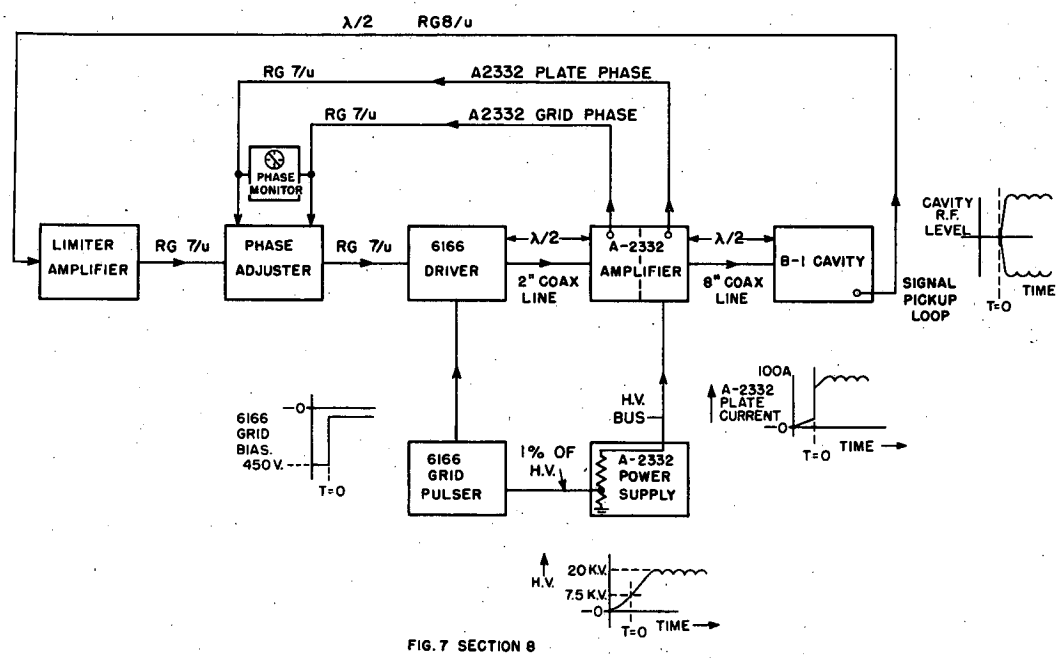

FIG. 7 SECTION 8

MU-5150

9. DYNAMICAL PROPERTIES OF MARK I

J. F. Waddell

The rf regulator equipment has been installed at Livermore and adjustments made with the entire accelerator in CW operation. Difficulties were encountered in enabling power supply No. 1 under pulse conditions. It is felt that the trouble in question probably was due to maladjustment of certain of the networks in power supply No. 1. The difficulty could not be reproduced under dummy load operation of power supply No. 1 following a series of adjustments made by CRD engineers. If this trouble recurs, it will have to be tracked down to its source, a task which would require a day or two of accelerator time if the cause were to prove evasive. Aside from this, there remains only adjustment of rf input level to be performed.

Transient response of the Mark I System under the closed loop conditions was adjusted to have the shortest attainable rise-time consistent with reliable operation of the ignitron firing networks in power supply No. 1. Rise-time is limited by misfiring of the ignitrons, which occurs when a sufficiently rapid signal is applied to the firing networks, and illustrates a basic limitation on peaking-transformer type firing networks, as well as on most electronic type firing networks. H. D. Morris, of this group, has developed a type of electronic firing-signal generator which does not have the shortcomings mentioned above. This design is available whenever it may be decided that faster response-time must be achieved in Mark I than the now available rise-time minimum of 5×10^{-3} seconds. Experiments on the test cavity model have indicated the attainability of 2×10^{-3} seconds, and perhaps slightly less.

Work is progressing apace on the compilation of research reports. The final report of this work will consist of a series of four reports, or papers, on the various aspects of the work and their inter-relationship. The first three of these papers will be unclassified, and will be published as UCRL reports for general circulation. Work at present is being conducted on the first of these, a paper dealing with Time Quantization in Feedback Systems, which will be published in the literature. An abstract of this paper is included below. The other two papers in this category will be (1) dynamical properties of a system of one or more electronic oscillators having a common resonant load (2) a summary and interpretation of feedback theory, with special attention to phase correction techniques. The classified report will deal with application of the foregoing to the dynamical stabilization of particle accelerators, in particular to the Mark I machine.

Those participating in this work include, in addition to the writer, H. D. Morris, W. H. Nelson and M. H. Mendenhall.

Time Quantization in a Feedback System

J. F. Waddell and H. D. Morris

Effects observed in an otherwise linear feedback system wherein time is quantized are discussed. The physical process of time quantization in a feedback system is analyzed and complications resulting therefrom are pointed

out. Spectral composition of the output of a clamped type of time-quantizer is discussed, in a manner applicable to time-quantizers having any output pulse shape. On the basis of the spectral analysis, a transfer function is developed which is applicable to signals of all frequencies. Linear passive approximations to the transfer function are developed, including one which is physically realizable, which are applicable to signals having periods longer than two quanta of time.

The results of the analysis are applied in a new criterion for stability of a time-quantized feedback system.

Experimental verification of the theoretical results is demonstrated.

10. M. T. A. MECHANICAL DESIGN

W. M. Brobeck

Engineering

During this period approximately 6 members of the Mechanical Engineering and Drafting section were employed on the MTA project compared to 20 in the last quarter. Their effort was directed primarily toward engineering follow-up during fabrication of the following Mark I equipment for reducing the sparking damage in the 0-1 drift tube gap:

(1) Inconel facings for the existing drift-tube surfaces at each end of the 0-1 gap. (The end face of the liner is called the zero drift tube.) Tests made by CRD with these inconel facings installed in the Mark I machine indicated that inconel is a satisfactory refractory facing.

(2) A new No. 1 drift tube with a protrudent nose and inconel shell. This drift tube was fabricated at UCRL and delivered to Livermore, but had not been installed at the end of this period.

(3) A recontoured No. 0 drift tube with an inconel nose protruding from a concave inconel center section. This drift tube was fabricated at UCRL and delivered to Livermore. At the end of November, CRD tests on the 1/10 scale rf model indicated that the voltage gradient on the recontoured drift tube would be too high. Consequently a new drift tube No. 0 with the original contour and an inconel shell extending to 66 inches diameter will be designed and procured by CRD, with UCRL providing engineering consultation and assistance in fabrication.

Test electrodes and their attachements have been designed for the experimental group conducting sparking tests for Mark I on the XC magnet.

Construction of the 0.03 scale rf model of the low energy end of the Mark II accelerator will not be completed. This job has been cancelled except for completion of the parts (approx. 85 percent of the total) on which fabrication had already started. The completed parts will be sent to Livermore for possible future use.

Fabrication of Drift Tubes (W. M. Pierson)

Replacement drift tubes No. 0 (OB) and No. 1 (1B) for Mark I were completed in November, 1952.

DECLASSIFIED

Number OB was requested about the end of October and was delivered the middle of November. It was made of four sheets of Inconel, welded to form a flat cone about a spun Inconel bore tube. Copper tubing was furnace brazed onto the sheet and Inconel tubing onto the bore tube. This assembly fitted into the outer section of the original No. 0.

Number 1B, with a new magnet and 4 Inconel spinnings gave considerable trouble. Difficulty was experienced holding the Inconel tubing in place during furnace brazing, and with stress corrosion cracks in the Inconel sheets. This drift tube was finally completed the end of November.

DECLASSIFIED

SECRET
SECURITY INFORMATION

11. ELECTRON MODEL CYCLOTRON STUDIES

Robert V. Pyle

Construction and magnetic field measurements of Electron Model III were completed late in September. The design had called for a magnetic field shimmed to within 0.1 percent of the theoretical value, but the cyclotron was put into operation with errors approaching 1 percent at the smallest and largest radii, the field being too high inside of 7 inches and too low beyond 17 inches. Errors at intermediate radii are about 0.2 percent. As in the previous model, the field can be adjusted to some extent by means of trimming coils mounted above and below the gap on the contoured pole surfaces.

The accelerating electrodes are three 60° wide sectors located in the valleys and driven 120° out of phase. They give an energy gain per revolution of three times the peak "triant" voltage. A full energy beam was obtained at 100 volts peak a few minutes after the cyclotron was turned on. The lowest voltage at which full energy beam has been obtained is 23 volts peak, corresponding to a minimum of more than 1000 turns. This "threshold" is set by the geometry of the source structure rather than by the magnetic field, and the true threshold of this cyclotron has not been measured.

When the beam is collimated axially at a radius of 5 inches to a height of 1/8 inch, a spot is observed on a fluorescent probe which has maximum radial and axial dimensions of 1/8 inch out of a radius of 16-1/2 inches on the hills. At larger radii the axial and radial amplitudes are critically dependent on the shape of the magnetic field. With the field as shimmed, the axial extent increases slowly to a value at 19 inches about 2-1/2 times that at 16 inches. Radial blowup starts at 17-1/2 inches and the radial amplitude grows to a maximum of about one inch. This is attributed to the predicted radial blowup occurring when the frequency of radial oscillation becomes 3/2 the cyclotron frequency. As the field was designed, this effect should occur at $v/c = 0.5$ or 18-1/4 inch radius on the hills.

When the field at large radii is strengthened on the hills and weakened in the valleys, the axial focusing is improved and the radial blowup occurs at a smaller radius. The reverse is true when the hills are weakened and the valleys strengthened. By adjusting the field in this way, it has been possible to postpone the radial blowup to a radius of 19-1/4 inches, the maximum radius to which the field has been shimmed. Electrons at this radius have $v/c = 0.512$, equivalent to deuterons with 305 Mev energy. Under these conditions the maximum axial height is nearly four times that at 16 inches.

SECRET
SECURITY INFORMATION

SECRET
SECURITY INFORMATION

DECLASSIFIED

SECRET
SECURITY INFORMATION