UNIVERSITY OF CALIFORNIA
Radiation Laboratory
Berkeley, California

Course in the Theory and Design
of Particle Accelerators

LECTURE VIII
January 21, 28 and February 4, 1953

W. M. Brobeck
(Notes By: R. Marker and L. Lucas)

- - - - - - -

SCOPE:

This lecture covers the phase oscillation and the associated energy oscillation about the synchronous energy for phase stable acceleration in first the frequency modulated cyclotron (or synchrocyclotron) synchrotron and bevatron, and next, the constant frequency cyclotron.

FREQUENCY MODULATED CYCLOTRON:

Synchronous Energy

The synchronous energy, E_s, is defined as the energy of a particle not oscillating in phase. The angular velocity, ω, of this non-oscillating particle is the same as the oscillator angular velocity, ω_o. From Lecture VI, Equation (5)

$$(1) \quad \omega_o = \frac{v}{R} = \frac{Bec}{E_s}$$

or

$$(2) \quad E_s = \frac{Bec}{\omega_o}$$

where B is the magnetic field strength and is constant within a few percent; e is the number of electronic charges; c is the velocity of light; and ω_o is the oscillator angular velocity ($\omega_o = 2\pi$ x oscillator frequency in cycles per second). E_s, then, varies inversely with the oscillator angular velocity.

In the synchro-cyclotron, the angular velocity of the oscillator is decreased with time (hence the term "Frequency-modulated") so that the value of synchronous energy must increase. Each time the particle crosses the dee gap it receives an amount of energy equal to the product of the number of electronic charges, e, and the voltage across the gap, $V_o \sin \phi$, where V_o is the maximum gap voltage which varies sinusoidally. The increase of synchronous energy per turn, assuming two gaps per turn, is then

$$(3) \quad \frac{dEs}{dn} = 2eV_o \sin \phi_s$$

ϕ_s is the synchronous phase angle and is measured from a point 90° behind the maximum voltage vector. ϕ_s has a constant value (from the definition of E_s).

DISCLAIMER

This document was prepared as an account of work sponsored by the United States Government. While this document is believed to contain correct information, neither the United States Government nor any agency thereof, nor the Regents of the University of California, nor any of their employees, makes any warranty, express or implied, or assumes any legal responsibility for the accuracy, completeness, or usefulness of any information, apparatus, product, or process disclosed, or represents that its use would not infringe privately owned rights. Reference herein to any specific commercial product, process, or service by its trade name, trademark, manufacturer, or otherwise, does not necessarily constitute or imply its endorsement, recommendation, or favoring by the United States Government or any agency thereof, or the Regents of the University of California. The views and opinions of authors expressed herein do not necessarily state or reflect those of the United States Government or any agency thereof or the Regents of the University of California.

Now the log of Equation (2) is

$$(4) \quad \text{Log}\,(E_s) = \log \frac{Bec}{\omega_o} = \log Bec - \log \omega_o$$

or

$$(4a) \quad \frac{dE_s}{E_s} = 0 - \frac{d\omega_o}{\omega_o} \qquad \text{first derivative of (4)}$$

or

$$(4b) \quad dE_s = - \frac{E_s}{\omega_o}\, d\omega_o$$

but

$$(4c) \quad dn = \frac{\omega_o}{2\pi}\, dt$$

so

$$(5) \quad \frac{dE_s}{dn} = - \frac{2\pi E_s}{\omega_o \times \omega_o} \frac{d\omega_o}{dt} \qquad \text{dividing (4b) by (4c)}$$

So the change in synchronous energy per turn is determined by the rate of change of angular velocity ($d\omega_o/dt$) as determined by the characteristics of the rotating or vibrating condenser of the cyclotron.

If Equation (3) is solved for $\sin \phi_s$,

$$(6) \quad \sin \phi_s = \frac{\frac{dE_s}{dn}}{2eV_o}$$

$$= \frac{\text{Energy gain per turn required to stay at constant phase angle}}{\text{Maximum available energy gain per turn}}$$

Most cyclotron are designed so $\sin \phi_s = 1/2$; or $\phi_s = 30°$.

Energy Oscillations

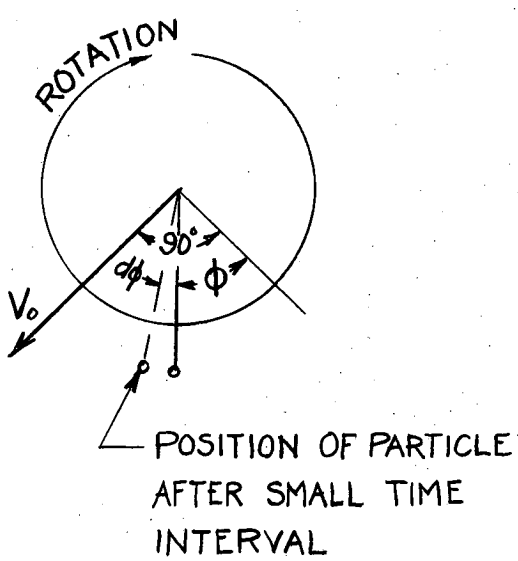

FIG. 1

Consider now a particle not travelling at the angular velocity, ω_o, of the voltage vector, V_o. If the angular velocity of this particle oscillating in phase is called ω, then from Figure 1,

$$(7) \quad d\phi = \omega\, dt - \omega_o\, dt$$

and

$$(7a) \quad dn = \frac{\omega dt}{2\pi}$$

so

$$(8) \quad \frac{d\phi}{dn} = 2\pi \left(\frac{\omega - \omega_o}{\omega}\right)$$

This may be related to energy by substituting (1) in (8)

$$(8a)\quad \frac{d\phi}{dn} = 2\pi\left(\frac{\frac{Bec}{E} - \frac{Bec}{E_s}}{\frac{Bec}{E}}\right)$$

$$= 2\pi\,\frac{\frac{1}{E} - \frac{1}{E_s}}{\frac{1}{E}}$$

$$= 2\pi\,E\left(\frac{E_s - E}{E_s E}\right)$$

so

$$(9)\quad \frac{d\phi}{dn} = 2\pi\left(\frac{E_s - E}{E_s}\right)$$

The equation relating ϕ and n, in terms of dee voltage, V_o, and oscillator frequency, f, called the phase equation is developed as follows: (derivation not included in lecture)

First multiply Equation (9) by E_s^2 and take first derivative,

$$(10)\quad \frac{d(E_s^2\,\frac{d\phi}{dn})}{dn} = \frac{d\,(2\pi E_s^2 - 2\pi E\,E_s)}{dn}$$

If both E_s and E are variables,

$$(10a)\quad \frac{d(E_s^2\,\frac{d\phi}{dn})}{dn} = 2\pi(2E_s\,\frac{dE_s}{dn} - E\,\frac{dE_s}{dn} - E_s\,\frac{dE}{dn})$$

$$(10b)\quad = 2\pi\left[(2E_s - E)\,\frac{dE_s}{dn} - E_s\,\frac{dE}{dn}\right]$$

but

$$(11)\quad (2E_s - E) = E_s + (E_s - E)$$

From Equation (9)

$$(12)\quad \frac{d\phi}{dn} = 2\pi(\frac{E_s - E}{E_s})$$

or

$$(12a)\quad (E_s - E) = \frac{E_s}{2\pi}\,\frac{d\phi}{dn}$$

Substituting (12a) in (11),

$$(13)\quad (2E_s - E) = E_s + \frac{E_s}{2\pi}\,\frac{d\phi}{dn}$$

$$(13a)\quad = E_s\,(1 + \frac{1}{2\pi}\,\frac{d\phi}{dn})$$

Substituting (13a) in (10b),

$$(14)\quad \frac{d(E_s^2\,\frac{d\phi}{dn})}{dn} = 2\pi\left[E_s\,\frac{dE_s}{dn}\,(1 + \frac{1}{2\pi}\,\frac{d\phi}{dn}) - E_s\,\frac{dE}{dn}\right]$$

This may be simplified as follows:

$$(15)\quad \frac{d}{dn} = \frac{dt}{dn} \cdot \frac{d}{dt}$$

now

$$(16)\quad \omega = 2\pi \frac{dn}{dt}$$

or

$$(16a)\quad \frac{dt}{dn} = \frac{2\pi}{\omega}$$

so Equation (15) becomes

$$(17)\quad \frac{d}{dn} = \frac{2\pi}{\omega} \cdot \frac{d}{dt}$$

or

$$(17a)\quad \frac{d\phi}{dn} = \frac{2\pi}{\omega} \cdot \frac{d\phi}{dt}$$

but from Equation (8)

$$\frac{d\phi}{dn} = 2\pi\left(\frac{\omega - \omega_o}{\omega}\right)$$

Equating (17a) and (8)

$$(18)\quad \frac{2\pi}{\omega} \cdot \frac{d\phi}{dt} = 2\pi\left(\frac{\omega - \omega_o}{\omega}\right)$$

$$(18a)\quad \frac{1}{\omega} \cdot \frac{d\phi}{dt} = 1 - \frac{\omega_o}{\omega}$$

$$(18b)\quad \frac{\omega_o}{\omega} = 1 - \frac{1}{\omega}\frac{d\phi}{dt}$$

$$(18c)\quad \frac{1}{\omega} = \frac{1}{\omega_o}\left(1 - \frac{1}{\omega}\frac{d\phi}{dt}\right)$$

From (17a)

$$\frac{1}{\omega} \cdot \frac{d\phi}{dt} = \frac{1}{2\pi}\frac{d\phi}{dn}$$

and

$$(18d)\quad \frac{1}{\omega} = \frac{1}{\omega_o}\left(1 - \frac{1}{2\pi}\frac{d\phi}{dn}\right)$$

Now from (17)

$$\frac{d}{dn} = 2\pi \times \frac{1}{\omega} \times \frac{d}{dt}$$

Substituting (18d) in (17)

$$(19)\quad \frac{d}{dn} = 2\pi \times \frac{1}{\omega_o}\left(1 - \frac{1}{2\pi}\frac{d\phi}{dn}\right)\frac{d}{dt}$$

or

$$(20)\quad \frac{dE_s}{dn} = 2\pi \times \frac{1}{\omega_o}\left(1 - \frac{1}{2\pi}\frac{d\phi}{dn}\right)\frac{dE_s}{dt}$$

Equation (14) now becomes:

$$(21)\quad \frac{d(E_s^2 \frac{d\phi}{dn})}{dn} = 2\pi \left[E_s \times 2\pi \times \frac{1}{\omega_o} (1 - \frac{1}{2\pi}\frac{d\phi}{dn})(1 + \frac{1}{2\pi}\frac{d\phi}{dn}) \times \frac{dE_s}{dt} - E_s \frac{dE}{dn} \right]$$

now

$$(1 - \frac{1}{2\pi}\frac{d\phi}{dn})(1 + \frac{1}{2\pi}\frac{d\phi}{dn}) = 1 - \frac{1}{4\pi^2}(\frac{d\phi}{dn})^2$$

and since $\frac{d\phi}{dn}$ is small, $(\frac{d\phi}{dn})^2$ may be neglected, so Equation (21) becomes:

$$(22)\quad \frac{d(E_s^2 \frac{d\phi}{dn})}{dn} = 2\pi \left[\frac{2\pi}{\omega_o} E_s \frac{dE_s}{dt} - E_s \frac{dE}{dn} \right]$$

but $\frac{1}{\omega_o} = \frac{1}{2\pi f}$ when f is the frequency of the oscillator, so

$$(23)\quad \frac{d(E_s^2 \frac{d\phi}{dn})}{dn} = \frac{2\pi}{f} E_s \frac{dE_s}{dt} - 2\pi E_s \frac{dE}{dn}$$

Now the change in energy per turn, dE/dn equals $2eV_o \sin\phi$, so

$$(24)\quad \frac{d(E_s^2 \frac{d\phi}{dn})}{dn} = \frac{2\pi}{f} E_s \frac{dE_s}{dt} - 4\pi E_s e V_o \sin\phi$$

Equation (24), the phase equation, is similar in form to that of a pendulum with a constant torque for which the solution has already been worked out. The equation for the motion of the pendulum is:

$$(25)\quad \frac{d(I\frac{d\phi}{dt})}{dt} = T - G \sin\phi$$

where
- G = restoring moment due to force of gravity on pendulum.
- I = moment of inertia of pendulum.
- T = Torque caused by an inertialess weight.
- I, then is analagous to E_s^2.
- t, then is analagous to n.
- T, then is analagous to $(2\pi/f)E_s(dE_s/dt)$
- G, then is analagous to $4\pi E_s e V_o$
- ϕ_s is then the rest position of the pendulum.

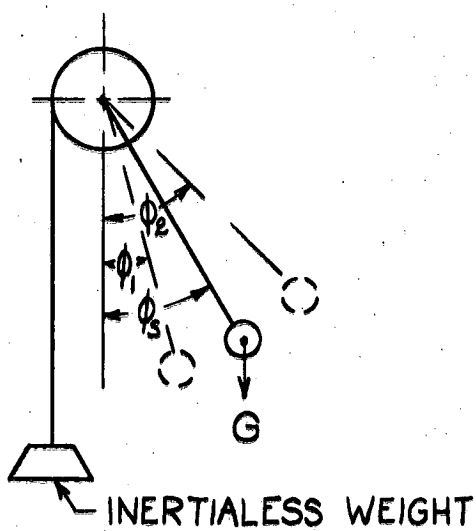

FIG. 2

For small amplitudes of oscillation, the pendulum frequency is:

$$(26)\quad f = \frac{1}{2\pi}\sqrt{\frac{G \cos\phi_s}{I}}$$

and by analogy, the particle oscillation frequency in cycles per turn is

$$(27)\quad f = \sqrt{\frac{eV_o \cos\phi_s}{\pi E_s}} \quad \text{cycles/turn}$$

$$= f_o\sqrt{\frac{eV_o \cos\phi_s}{\pi E_s}} \quad \text{cycles/sec}$$

The angular velocity of the pendulum is

$$(28)\quad \frac{d\phi}{dt} = 2\pi f(\phi - \phi_s)$$

by analogy, the rate of change of phase of the particle is

$$(29)\quad \frac{d\phi}{dn} = 2\pi\sqrt{\frac{eV_o \cos\phi_s}{\pi E_s}} \times (\phi - \phi_s)$$

also, since $\frac{d\phi}{dn} = 2\pi\left(\frac{E_s - E}{E_s}\right)$ [Equation (9)]

$$(30)\quad E_s - E = \sqrt{\frac{E_s eV_o \cos\phi_s}{\pi}} \times (\phi - \phi_s)$$

Equation (30) is true for small departures of ϕ from ϕ_s, say a 10° maximum.

Now, provided I and G change slowly, it can be shown by application of what is called the adiabatic theorem that the amplitude of the pendulum varies with $(IG)^{-1/4}$; so the phase amplitude of the particle varies with $E_s^{-3/4}$, $V^{-1/4}$ and $(\cos\phi_s)^{-1/4}$.

Phase Stability

Notice that in this torque-pendulum analogy, the restoring moment of gravity, G, the moment of inertia, I, and the torque, T, must increase with time if the analogy be maintained as E_s increases; but they must do so in such proportion as to maintain the same rest angle of the pendulum, ϕ_s. By design, this rest angle can be made any value from $\phi_s = o$ to $\phi_s = 90°$. At $\phi_s = o$ the analogy is that of a simple pendulum; and the pendulum may swing from -180° to +180° without becoming unstable and starting to revolve. At $\phi_s = 90°$, however, the pendulum is on the verge of instability and any oscillations are not tolerated. Thus it is apparent that the allowable phase oscillations are a function of the synchronous phase angle.

Now to study the condition for limiting the phase oscillation for stability, large energy oscillations must be considered. For this study, let the synchronous energy, E_s, be considered constant for a few cycles. Now Equation (24) is:

$$\frac{d\left(E_s^2 \frac{d\phi}{dn}\right)}{dn} = \frac{2\pi}{f} E_s \frac{dE_s}{dt} - 4\pi E_s eV_o \sin\phi$$

If E_s is a constant,

$$(31)\quad \frac{d\left(E_s^2 \frac{d\phi}{dn}\right)}{dn} = E_s^2 \frac{d\phi}{dn^2}$$

or

$$(32)\quad E_s^2 \frac{d^2\phi}{dn^2} = \frac{2\pi}{f} E_s \frac{dE_s}{dt} - 4\pi E_s eV_o \sin\phi$$

or multiplying through by $\frac{1}{4\pi E_s}$

$$(33)\quad \frac{E_s}{4\pi} \frac{d^2\phi}{dn^2} = \frac{1}{2f} \frac{dE_s}{dt} - eV_o \sin\phi$$

$$(33a)\quad = eV_o\left(\frac{1}{2eV_o f} \frac{dE_s}{dt} - \sin\phi\right)$$

But

$$(34)\quad \frac{dE_s}{dn} = \frac{dE_s}{dt} \times \frac{dt}{dn} = \frac{dE_s}{dt} \times \frac{1}{f}$$

and also from (3) $\quad \frac{dE_s}{dn} = 2eV_o \sin \phi_s$

Equating (3) and (34)

$$(35)\quad 2eV_o \sin \phi_s = \frac{dE_s}{dt} \times \frac{1}{f}$$

and

$$(36)\quad \sin \phi_s = \frac{1}{2eV_o f} \times \frac{dE_s}{dt}$$

Equation (33a) becomes:

$$(37)\quad \frac{E_s}{4\pi} \frac{d^2\phi}{dn^2} = eV_o (\sin \phi_s - \sin \phi)$$

now

$$\frac{d^2\phi}{dn^2} = \frac{d\phi}{dn} \cdot \frac{d}{d\phi} \left(\frac{d\phi}{dn}\right)$$

so

$$(37a)\quad \frac{E_s}{4\pi} \frac{d\phi}{dn} \cdot d \left(\frac{d\phi}{dn}\right) = eV_o \left[\sin \phi_s - \sin \phi\right] d\phi$$

Integrating both sides,

$$(37b)\quad \frac{E_s}{8\pi}\left(\frac{d\phi}{dn}\right)^2 = eV_o \left[\phi \sin \phi_s + \cos \phi + K\right]$$

but

$$(9)\quad \frac{d\phi}{dn} = 2\pi\left(\frac{E_s - E}{E_s}\right)$$

so

$$(37c)\quad \frac{E_s}{8\pi} \times 4\pi^2 \left(\frac{E_s - E}{E_s}\right)^2 = eV_o \left[\phi \sin \phi_s + \cos \phi + K\right]$$

or

$$(38)\quad \frac{\pi(E_s - E)^2}{E_s} = 2eV_o \left[\phi \sin \phi_s + \cos \phi + K\right]$$

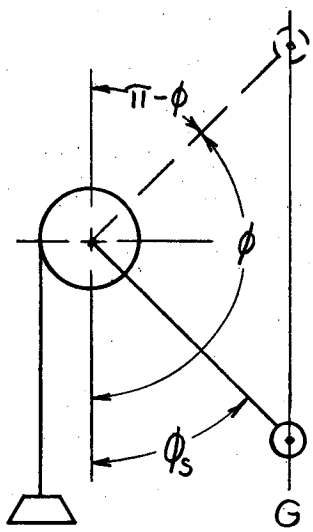

FIG. 3

The constant of integration, K, may be evaluated for oscillations of maximum stable amplitude by placing $d\phi/dn = 0$ at the critical angle for instability; and also, from Figure 3, the maximum stable ϕ is when the pendulum swings to a vertical position over the rest position. (Restoring moment of gravity becomes less than the applied torque, T, at positions above this, and pendulum revolves).

From the Figure 3,

$$(39) \quad \pi - \phi = \phi_s$$

or

$$(39a) \quad \phi = \pi - \phi_s$$

If $\frac{d\phi}{dn} = 0$, from Equation (9)

$$\frac{d\phi}{dn} = 0 = 2\pi \frac{(E_s - E)}{E_s}$$

or $(40) \quad E_s = E$

substituting (39a) and (40) in (38) gives:

$$(41) \quad \frac{\pi(E_s - E)^2}{E_s} = 2eV_o \left[(\pi - \phi_s) \sin \phi_s + \cos (\pi - \phi_s) + K\right]$$

$$(41a) \quad 0 = (\pi - \phi_s) \sin \phi_s + \cos (\pi - \phi_s) + K$$

$$(41b) \quad K = - (\pi - \phi_s) \sin \phi_s + \cos \phi_s$$

With this value of K for the limiting stability condition, Equation (3) becomes:

$$(42) \quad \frac{\pi(E_s - E)^2}{E_s} = 2eV_o \left[\phi \sin \phi_s + \cos \phi - (\pi - \phi_s) \sin \phi_s + \cos \phi_s\right]$$

$$(42a) \quad \frac{(E_s - E)^2}{\frac{2E_s\, eV_o}{\pi}} = \left[\phi \sin \phi_s + \cos \phi + \cos \phi_s - (\pi - \phi_s) \sin \phi_s\right]$$

or

$$(43) \quad \frac{E_s - E}{\sqrt{\frac{2E_s\, eV_o}{\pi}}} = \sqrt{\phi \sin \phi_s + \cos \phi + \cos \phi_s - (\pi - \phi_s) \sin \phi_s}$$

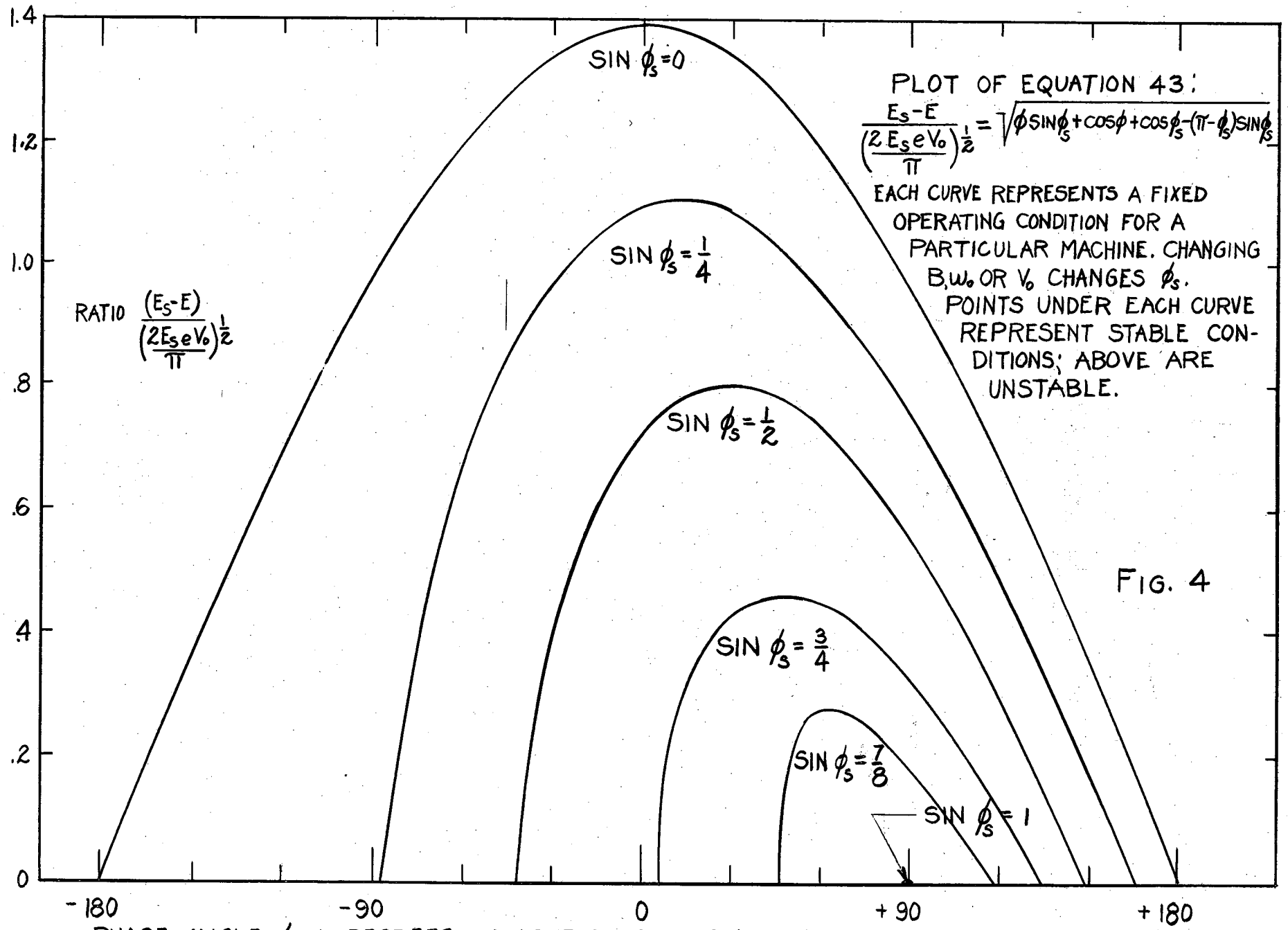
PLOT OF EQUATION 43:
$\frac{E_s - E}{\left(\frac{2E_s e V_0}{\pi}\right)^{\frac{1}{2}}} = \sqrt{\phi \sin\phi_s + \cos\phi + \cos\phi_s - (\pi - \phi_s)\sin\phi_s}$
EACH CURVE REPRESENTS A FIXED OPERATING CONDITION FOR A PARTICULAR MACHINE. CHANGING B, ω_0 OR V_0 CHANGES ϕ_s.
POINTS UNDER EACH CURVE REPRESENT STABLE CONDITIONS; ABOVE ARE UNSTABLE.
RATIO $\frac{(E_s - E)}{\left(\frac{2E_s e V_0}{\pi}\right)^{\frac{1}{2}}}$
SIN $\phi_s = 0$
SIN $\phi_s = \frac{1}{4}$
SIN $\phi_s = \frac{1}{2}$
SIN $\phi_s = \frac{3}{4}$
SIN $\phi_s = \frac{7}{8}$
SIN $\phi_s = 1$
1.4
1.2
1.0
.8
.6
.4
.2
0
- 180
-90
0
+ 90
+ 180
PHASE ANGLE ϕ IN DEGREES, MEASURED FROM TIME WHEN VOLTAGE ACROSS DEE IS ZERO

FIG. 4

Equation (43) is plotted on Figure 4. Each curve represents the limits of stability for some particular machine with a constant synchronous phase, ϕ_s.

An interesting interpretation of these curves is that if a machine were designed to have the particle accept the full dee voltage each turn ($\sin \phi_s = 1$), this machine would allow no phase oscillation, and few, if any, particles would reach the target. The other extreme occurs when $\sin \phi_s = 0$. This machine would accept +180° to -180° phase oscillation; but in this case, the particle at the synchronous phase angle would not be accelerated in passing through the gap because the dee voltage at that time would be zero. Most frequency modulated cyclotrons are designed half way between these extremes ($\sin \phi_s = 1/2$).

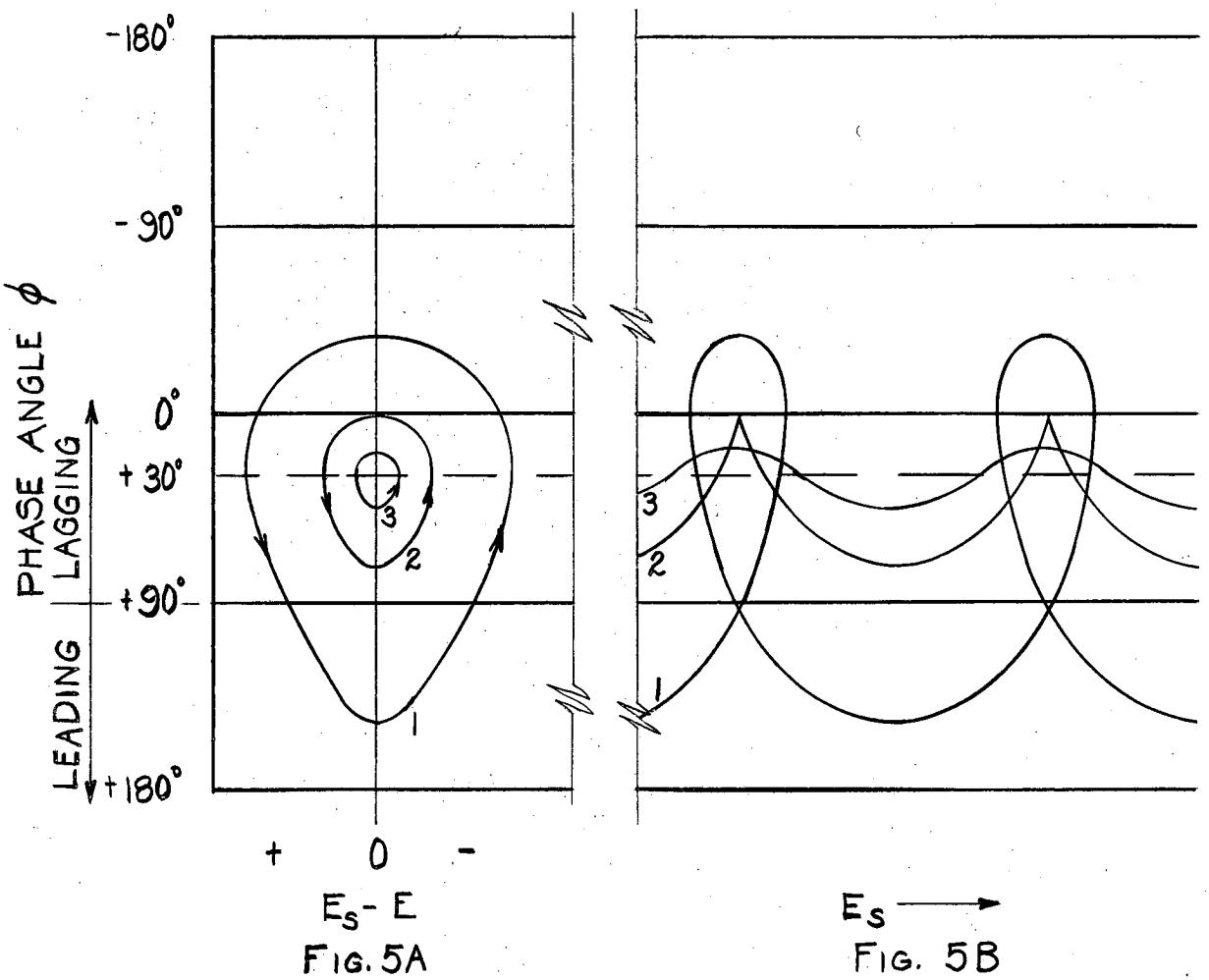

FIG. 5

Figure 5b shows the phase oscillation and corresponding energy oscillation for three different particles as the synchronous energy increases, in a machine with a synchronous phase angle of 30° ($\sin \phi_s = 1/2$). From the pendulum analogy, the phase amplitude of the particle varies as $E_s^{-3/4}$; so as the curves of Figure 5b extend many cycles to the right, their amplitude decreases. Figure 5a shows the energy and phase excursion for these same three particles for just one of the cycles. If the larger "orbit" for particle 1 happens to be the maximum stable condition, then this curve of

Figure 5a is similar to the sin $\phi_s = 1/2$ curve of Figure 4, except that it shows the plus and minus energy excursion of the particle and the axes are rotated.

Figure 6 shows the condition at the center of the cyclotron and shows the phase history of the accepted particles. All of the particles are shown as starting at the rest energy on the +90° phase line. This is in agreement with the actual conditions because of the physical arrangement of the cyclotron. The ions are continually introduced between the dees; and at first they do not

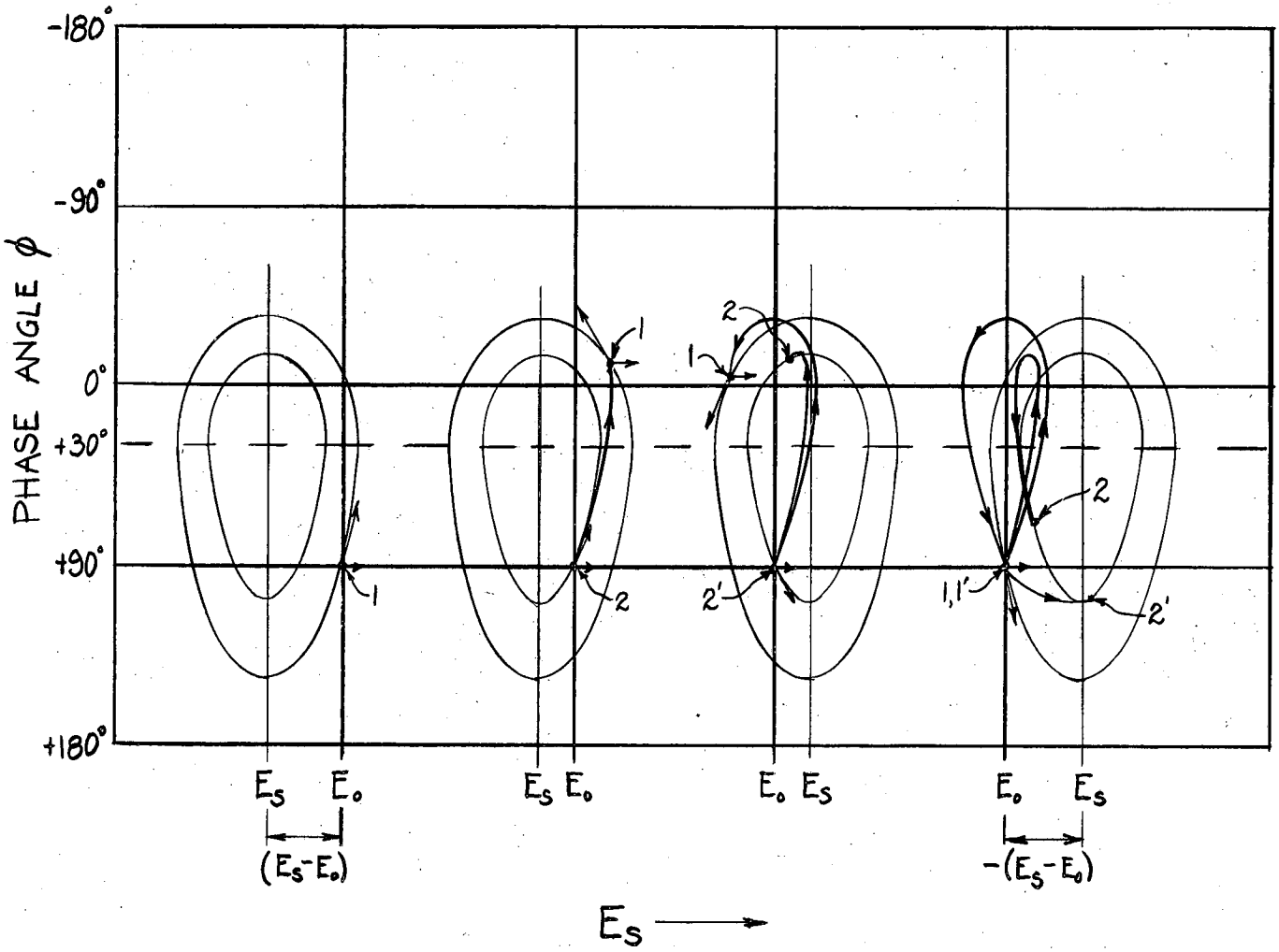

FIG. 6

have enough excursion to fully cross the gap; but by the time they do so, most are in phase with the peak voltage across the gap. In Figure 6, the synchronous energy, E_s, is moving to the right. Two displacement orbits associated with E_s are shown for each position, and the instantaneous location of each particle is labeled 1 and 2. (There are an infinite number of orbits inside the maximum stable orbit; only two are shown for clarity.) The trace each particle made is shown, and if continued, would appear as on Figure 5b. From Figure 6, a particle (1) starting on the maximum stable orbit only succeeds in arriving back at the rest energy in one phase oscillation, but particles starting on smaller orbits are accelerated. The range of particles accepted is therefore $\pm (E_s - E_o)$; and from Figure 4 ($\phi_s = 30°$, $\phi = +90°$)

$$(E_s - E_o) = \pm 0.6 \sqrt{\frac{eV_o\ E_s \times 2}{\pi}}$$

Figure 7 shows in review, the basic formulas of the frequency modulated cyclotron. Note that the starting oscillator frequency is high enough that the synchronous energy is below the rest energy.

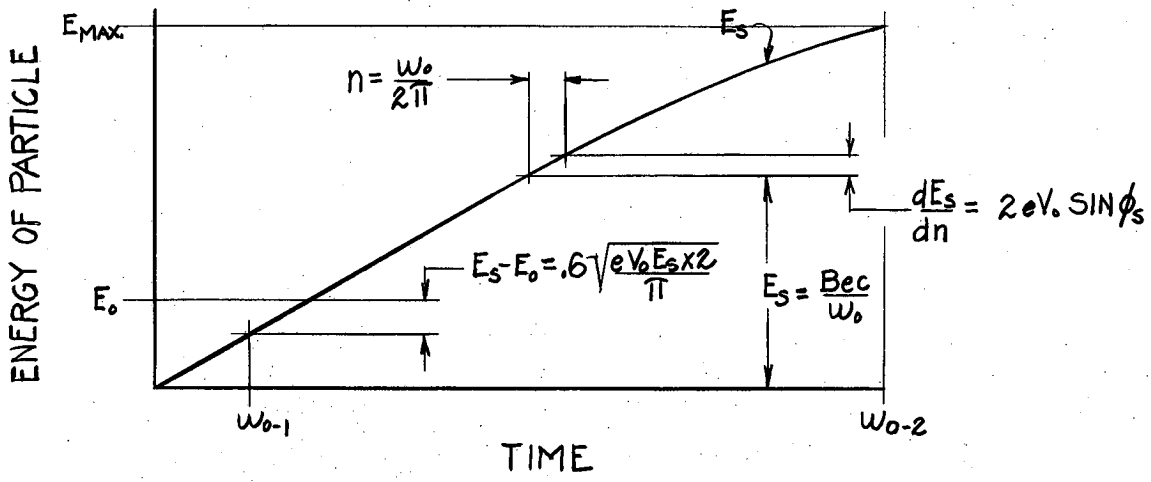

FIG. 7

The Constant Frequency Cyclotron

From Equation (2), $E_s = \frac{Bec}{\omega_o}$, there is no change in synchronous energy without a change in oscillator frequency (except for the minor change in magnetic field); so the constant frequency cyclotron is a special case of the frequency modulated cyclotron in which $dE_s/dn = o$, $\sin \phi_s = o$, and $\phi_s = o$. The voltage across the gap is zero when $\phi_s = o$; so a particle travelling at the synchronous phase angle is never accelerated. It becomes apparent, then, that this synchronous particle is not the important particle.

The pendulum analogy reduces to that of a simple pendulum, and Equation (30) becomes:

$$(\ ) \quad E_s - E = \sqrt{\frac{E_s e V_o}{\pi}} \cdot \sin \phi$$

Phase Oscillation

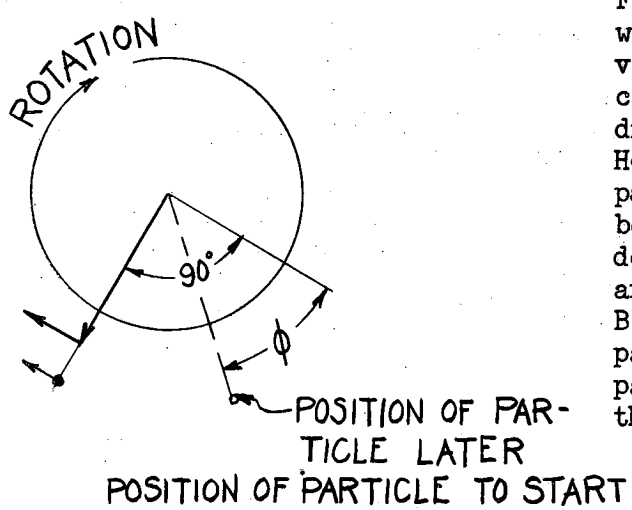

FIG. 8

Figure 8 shows the particle starting in phase with the voltage vector V_o, but it has a lower velocity and it tends to drop behind. If ϕ becomes less than zero, however, the particle drops into the decelerating phase and is lost. However, if the dee voltage is high enough, the particle will pick up just sufficient energy before reaching $\phi = o$ to fall in step with the dee voltage vector, and will then turn back and gain and pass the dee voltage vector. Curve B of Figure 9 shows the phase excursion of this particle. The dee voltage required to make the particle turn back at zero phase angle is called the "threshold" dee voltage.

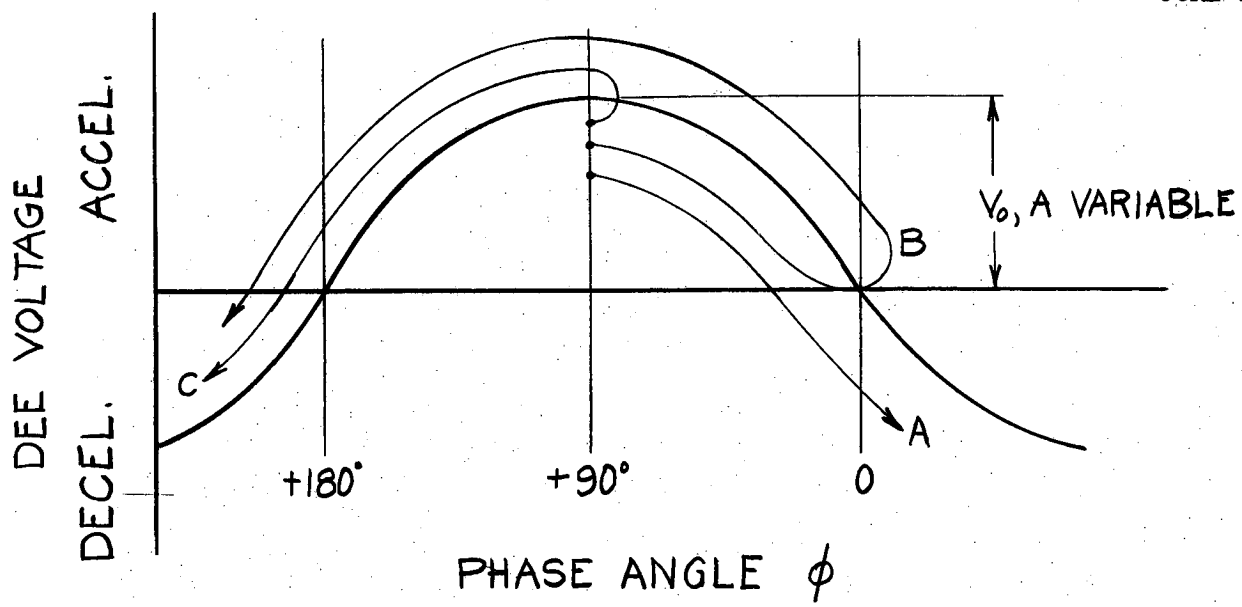
DEE VOLTAGE
ACCEL.
DECEL.
+180°
+90°
0
V_0, A VARIABLE
A
B
C
PHASE ANGLE ϕ

FIG. 9

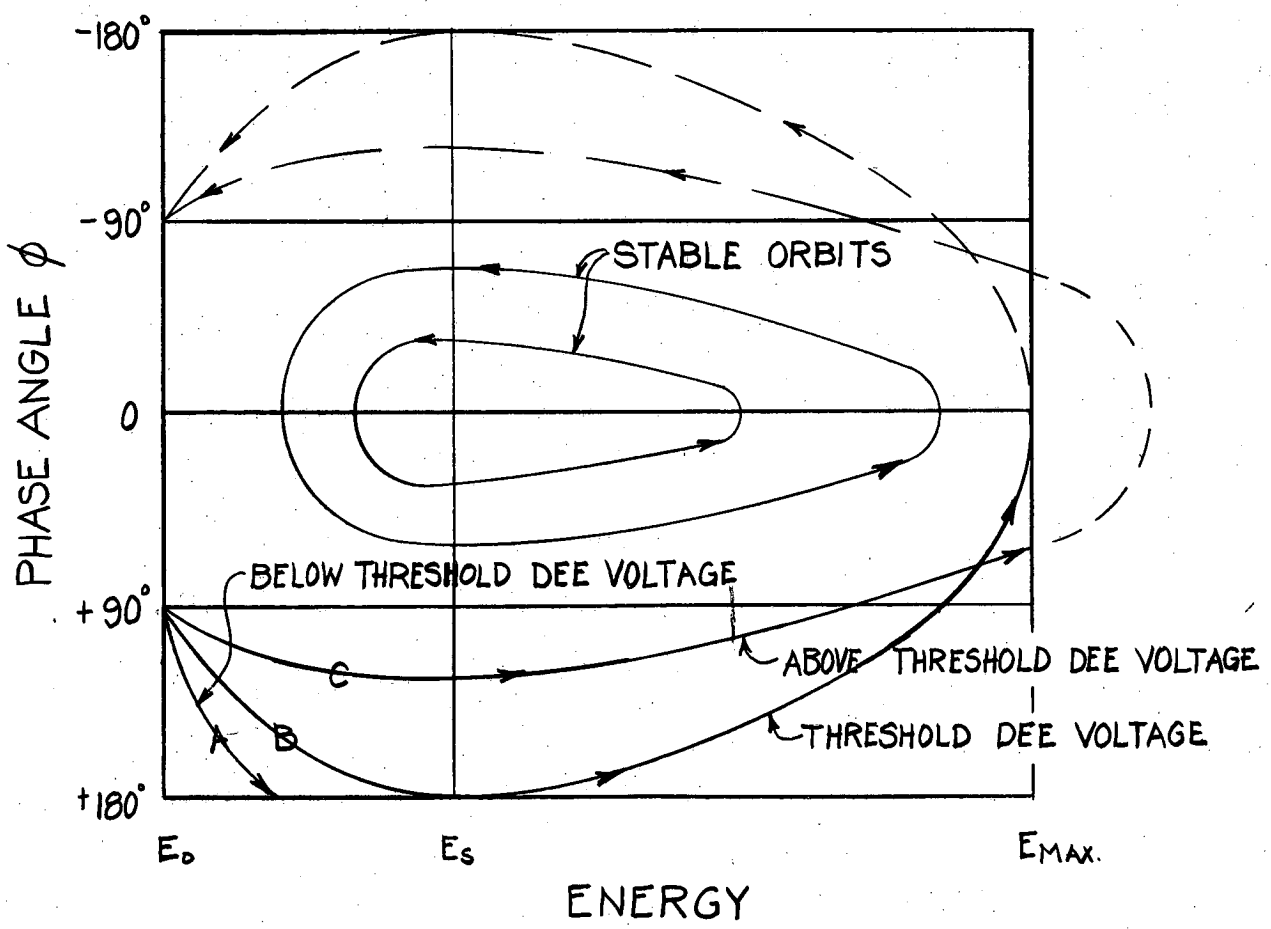
-180°
-90°
0
+90°
+180°
PHASE ANGLE ϕ
STABLE ORBITS
BELOW THRESHOLD DEE VOLTAGE
ABOVE THRESHOLD DEE VOLTAGE
THRESHOLD DEE VOLTAGE
A
B
C
E_0
E_s
$E_{MAX.}$
ENERGY

FIG. 10

This particle continues to be accelerated after it passes the voltage vector, and would continue back through +180 phase angle and into the decelerating phase if it were not removed from the machine at its maximum energy. Curve A shows that a particle not receiving the threshold voltage passes through zero phase and is lost; curve C shows a particle receiving more than the threshold voltage.

Curves A, B, and C are repeated in Figure 10 showing phase angle against energy. Figures 9 and 10 show that the constant frequency cyclotron achieves its acceleration mostly as a result of phase oscillation, and if the particle is not removed from the machine in one half cycle of phase oscillation it will proceed back to zero energy. If particles were in some manner introduced into the center region of Figure 10, they would stably oscillate in the energy ranges shown neither returning to the center nor reaching the target.