UCRL 2189

cy 2

UNIVERSITY OF CALIFORNIA

Radiation Laboratory

TWO-WEEK LOAN COPY

This is a Library Circulating Copy which may be borrowed for two weeks. For a personal retention copy, call Tech. Info. Division, Ext. 5545

BERKELEY, CALIFORNIA

UCRL-2189 c2

DISCLAIMER

This document was prepared as an account of work sponsored by the United States Government. While this document is believed to contain correct information, neither the United States Government nor any agency thereof, nor the Regents of the University of California, nor any of their employees, makes any warranty, express or implied, or assumes any legal responsibility for the accuracy, completeness, or usefulness of any information, apparatus, product, or process disclosed, or represents that its use would not infringe privately owned rights. Reference herein to any specific commercial product, process, or service by its trade name, trademark, manufacturer, or otherwise, does not necessarily constitute or imply its endorsement, recommendation, or favoring by the United States Government or any agency thereof, or the Regents of the University of California. The views and opinions of authors expressed herein do not necessarily state or reflect those of the United States Government or any agency thereof or the Regents of the University of California.

UCRL-2189
Unclassified-Instrumentation Distribution

UNCLASSIFIED

cy 2

UNIVERSITY OF CALIFORNIA

Radiation Laboratory

Contract No. W-7405-eng-48

AN ELECTRONIC VOLTAGE INTEGRATOR

Richard Madey and George Farly

April 20, 1953

Berkeley, California

AN ELECTRONIC VOLTAGE INTEGRATOR

Richard Madey and George Farly

Radiation Laboratory, Department of Physics,
University of California, Berkeley, California

April 20, 1953

ABSTRACT

An electronic voltage integrator has been used by the magnetic measurements program of the Berkeley Radiation Laboratory since 1948. The device can explore magnetic fields in the range from 500 to 15,000 gauss to an accuracy of better than one percent. The heart of the integrator consists of a direct coupled high gain amplifier that is connected in a "feedback time constant" circuit. The amplifier uses the cascode connection[2], the filament drift compensation circuit of Miller[4], and an internal positive feedback adjustment for "infinite" gain[1]. Some other features of the integrator amplifier include low grid current operation, large linear output range, and provision for adjustment of the input and the output voltages to zero potential when no signal is present.

AN ELECTRONIC VOLTAGE INTEGRATOR

Richard Madey and George Farly

Radiation Laboratory, Department of Physics,
University of California, Berkeley, California

April 20, 1953

Introduction

A sensitive, stable, and accurate electronic voltage integrator was developed by the authors in 1948 to supplement the magnetic measurements program of the Radiation Laboratory at Berkeley. The device integrates the voltage induced either in a small search coil that is moved in a static magnetic field or in a fixed coil that is placed in a changing magnetic field. The integrated voltage is proportional to the magnetic field. The integrator can be easily calibrated by means of a series connected solenoidal test coil. A rod type permanent magnet moves through this coil and produces a standard change in flux linkages. This integrator has been used to explore magnetic fields in the range from 500 to 15,000 gauss to an accuracy of better than one percent.

The heart of the integrator consists of a direct coupled high gain amplifier that is connected in a "feedback time constant" circuit. The amplifier uses the cascode connection[2], the filament drift compensation circuit of Miller[4], and an internal positive feedback adjustment for "infinite" gain[1]. Some other features of the integrator amplifier include low grid current operation, large linear output range, and provision for adjustment of the input and the output voltages to zero potential when no signal is present.

The basic circuit of the integrator is given by Greenwood, Holdam, and MacRae[1]. In addition, the various modifications that were introduced are described separately in the literature. The present description not only serves as a bibliography of the various techniques that have been utilized in combination, but also contains sufficient explanation of each feature to permit an understanding of the design, operation, and performance of the present voltage integrator circuit.

The Principle of an Accurate Voltage Integrator

The principle of negative feedback permits accurate voltage integration. If the output voltage of a conventional phase inverting amplifier, driven from a current source, is fed back without a change in phase to the input, by means of the feedback impedance of Fig. 1, then this fed-back signal tends to prevent a change in the input potential. For a sufficiently high gain amplifier, the input potential is practically unchanged. If the amplifier itself draws no current, the system produces a signal output voltage $V_o = -iZ_o$ that is practically independent of the amplifier characteristics. The input impedance of the system is very low because the input potential is changed very little by the input signal current i.

Now suppose the current i is generated by an input voltage that feeds through the impedance Z_i of Fig. 2. Then, since the change in potential at the input of the amplifier is very nearly zero, the current will have the value V_i/Z_i; therefore,

$$V_o = -i\,Z_o = -\frac{V_i}{Z_i}\,Z_o \tag{1}$$

If Z_i is a pure resistance R and if Z_o is a pure capacitive reactance $\frac{1}{j\omega C}$, then equation (1) becomes

$$V_o = -\frac{1}{j\omega RC}\,V_i \tag{2}$$

and the system shown in Fig. 3 is an accurate voltage integrator. The result that the output voltage is proportional to the time integral of the input voltage for this case follows directly from equation (2) by replacing $j\omega$ by the operator $p \equiv \frac{d}{dt}$. Thus,

$$V_o = -\frac{1}{RC}\,\frac{V_i}{p} = -\frac{1}{RC}\int V_i\,dt \tag{3}$$

Circuits of this type are often called "feedback time constant" circuits and sometimes "Miller feedback" circuits because the condenser has the same qualitative effect as grid-plate capacitance.

The High Gain Amplifier

The negative feedback configuration of Fig. 1 will not operate with accuracy unless a high gain amplifier is used. In fact, perfect operation requires infinite gain. An infinite gain amplifier may be achieved with positive feedback[1]. Figure 4 is a single-stage amplifier with a cathode follower output stage and positive feedback to the cathode. The simple feedback equation for the representation of Fig. 1 is:

$$G = \frac{A}{1 - A\beta} \tag{4}$$

where A = the gain without feedback

G = the gain with feedback

β = the fraction of the output voltage that is added to the input voltage.

Infinite gain G is obtained by adjusting the feedback factor β equal to 1/A so that the denominator in equation (4) will vanish for the psoitive feedback case. For the under regeneration case where $\beta A < 1$, G is finite and positive. For the over regeneration case where $\beta A > 1$, G is finite but negative.

The Cascode Amplifier

The grounded-cathode amplifier followed by a grounded-grid amplifier has been called the "cascode" amplifier. Wallman's[2] investigations of the grounded-cathode, grounded-grid combination showed that the cascode amplifier provides the low noise factor of a triode with the high amplification and stability of a pentode.

The Filament Drift Compensation

If the current in a vacuum tube is limited by electrode potentials and space charge rather than by cathode emission, then heater voltage variations will change the average initial velocity of the emitted electrons; therefore, for fixed electrode potentials the change in the plate current depends on the change in the heater voltage. This effect is relatively independent of the plate current for the usual d. c. amplifier case where the plate current is small compared with the cathode emission. The effect of a heater voltage variation

may be represented by the cathode voltage change that is required to keep the plate current constant. Valley and Wallman[3] give an order of magnitude figure for this effect: for oxide coated cathodes, a 10 percent increase of heater voltage is equivalent to a decrease of about 100 millivolts in the cathode potential. Thus, the effect of a change in the heater voltage can be cancelled by an equal displacement either of the cathode potential in the opposite direction or of the grid potential in the same direction.

The filament drift compensation circuit of Miller[4] was chosen as the method of cancelling the effect of variations of heater voltage. The Miller circuit is shown in Fig. 5. If the effect of a change of cathode emission is represented by a voltage ΔE in series with the cathode as shown in Fig. 5a, then Miller showed that the current through the input amplifier tube V1 is unaltered by this change provided that the resistance R_2 is chosen equal to the reciprocal of the mutual conductance g_m of the control amplifier and provided that the two cathodes have exactly equal characteristics so that $\Delta E_1 = \Delta E_2$. Perfect cancellation occurs also for the more general case $\Delta E_1 = k\,\Delta E_2$, where k is a proportionality constant, if $R_2 = k/g_2$.

This result can be obtained easily in the approximation that R_3 is large so that the current flowing in V1 can be neglected compared to that in V2. Then, in the approximate circuit of Fig. 5b, let i be the change in the plate current and let e be the change in the cathode potential that results from the variation in the heater voltage. Then, for the perfect cancellation condition that the cathode potential shall not change, the change in the grid to cathode voltage is given by $e_g = i\,R_2$. Also, if μ and r_p are the amplification factor and the plate resistance of V2, $\mu e_g = i\,r_p$ since the load resistance is negligible compared to the plate resistance. Thus, $R_2 = \frac{r_p}{\mu} = \frac{1}{g_m}$.

In practice, the Miller condition is obtained by adjusting resistance R_1 to give maximum plate current in V_1. Figure 6 illustrates the equivalence[5] of the maximum plate current criterion to the Miller condition. The analysis is again simplified in the approximation that R3 is large so that the current flowing in V1 can be neglected compared to that in V2. For the approximate Miller circuit of Fig. 5b, the curved line in Fig. 6 is a plot of the plate current against the grid to cathode voltage for the operating plate voltage of V2. The absicissa to the left of the origin represents the grid to cathode voltage V_{gk}.

Since $V_{gk} = -i_p R_1$, the slopes of lines 1, 2, and 3 are equal to the negative reciprocals of three different values of the resistance R_1. The absicissa to the right of the origin represents the grid to ground voltage $V_{gg'}$. Since $V_{gg'} = i_p R_2$, the slope of the line 4 is equal to the reciprocal of the resistance R_2. The proper operating point for the perfect cancellation condition occurs for that plate current value where the slope g_m of the grid characteristic of V2 is equal to the slope $\frac{1}{R_2}$. Since the lines 5, 6, and 7 have lengths equal to the voltages between cathode and ground, the correct operating point makes the cathode to ground potential a minimum. Minimum cathode to ground potential thus means minimum grid bias on V1 and hence maximum plate current in V1.

The Schematic Circuit Diagram

The schematic circuit diagram of the integrator is shown in Fig. 7. The direct coupled amplifier makes use of the cascode connection[2] and the cathode coupled filament drift compensation circuit of Miller[4]. The input tube is the twin triode type 6SU7. This tube is essentially a type 6SL7 that has been selected for low grid current. Low grid current operation[7] of the input amplifier minimizes slow drifts of the output. The plate voltage on the input half of the type 6SU7 is sufficient to prevent positive grid current (i.e., electron flow from cathode to grid.) The input grid is shielded from other possible leakage currents such as those resulting from neighboring high potentials. The input tube is operated in the low current region[6] for greater stability and maximum voltage gain.

In practice, since the input tube does not always satisfy the Miller requirements for perfect cancellation of heater voltage variations, the heaters are operated at reduced voltage. Changes in tube transconductance with ambient temperature, with tube life, and with tube replacement can be approximately compensated by adjustment of the filament voltage. To further minimize drifts of the output voltage when no signal is applied to the input, the unit makes use of well regulated power supplies and low temperature coefficient precision resistors. In addition, the 6SU7 input tube is installed in a shock absorbing mount to avoid mechanical disturbances.

Polystyrene capacitors were used for the integrating condensers because this type was found to have the smallest hysteresis effect. The hysteresis effect in capacitors is the gradual build-up of voltage after a charged capacitor has been discharged. This voltage build-up is increased

if the duration of the short circuit across the capacitor is reduced. This hysteresis effect seems to be smallest in capacitors with homogeneous dielectrics (e.g., polystyrene)[9].

The sensitivity of the integrator can be changed by means of the high-low sensitivity switch S1 which selects either the low sensitivity 0.1 microfarad integrating capacitor or the high sensitivity 0.01 microfarad integrating capacitor.

The Regeneration Control

The output voltage of the integrator is plotted in Fig. 8, for different regeneration adjustments[1], as a function of the input grid voltage. Curve A represents the output versus input voltage characteristic with no positive feedback. Curve B represents the characteristic when the regeneration control is properly adjusted to give infinite gain. Curve C represents the case of too much regeneration. In this case the gain is negative over a portion of the output voltage range. The whole curve C is traced out if the integrating resistor R and capacitor C are connected; otherwise, the curve is unstable. Without the integrating capacitor, the output would jump along one or the other of the dashed lines as the input grid voltage is raised or lowered. In practice, the integrating capacitor is disconnected by opening switch S in Fig. 8. The magnitude of the jump is a rough measure of the output range of the integrator when the regeneration setting is at or near the proper adjustment.

Another simple test is made for the correct regeneration setting by inserting a coil and permanent magnet in series with the integrator input. The output of the integrator will change when the magnet is moved. With the correct amount of regeneration, the new output level should not drift. The rate and direction of drift after a flux change indicates the degree and type of incorrect regeneration. Excessive regeneration will cause drift in the direction of the previous flux change; whereas, too little regeneration will produce a drift in the opposite direction.

The Range of the Output Voltage

The range of the output voltage V_o of the circuit of Fig. 8 can be as large as 175 volts; however, the maximum usable range of about 50 volts occurs with the low sensitivity 0.1 microfarad integrating condenser. The output varies over a range of only 10 or 20 volts for the usual measurements

that are made by the Berkeley magnetic measurements group. The output voltage will be linear throughout the region of infinite gain. The straight line portion of curve B of Fig. 8 is the region of infinite gain. Since only a small fraction of the total output range need actually be used, small deviations from the correct regeneration adjustment should not affect the linearity of the output near the center of the range. In practice, the integrator is calibrated by means of a series connected solenoidal test coil. A rod type permanent magnet can be moved through this test coil to produce a standard change in flux linkages.

If the voltage of the battery in series with the output lead is taken equal to the mid-point of the output voltage range as measured at the cathode of V4, then the mid-range output potential of the integrator will be near or at ground potential. As indicated in Fig. 8, the input grid potential must be positive with respect to ground for the correct regeneration curve B. This constant positive potential is maintained by means of an auxiliary bias supply that is connected in series with the signal input. A typical bias supply circuit or e.m.f. panel is given in Fig. 9. This bridge circuit permits any desired voltage in the range from minus 1.5 volts to plus 3.0 volts to be applied to the grid. In addition, the slow and fast push buttons on the e.m.f. panel provide positive and negative test signal voltages for the integrator. These test signals are most useful in adjusting the output voltage of the properly balanced integrator to any desired stable value within the useful output range.

Application to Magnetic Measurements

If the input voltage to the integrator is given by the voltage induced in a search coil, the output voltage of the integrator is proportional to the change in the magnetic flux linkages. In particular, if

$$V_i = -N\frac{d\phi}{dt} = -NA\frac{dB}{dt} \tag{4}$$

then equation (3) viz., $V_o = -\frac{1}{RC}\int V_i dt$ gives

$$V_o = 10^{-8}\frac{N}{RC}\Delta\phi = 10^{-8}\frac{NA}{RC}\Delta B \tag{5}$$

Typical values for the parameters in equation (5) are as follows:

Input series resistance	$R = 2.0$ megohms
Integrating capacitor	$C = 0.1$ microfarad
Search coil equivalent area	$NA = 25,000$ turn - cm^2

(Search coil dimensions: 3/4 inch diameter x 3/8 inch thick)

Since the linear range of output voltage V_o is greater than 25 volts, with the above values of the parameters the system can measure more than 5×10^8 line turns of flux change, or more than a 20,000 gauss change in the magnetic field. In a typical run, the search coil is moved in synchronism with the chart of a recording self-balancing potentiometer. As the search coil is moved in and out of the field, the record retraces itself and should close if no drift errors occur. A run of four minutes in duration with a closing error of 10^6 lines is considered good. The synchronous motions of the chart and search coil are correlated by synchronous motors powered from a common source or by synchros, or by a potentiometer servo. An elementary circuit diagram of the integrator and recording system that is used by the magnetic measurements group is given in Fig. 10.

REFERENCES

1. I. A. Greenwood, J. V. Holdam, and D. MacRae. "Electronic Instruments". M. I. T. Radiation Laboratory Series 21, 81, (McGraw Hill, 1948).

2. H. Wallman, A. B. Macnee, and C. P. Gadsen, "A Low-Noise Amplifier", Proc. I. R. E. 36, 700, (June, 1948).

3. G. E. Valley and H. Wallman, "Vacuum Tube Amplifiers", M. I. T. Radiation Laboratory Series 18, 458, (McGraw Hill, 1948).

4. S. E. Miller, "Electronics", 14 (11), 27 (1941).

5. F. J. M. Farley and H. E. Gove, "An Inverse Feedback D.C. Amplifier", Chalk River Laboratory Report CRP-288.

6. G. E. Valley, Jr. and H. Wallman "Vacuum Tube Amplifiers", M. I. T. Radiation Laboratory Series 18, 414-418, (McGraw Hill, 1948).

7. G. E. Valley, Jr. and H. Wallman "Vacuum Tube Amplifiers", M. I. T. Radiation Laboratory Series 18, 418-421, (McGraw Hill, 1948).

8. Manufactured by the John E. Fast Company, 3123 N. Pulaski Road, Chicago 41, Illinois.

9. J. R. Weeks, "Development of Polystyrene Condensers", Elec. Mfg., 146 (April, 1946).

LIST OF ILLUSTRATIONS

Fig. 1 A phase inverting, high gain, direct coupled amplifier and feedback impedance.

Fig. 2 A voltage negative feedback system.

Fig. 3 An accurate voltage integrator.

Fig. 4 An amplifier with positive feedback.

Fig. 5 The Miller filament drift compensation circuit.

Fig. 6 A graphical illustration of equivalence of maximum V1 plate current criterion to Miller perfect compensation condition $g_m = \frac{1}{R_2}$.

Fig. 7 The cascode integrator.

Fig. 8 The output voltage of the integrator versus the input grid-to-ground voltage for three different settings of the regeneration control.

Fig. 9 The E. M. F. panel.

Fig. 10 The integrator and the recording system used for magnetic field measurements.

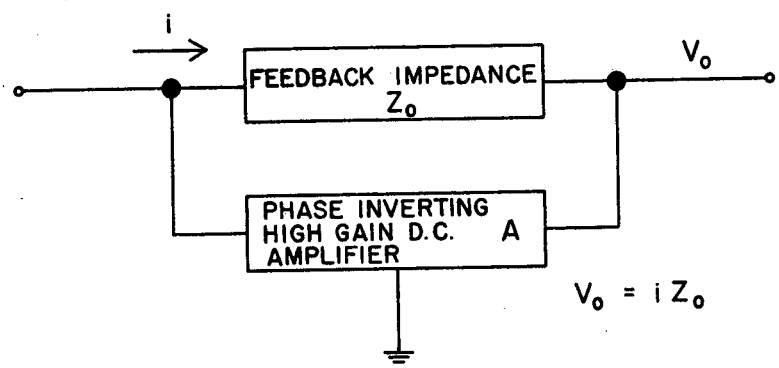
i
FEEDBACK IMPEDANCE
Z_0
V_0
PHASE INVERTING
HIGH GAIN D.C.
AMPLIFIER
A
$V_0 = i Z_0$

MU-5424

Fig. 1

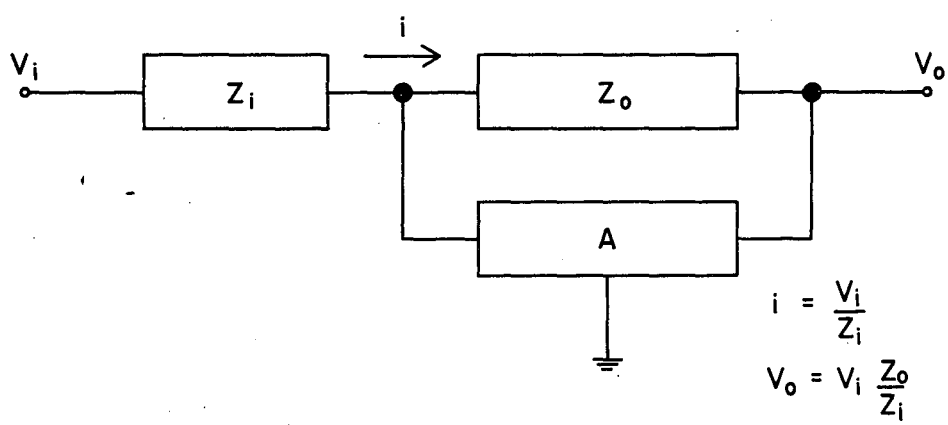

MU-5425

Fig. 2

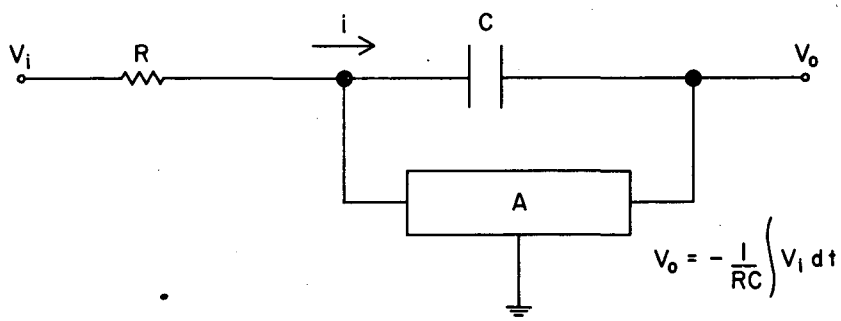

MU-5426

Fig. 3

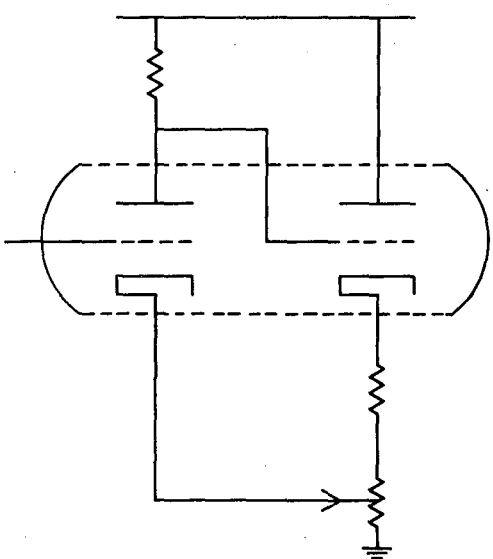

MU-5428

Fig. 4

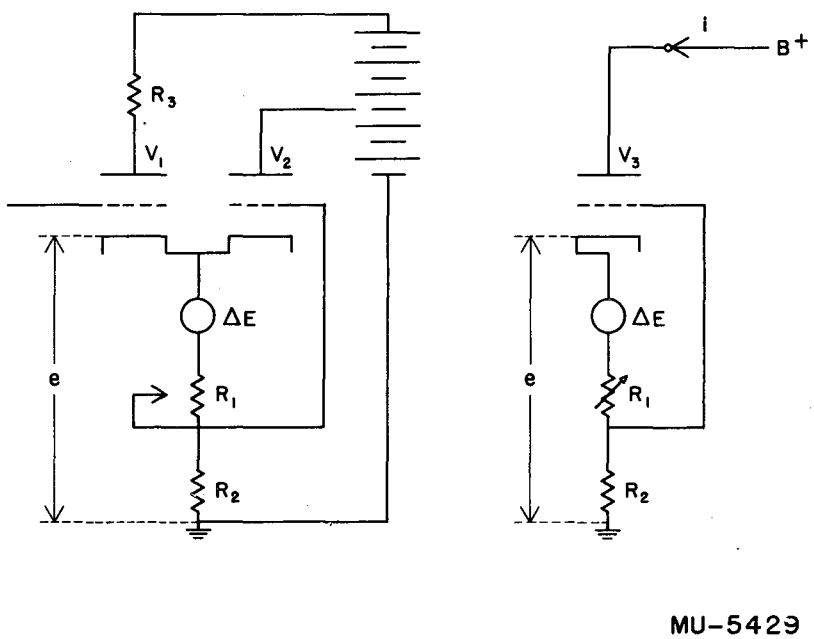

Fig. 5

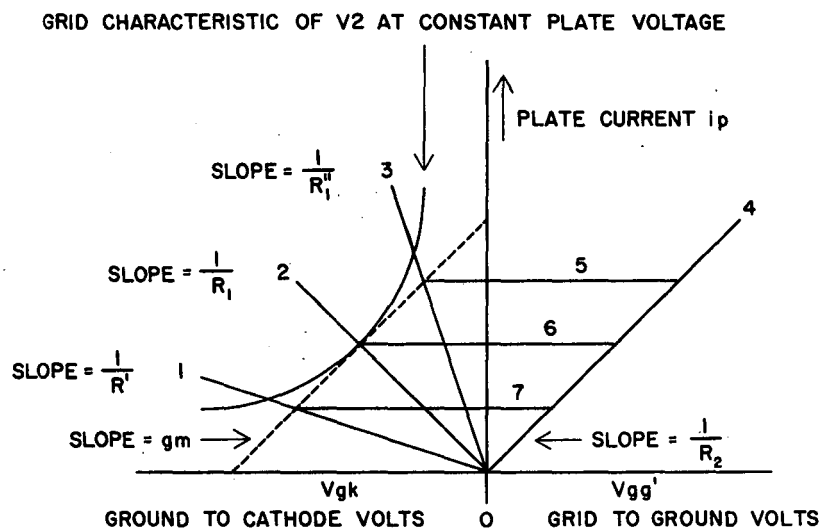
GRID CHARACTERISTIC OF V2 AT CONSTANT PLATE VOLTAGE
PLATE CURRENT ip
SLOPE = 1/R1''
3
4
SLOPE = 1/R1
2
5
6
SLOPE = 1/R'
1
7
SLOPE = gm
SLOPE = 1/R2
Vgk
Vgg'
GROUND TO CATHODE VOLTS
0
GRID TO GROUND VOLTS

MU-5431

Fig. 6

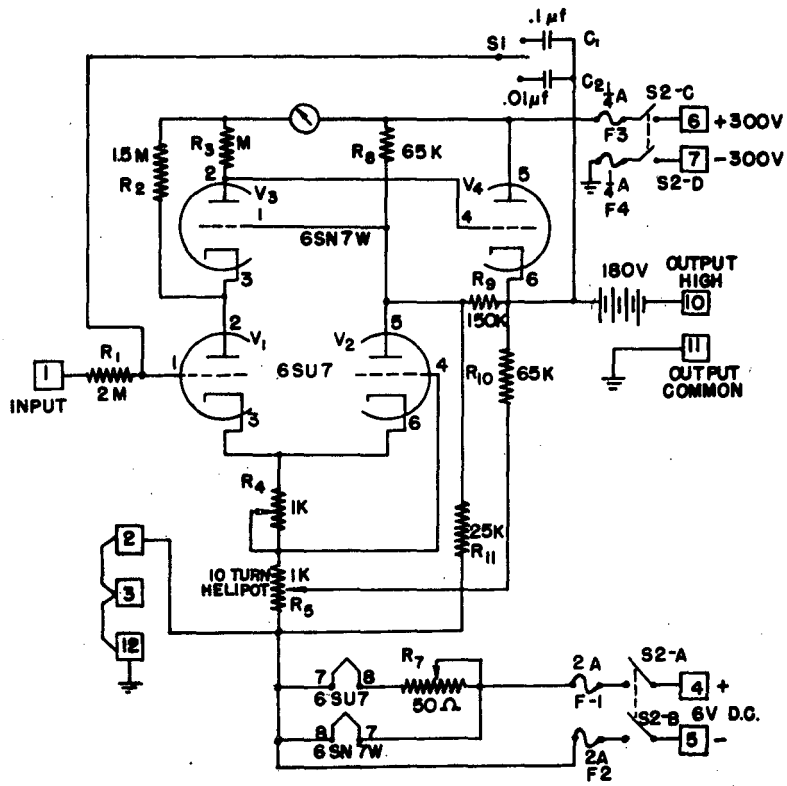

FIG. 6

CASCODE INTEGRATOR

MU 3220

Fig. 7

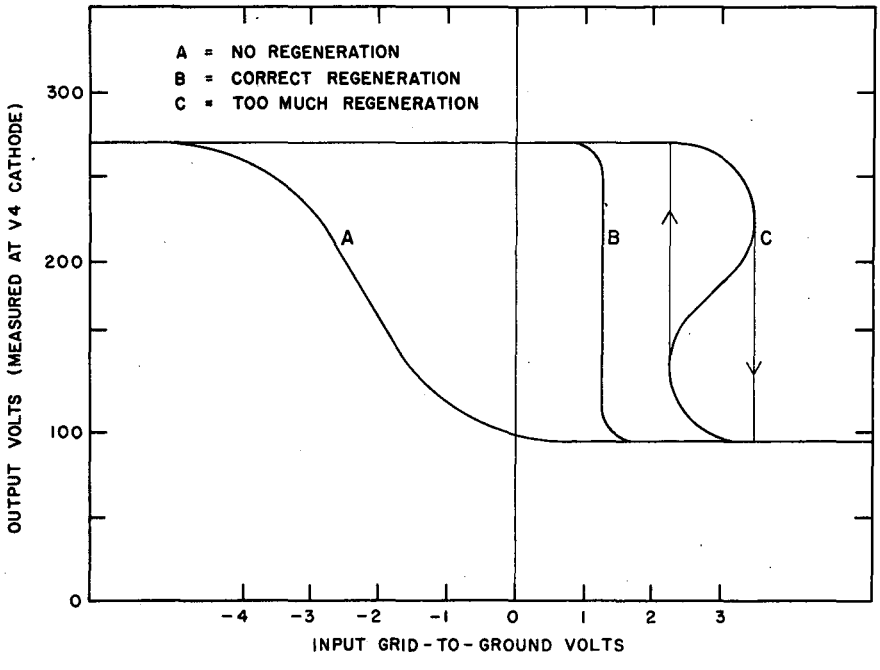
A = NO REGENERATION
B = CORRECT REGENERATION
C = TOO MUCH REGENERATION
OUTPUT VOLTS (MEASURED AT V4 CATHODE)
300
200
100
0
A
B
C
-4
-3
-2
-1
0
1
2
3
INPUT GRID-TO-GROUND VOLTS

MU-5427

Fig. 8

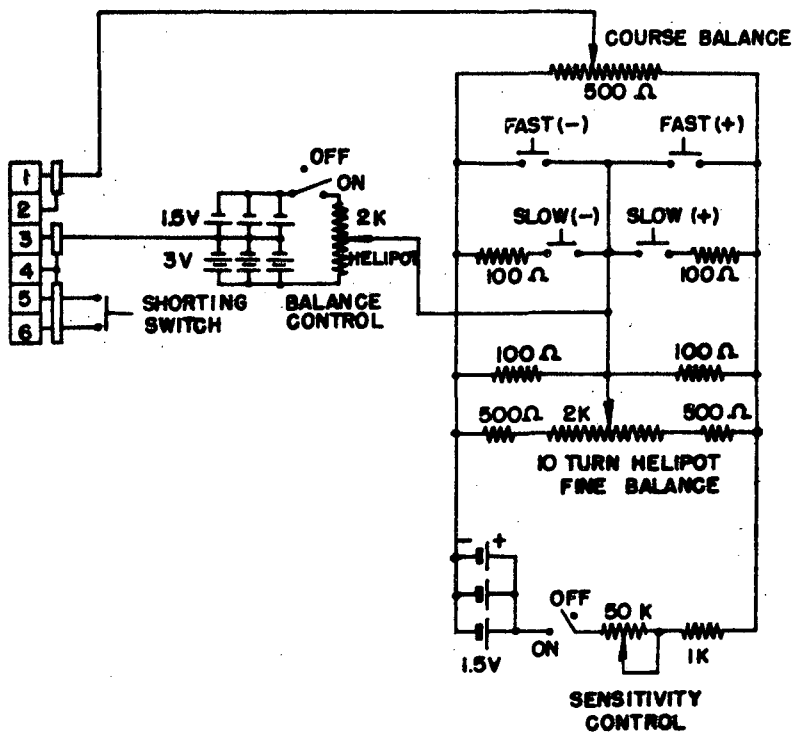

FIG. 7

EMF PANEL

MU3221

Fig. 9

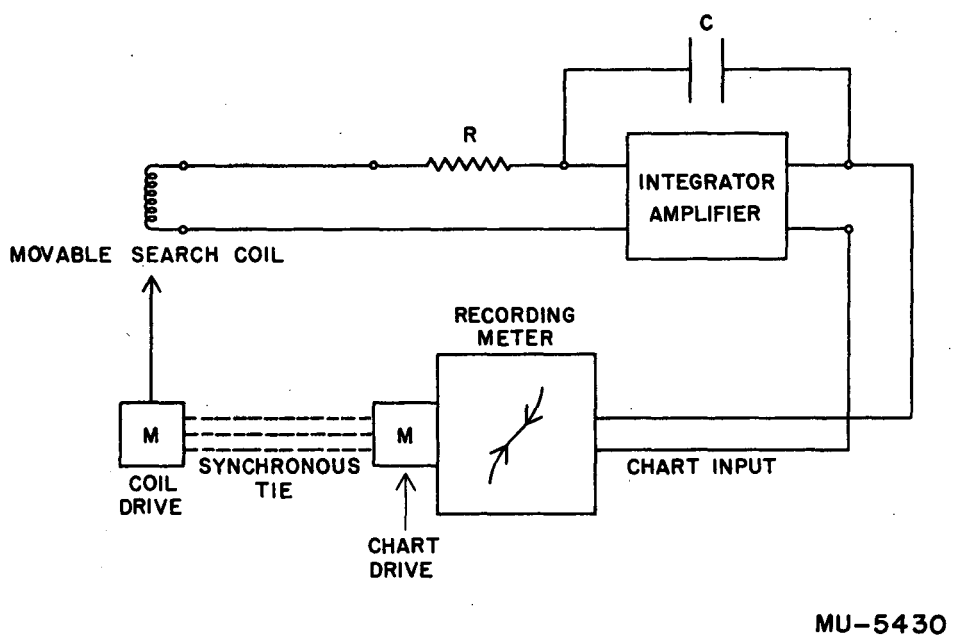
C
R
INTEGRATOR
AMPLIFIER
MOVABLE SEARCH COIL
RECORDING
METER
M
M
COIL
DRIVE
SYNCHRONOUS
TIE
CHART INPUT
CHART
DRIVE
MU-5430

Fig. 10