UCRL 2320

UNCLASSIFIED

UNIVERSITY OF CALIFORNIA

Radiation Laboratory

TWO-WEEK LOAN COPY

This is a Library Circulating Copy which may be borrowed for two weeks. For a personal retention copy, call Tech. Info. Division, Ext. 5545

BERKELEY, CALIFORNIA

DISCLAIMER

This document was prepared as an account of work sponsored by the United States Government. While this document is believed to contain correct information, neither the United States Government nor any agency thereof, nor the Regents of the University of California, nor any of their employees, makes any warranty, express or implied, or assumes any legal responsibility for the accuracy, completeness, or usefulness of any information, apparatus, product, or process disclosed, or represents that its use would not infringe privately owned rights. Reference herein to any specific commercial product, process, or service by its trade name, trademark, manufacturer, or otherwise, does not necessarily constitute or imply its endorsement, recommendation, or favoring by the United States Government or any agency thereof, or the Regents of the University of California. The views and opinions of authors expressed herein do not necessarily state or reflect those of the United States Government or any agency thereof or the Regents of the University of California.

UCRL-2320

UNIVERSITY OF CALIFORNIA

Radiation Laboratory

Contract No. W-7405-eng-48

THE LIQUID SCINTILLATION COUNTING OF TRITIUM AND C^{14}-LABELED COMPOUNDS

Donald J. Rosenthal and Hal. O. Anger

August 21, 1953

Berkeley, California

THE LIQUID SCINTILLATION COUNTING OF TRITIUM AND C^{14}-LABELED COMPOUNDS*

Donald J. Rosenthal** and Hal. O. Anger

Donner Laboratory of Medical Physics and the
Radiation Laboratory, University of California
Berkeley, California

August 21, 1953

Following the studies reported by Kallman and Furst concerning the transfer of energy in solutions[1, 2], great interest was aroused in the liquid-scintillator counting of radioactivity. In the past few years, many and varied applications of this technique have been described in the literature. As part of the program of metabolic research being conducted at this laboratory, low-energy beta emitters have been employed as tracers, and it was decided to investigate the use of the liquid-scintillator counter in the measurement of their specific activities. It is the purpose of this paper to describe an instrument we have developed whereby the very low energy beta particles emitted by H^3 and C^{14} may be counted with relative ease, rapidity and accuracy, using equipment available in nearly all laboratories measuring radioactivity.

APPARATUS:

Figure 1 is a drawing of the basic unit of the counter--the photomultiplier tube, its preamplifier, the lighttight sample holder, and the surrounding lead shield. This equipment is placed on the floor of a 7-cubic-foot lid-opening deep freeze unit fitted with an adjustable temperature control.

---

* This work was carried out under the auspices of the U. S. Atomic Energy Commission, and supported, in part, by a grant from the National Institute of Health, U.S.P.H.S.

** Postdoctorate Research Fellow of the National Heart Institute.

The photomultiplier tube (Dumont K-1177) was chosen because of its very high signal-to-noise ratio. It has a cesium-centimony photocathode with a window area of 1.8 square inches, and an S-9 spectral response, with maximum sensitivity at about 4800 Å. The preamplifier is a 3-tube unit, with a gain of 30, and input sensitivity of about 3 millivolts when used with the scaler described below. It is built into the small chassis which holds the photomultiplier tube socket in order to reduce the pickup of extraneous electrical interference. A cathode follower furnishes a low-impedance output circuit to further reduce interference.

The leads from the preamplifier are carried out of the freeze unit directly to a scale of 256 scaler, designed at the Radiation Laboratory for use with scintillation counters. It has an input sensitivity of 0.1 volt. The input amplifier of the scaler, and the preamplifier, are stabilized in gain by means of negative feedback. The high voltage required for the multiplier tube is obtained from a regulated variable power supply built into the scaler, and is applied across a conventional voltage divider network connected to the photo-tube. The signal is taken from the next to last dynode, since the scaler preamplifier requires a positive input pulse.

The inner surface of the aluminum sample holder has the shape of a truncated cone, and is coated with several smooth layers of white Tygon enamel, so as to reflect as much of the light as possible down towards the photocathode. The vessels that actually contain the scintillator solution are 3-dram polyethylene-stoppered capsule vials. Because of their low cost, and to avoid contamination problems, these vials are used for only one sample, and then discarded. The vials have a slightly concave bottom surface, and are optically coupled to the slightly convex window of the photomultiplier tube by means of a medium-viscosity silicone fluid.

MATERIALS:

The tritiated stearic acid used to test the counter was prepared as described previously.[3] Its specific activity was determined by the ionization-chamber method, standardized against H^3 gas samples originally measured at Argonne National Laboratory and diluted manometrically in our laboratory. The C^{14}-labeled cholesterol was prepared by biosynthesis, and its specific activity was assayed by the ionization-chamber system, calibrated with a National Bureau of Standards sample of C^{14}-barium carbonate.

All of the organic solvents and scintillators used in this study were of the ordinary commercial reagent grade, and were not further purified.

EXPERIMENTAL:

Figure 2 shows the effectiveness of cooling the photomultiplier tube in reducing the thermal noise background. The actual tube temperatures are 10°-15° C. higher than those shown in the figure, owing to heat produced in the preamplifier and conducted up into the tube by the electrical contacts.

The counting efficiency for the tritium beta particles and radiation background varied only a fraction of a percent over the temperature range studied. The thermal noise background rate, however, was reduced to one-sixth its value at room temperature by placing the counter in an environmental temperature of 10° C. Below this temperature, the decrease in thermal noise per degree reduction in temperature is very much less; when the instrument is operated below 10° C. it is relatively insensitive to small temperature fluctuations.

According to Wouters[4], the sharp rise in the thermal noise curve in the region 10°-25° C. is due to the presence in the tube, at this latter temperature, of cesium vapor molecules. Cooling the tube reduces the vapor pressure of the cesium sufficiently to abolish this phenomenon, and thermionic emission from the cathode is then the predominant cause of the tube noise.[5]

The counting rates obtained when known amounts of H^3-labeled stearic acid or C^{14}-labeled cholesterol were added to aliquots of seven different liquid-scintillator solutions are shown in Table I. The most efficient solutions were the xylene-terphenyl-diphenylhexatriene and phenylycyclohexane-terphenyl-diphenylhexatriene solutions. Benzene freezes at 5.5° C., but it of interest to note that a relatively good counting rate was obtained with this solvent even though the sample was solidly frozen and no longer transparent. However, for routine use, frozen samples are unsuitable, since their translucency varies with the rate of freezing.

Because we are primarily interested in counting labeled lipids, solubility studies were carried out to see which of the above-mentioned scintillator solutions was the better solvent for fatty acids and cholesterol. The xylene solution dissolved 2 to 3 times as much fatty acid as did the phenylcyclohexane, at -20° C.

TABLE I.

Relative Efficiencies of Scintillator Solutions

Solution	Efficiency of counting (per cent)
A) Samples contained C^{14}-labeled cholesterol (7,200 dpm). Counter at 18° C.	
Benzene - terphenyl (5 g/l)	38
Dioxane - terphenyl (5 g/l)	0
Xylene - terphenyl (5 g/l)	57
Xylene - terphenyl (5 g/l) - diphenylhexatriene (0.015 g/l)	70
Phenylcyclohexane - terphenyl (3 g/l) - diphenylhexatriene (0.015 g/l)	76
B) Samples contained H^3-labeled stearic acid (32,500 dpm). Counter at 2° C.	
Benzene - terphenyl (5 g/l)*	22.5
Xylene - terphenyl (5 g/l)	24.3
Xylene - terphenyl (5 g/l) - diphenylhexatriene (0.015 g/l)	29.8
Phenylcyclohexane - terphenyl (3 g/l)	23.5
Phenylcyclohexane - terphenyl (3 g/l) - diphenylhexatriene (0.015 g/l)	29.1
C) Samples contained H^3 - labeled stearic acid (32,500 dpm). Counter at -20° C.	
Xylene - terphenyl (5 g/l) - diphenylhexatriene (0.015 g/l)	32.4
Benzene - terphenyl (5 g/l)*	3.9
Benzene - terphenyl (5 g/l) - diphenylhexatriene (0.015 g/l)*	10.6

* Sample was solidly frozen.

To confirm the results obtained in the preceding experiment, since it has been reported that terphenyl in xylene is a poor scintillator for use at reduced temperatures, owing to its insolubility [6], a solution was prepared containing 5 g/l terphenyl in xylene, with 0.015 g/l diphenylhexatriene added. Aliquots were stored at 20°, 0°, -10°, and -30° C. for two days. Some terphenyl did crystallize out of solution at the lower temperatures, but when identical amounts of tritium activity were added to 4 ml portions of the supernatants, the decrease in counting rate with the weaker solutions was less than 10 percent. Judging from the curve of the relative intensity of fluorescent light vs concentration of terphenyl in xylene, reproduced in Kallman's paper[1], this result is to be expected, since the slope of the curve is quite small between concentrations of 3.5 and 5.0 g/l.

All the subsequent experiments were done with the xylene-terphenyl-diphenylhexatriene solution, prepared as described above, but allowed to stand at -10° C. for several days. After the crystals were removed, the solution was stored at room temperature. The freezing unit was set to maintain a temperature of -10° C.

No intensive study of the various scintillator poisons was carried out. However, Table II shows the effect on the counting rate of the additions of non-radioactive stearic acid or cholesterol. Neither of these substances is a potent quenching agent. Alcohol did not decrease the counting rate either, but carbon tetrachloride completely quenched the scintillations, even in very low concentrations (2 drops per 4 ml of scintillator).

Figure 3 shows the counting rates obtained for H^3 and C^{14} samples of equal activity as the photomultiplier tube voltage was varied. The maximum efficiency for tritium, 49 percent was obtained at 1500 volts, but the background count was 2,680 cpm. At 1300 volts, the efficiency for tritium was 33 percent, and the background was only 630 cpm. At this voltage, the instrument has about the same sensitivity and background level for counting H^3 as the ionization-chamber method. Owing to the more energetic beta particles from C^{14}, the efficiency of the counter for C^{14} is much higher. Efficiencies approaching 100 percent were recorded with background rates of about 150 cpm, and 60 per cent efficiency was accompanied by a background count of only 45 cpm. The slight increase in the C^{14} curve above 1050 volts, where the apparent efficiencies

TABLE II.

Effect of Addition of Nonradioactive Stearic Acid or Cholesterol on the Counting Rate of a Tritiated Fat Sample

Weight of added material	CPM
0 mg stearic acid	11480
5 mg stearic acid	11280
10 mg stearic acid	11060
15 mg stearic acid	11125
20 mg stearic acid	11050
25 mg stearic acid	11140
30 mg stearic acid	10780
50 mg stearic acid	10600
60 mg stearic acid	10980
0 mg cholesterol	9688
4 mg cholesterol	9623
6 mg cholesterol	9700
8 mg cholesterol	9645
12 mg cholesterol	9602
16 mg cholesterol	9535
20 mg cholesterol	9583

are greater than 100 percent, is due to double pulsing. The tritium beta particles produce pulses which are of low amplitude. The more energetic C^{14} radiation, however, produces pulses which are so much higher that, when the tube is being operated above a certain gain setting (1050 volts in this case), a poor transient response in the amplifier results in doubling of some of the pulses. When P^{32} was counted, this phenomenom of double pulsing was present at tube voltages higher than 950 volts. However, double pulsing does not occur with tritium samples at any voltage up to 1500 volts. It must be pointed out, then, that no one voltage setting will serve for the counting of all the different radioactive isotopes.

To study the accuracy of the counter, a group of samples was prepared containing known quantities of tritiated stearic acid of high specific activity (11.7 microcuries/mg). The weakest sample contained 1.46×10^{-3} microcuries, and the most active one had 5.86×10^{-2} microcuries of the active stearic acid. Figure 4 is a plot of the counting rate vs the volume of the standard radioactive fatty acid solution used to prepare the sample. The maximum deviation from the expected counting rate was 1.5 percent.

Figure 5 is a frequency histogram of the distribution of 244 successive 90-second counts of a weak tritium sample, together with a superimposed normal curve. A special count-rate recorder[7] was connected to the scaler output to obtain these data. The theoretical standard deviation, using the formula $\sigma = \sqrt{\frac{N}{t}}$, was 1.65. The value calculated from the actual frequency distribution was 1.65. To check on the stability of the scaler over a longer period of time, and also to ascertain the reproducibility of the whole counting process, including the introduction of the sample into the counter, one sample was counted 50 times in six weeks. The standard deviation of the set of measurements thus obtained was 2 percent.

Table III shows the effect of varying the volume of liquid scintillator solution added to the samples. The relatively small change in counting rate with a fourfold increase in volume indicates that absorption of the emitted light by the solution itself is small, and that the reflector is quite efficient. The concentration of diphenylhexatriene is not critical either, as shown by the results in Table IV.

TABLE III.

Effect on Counting Rate of Volume of Liquid Scintillator.*

Volume (cc)	CPM
1.0	10971
2.0	10723
3.0	10517
4.0	10693

* One sample used for all four measurements. Xylene-terphenyl-diphenylhexatriene scintillator.

TABLE IV.

Effect of Concentration of Diphenylhexatriene.*

Concentration	CPM
0.015 g/l	8774
0.030 g/l	8808
0.060 g/l	8820

* Same tritium activity in all 3 samples. Basic solution was xylene-terphenyl (4 g/l).

Since the need frequently arises to count tritium-labeled water or water-soluble compounds, it was thought desirable to explore this use of the counter. With the method suggested by Hayes[8] as a basis, it was found that good counting efficiencies could be obtained if a 5 percent solution of the water or aqueous solution was made up in absolute ethanol, and 1 ml of the alcoholic solution was mixed with 3 ml of the liquid scintillator. Table V shows the counting rates obtained from serially diluted tritium water samples, using this method of achieving miscibility of the water and xylene. Lower alcohol concentrations resulted in layering of the solutions when they were cooled to the temperature of the phototube. Higher concentrations of the alcohol solution in the final sample, such as 2 ml of the 95 percent alcohol solution with 2 ml of the scintillator, resulted in a reduced counting rate due to the decrease in the effective volume of the scintillator.

TABLE V.

Tritium Water Counting.*

Activity in sample	CPM**	Efficiency
29,450 dpm	4,600	15.6 %
14,725 dpm	2,355	16.0 %
7,360 dpm	1,203	16.3 %
3,680 dpm	588	16.0 %

* Sample preparation described in text.

** Background of 640 cpm already subtracted.

Finally, to determine whether the good results obtained with the counter in measuring the activity of weak beta particles were due to the inadvertent selection of an unusually good photomultiplier tube, the performance characteristics of four tubes were compared. Figure 6 is a plot of counting rate vs voltage applied to the tube when the same standard tritium sample and background counting rates were measured at varying voltages, with all four tubes. The similarity of the curves is quite striking, and any of the tubes would serve satisfactorily in the counter.

DISCUSSION:

Until the liquid scintillation counter was developed, the standard technique for measuring tritium activities in this laboratory was the ionization chamber-vibrating reed electrometer method described previously.[9] While this method usually gives satisfactory results, preparation of samples is difficult and time-consuming. A vacuum system, with all the troubles inherent therein, is needed to fill the chambers. Also, during the combustion process, or the reduction of the water vapor to hydrogen by passage over hot zinc, enough of the tritium exchanges with the hydrogen atoms in the glass of the containers so that "memory" effects are noted. Since it is usually necessary to keep the ionization chambers on the electrometer for at least an hour to get an accurate count, the number of samples which can be counted in a day with one instrument is quite small. At very low levels of activity, the accuracy and precision of the method are quite poor. Lastly, the cost of the chambers, vibrating reed electrometer, and recording potentiometer is usually prohibitive for the average isotope laboratory.

The liquid-scintillator method of counting has none of these disadvantages. Preparation of most of the samples requires only that a known weight of the active material be placed in a sample vial. The scintillator is then added, the vial carefully agitated to dissolve all the solid material, and after a few hours of cooling in the deep freeze, the sample is ready for counting. The saving in time and equipment is considerable. Although the length of time required for counting depends on the desired accuracy, it is usually possible to count 20 to 30 samples in an eight-hour day with one instrument. The stability of the counting efficiency and background are such that the error in counting samples

whose activity is equal to, or as low as, half the background counting rate depends, for the most part, on the length of time one counts the sample, and not on peculiarities of the counter itself (as is the case with the ionization chambers we have used). "Memory" effects are avoided by using the sample vials only once. Lastly, the major components are available commercially, and are relatively inexpensive.

There are several precautions which must be observed when using this type of counter, however. The color of the liquid scintillator solution must not be altered by the material which is to be dissolved in or mixed with it for counting. The emission spectrum of the xylene-terphenyl-diphenyl-hexatriene solution lies between 3200-4800 Angstroms. Part if not all of this radiation would be absorbed by any substance which produces a colored solution when dissolved in the scintillator. As reported by Kallman[2], the other efficient scintillator solutions have very similar emission spectra, and therefore using them would not alter the situation.

The second precaution which must be taken is to be certain that the sample to be counted does not contain a scintillator "poison". These systems are susceptible to quenching by a wide variety of organic substances, presence of which would obviously preclude the use of this counting method. It is a relatively simple matter to ascertain their presence, however.

Finally, the samples must be precooled and kept in the dark before they are counted. If a sample at room temperature is placed on the window of the photomultiplier tube, it will warm it and raise the background count temporarily. In addition, if the sample has been exposed to bright light before being placed in the counter, the initial counting rate will be in error owing to phosphorescence of the liquid scintillator. Both of these difficulties can be resolved by placing the samples in the freezing unit several hours before they are to be counted, and having the room but dimly illuminated whenever the freezer lid is open.

This counter, as employed by us, has an absolute counting efficiency of 33 percent for fat-soluble tritium-labeled compounds, with a background counting rate of about 600 cpm. In spite of the seemingly high background, the sensitivity is about twice that obtained with the ionization-chamber method. An ionization chamber containing 7.5×10^{-10} curies of tritium will produce, on

our vibrating-reed electrometer, a reading just equal to the average background rate. This same amount of activity, when counted by the liquid scintillation method as described above, will also give a counting rate that approximates the background value. However, activities equal to half the background rate may be accurately counted by the liquid scintillation counting method, but this is not true for the ionization chambers.

When counting tritium-labeled water samples, the scintillation counter is not as efficient as when measuring materials that are soluble in the scintillator. The final sensitivity in this case is about equal to that of the ionization-chamber method.

For counting C^{14}-labeled compounds that are soluble in the scintillator solution, the efficiency of the counter can be varied from 30 percent to nearly 100 percent, depending on the background rate that is most suitable for the level of activity contained in the samples. This liquid-scintillation method is not more efficient than the standard ways of counting C^{14} at equivalent background rates. However, the technique of sample preparation for scintillation counting is much more simple and rapid than those required for the gas or solid counting of C^{14}.

SUMMARY:

Utilizing the liquid-scintillation principle of counting, a relatively simple counter for very weak beta particles has been developed. The counter is stable, accurate, and more sensitive than the ionization chamber-vibrating reed electrometer method of measuring tritium, and, for the same time interval, allows one to count many more samples than with the chamber method.

The main features of the instrument are the use of an efficient liquid-scintillator solution, and a photomultiplier tube that has a very high signal-to-noise ratio, and which is also cooled to further reduce the noise background.

The method is suitable for counting H^3 or C^{14}-labeled compounds that are soluble in the ordinary fat solvents, and which do not color or quench the scintillator solution. If they are first mixed with absolute ethanol, Tritium-labeled water or aqueous solutions of tritium-labeled compounds can also be counted with good efficiency. Samples are prepared for counting by merely dissolving them in or mixing them with the liquid-scintillator solution.

The apparatus required is relatively inexpensive and uncomplicated, and is available commercially.

REFERENCES

1. H. Kallman and M. Furst, Phys. Rev. 79, 857 (1950)
2. H. Kallman and M. Furst, Phys. Rev. 81, 853 (1951)
3. D. Rosenthal and D. Kritchevsky, UCRL. Pub. #1331
4. L. Wouters, UCRL., Personal Communication
5. R. W. Engstrom, Jour. Opt. Soc. Am., 37, 420 (1947)
6. F. N. Hayes, R. D. Hiebert, and R. L. Schuch, Science 116, 140 (1952)
7. H. O. Anger, Nucleonics, 8, 76 (1951)
8. F. N. Hayes and R. G. Gould, Science 117, 480 (1953)
9. M. W. Biggs, D. Kritchevsky and M. R. Kirk, Anal. Chem. 24, 223 (1952)

CAPTIONS FOR ILLUSTRATIONS

1. Drawing showing arrangement of photomultiplier tube, sample vial, sample holder, and preamplifier within the radiation shield.

2. Graph of counting rates obtained with one standard tritiated stearic acid sample as the temperature of the freezing unit containing the counter is varied.

3. Plot of counting rates of C^{14}-and H^{3}-containing samples of equal activity as a function of the voltage applied to the photomultiplier tube. Xylene-terphenyl-diphenylhexatriene scintillator.

4. Plot of the counting rate obtained for a series of tritium-labeled samples prepared by measuring out differing volumes of a standard tritiated stearic solution, and then evaporating the solvent. Xylene-terphenyl-diphenylhexatriene scintillator.

5. Histogram of the distribution of 244 successive counts of one tritiated fatty acid sample. Smooth curve is the normal curve obtained from the data.

6. Curves obtained when one sample (containing 64, 900 dpm H^{3}) and background were counted by four different photomultiplier tubes, at varying tube voltages. Solid line = sample counting rate; dashed line = background rate. Tube #5786W is a Dumont type 6292 tube; the others are Type K1177 tubes.

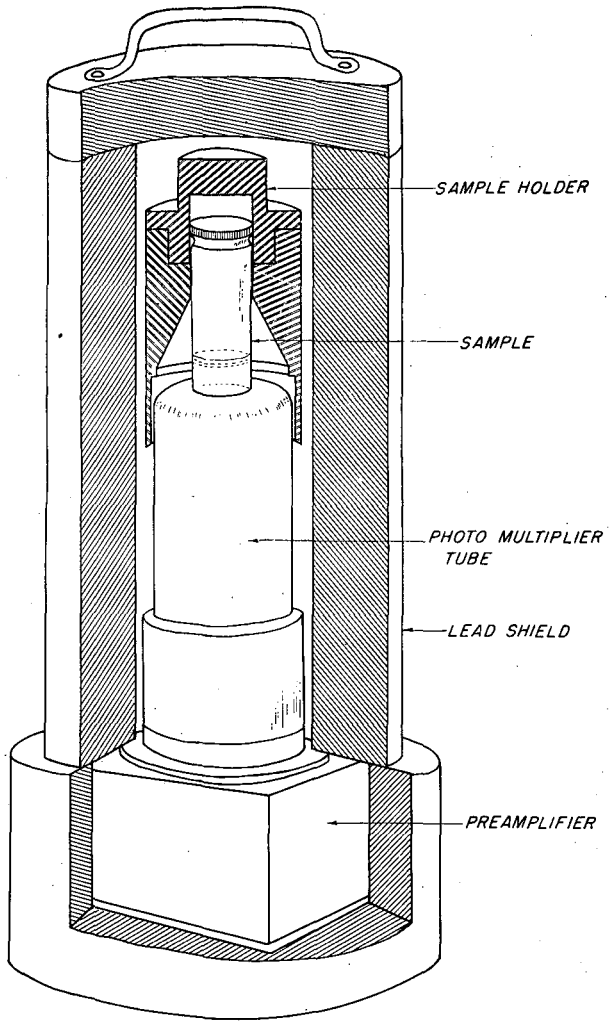
SAMPLE HOLDER
SAMPLE
PHOTO MULTIPLIER TUBE
LEAD SHIELD
PREAMPLIFIER

MU-5611

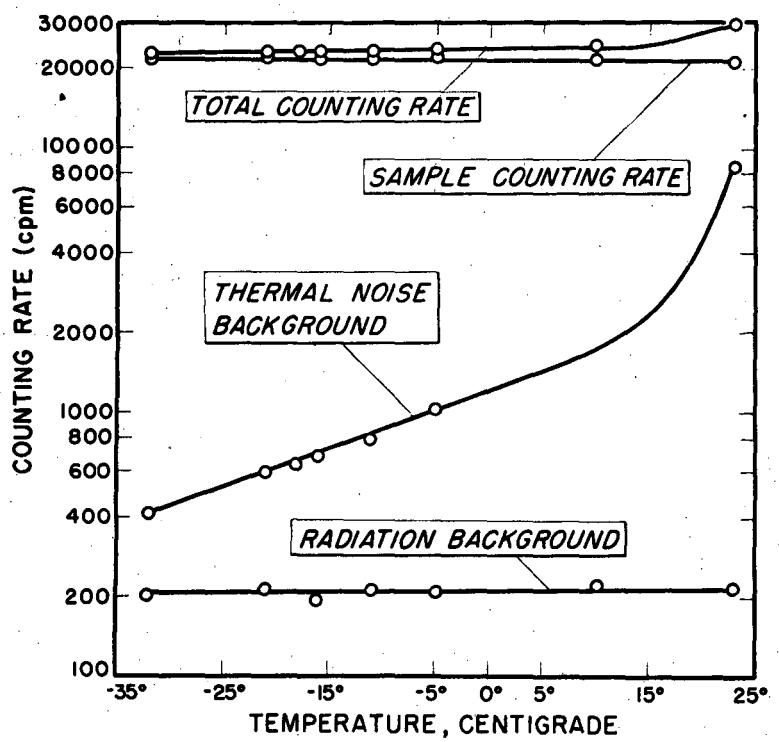
30000
20000
10000
8000
6000
4000
2000
1000
800
600
400
200
100
COUNTING RATE (cpm)
TOTAL COUNTING RATE
SAMPLE COUNTING RATE
THERMAL NOISE BACKGROUND
RADIATION BACKGROUND
-35°
-25°
-15°
-5°
0°
5°
15°
25°
TEMPERATURE, CENTIGRADE

MU-5977

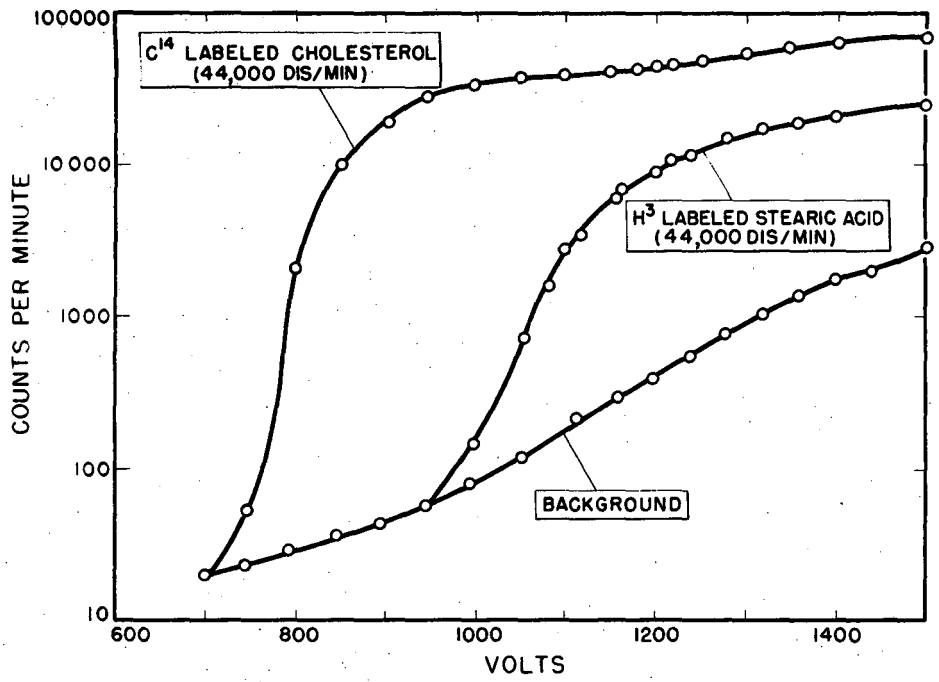
100000
10 000
1000
100
10
COUNTS PER MINUTE
600
800
1000
1200
1400
VOLTS
C14 LABELED CHOLESTEROL
(44,000 DIS/MIN)
H3 LABELED STEARIC ACID
(44,000 DIS/MIN)
BACKGROUND

MU 5610

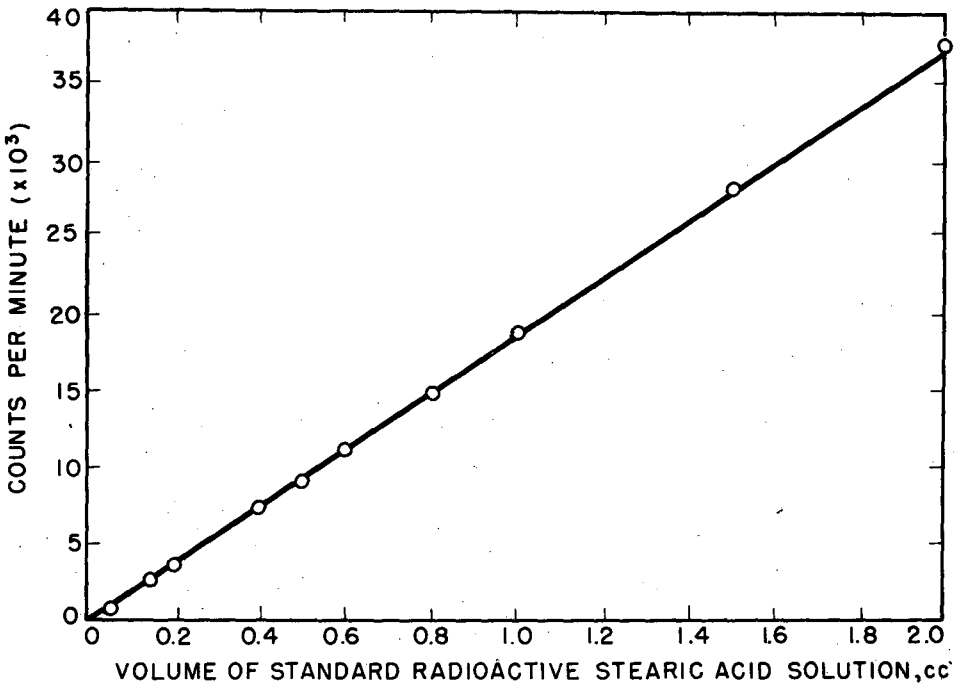
COUNTS PER MINUTE (x10³)
40
35
30
25
20
15
10
5
0
0
0.2
0.4
0.6
0.8
1.0
1.2
1.4
1.6
1.8
2.0
VOLUME OF STANDARD RADIOACTIVE STEARIC ACID SOLUTION, cc

MU-5114

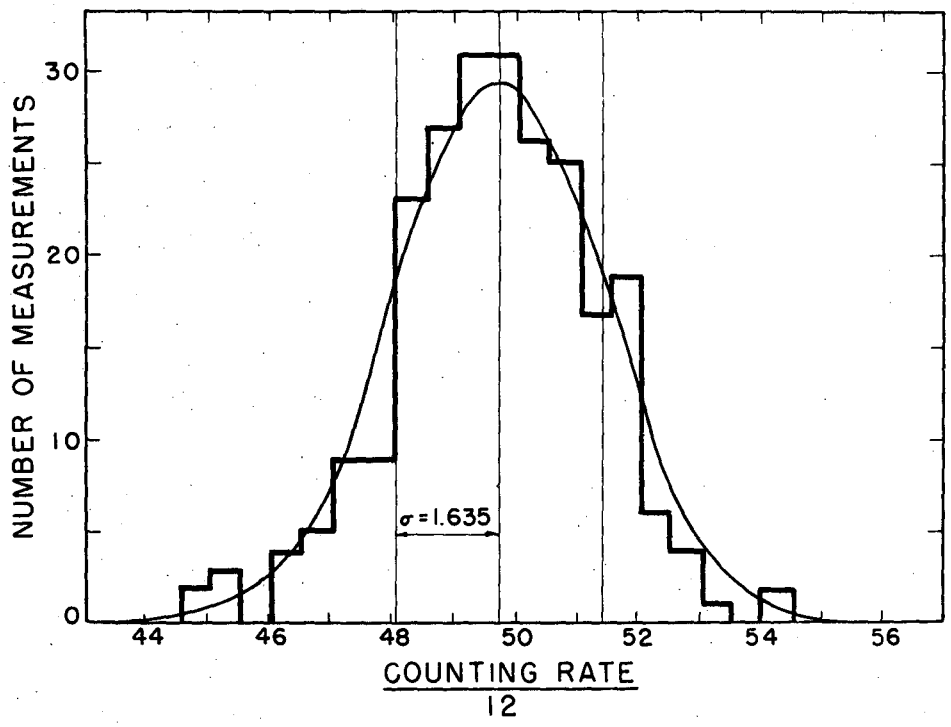
NUMBER OF MEASUREMENTS
30
20
10
0
44
46
48
50
52
54
56
σ = 1.635
COUNTING RATE
12

MU-5113

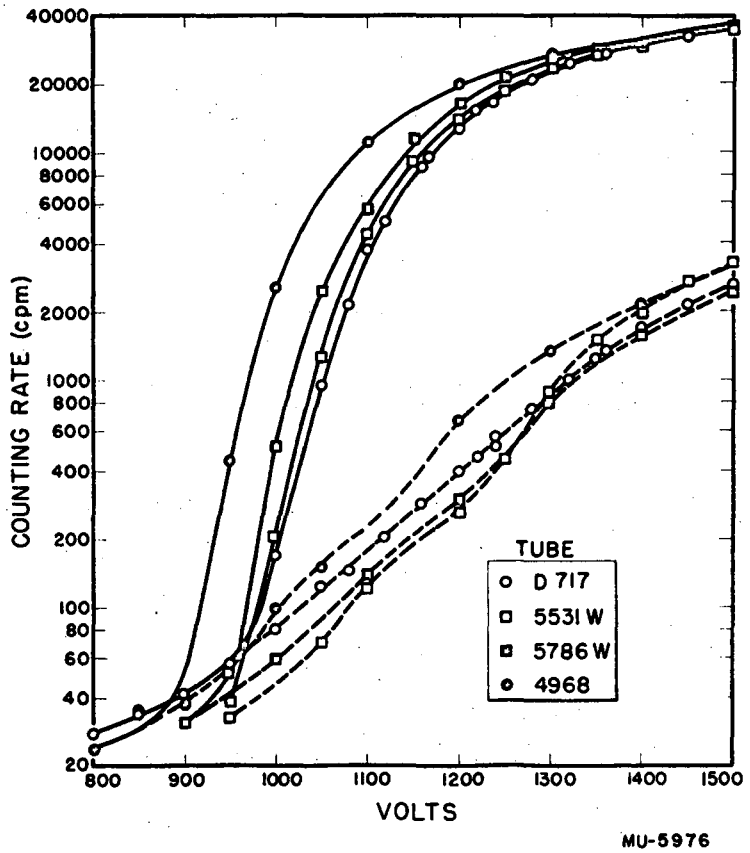
COUNTING RATE (cpm)
40000
20000
10000
8000
6000
4000
2000
1000
800
600
400
200
100
80
60
40
20
800
900
1000
1100
1200
1300
1400
1500
VOLTS
TUBE
D 717
5531 W
5786 W
4968
MU-5976