UCRL-2238 c.2

UNCLASSIFIED

TWO-WEEK LOAN COPY

This is a Library Circulating Copy which may be borrowed for two weeks. For a personal retention copy, call Tech. Info. Division, Ext. 5545

UNIVERSITY OF CALIFORNIA — BERKELEY

RADIATION LABORATORY

mfc - 36319

DISCLAIMER

This document was prepared as an account of work sponsored by the United States Government. While this document is believed to contain correct information, neither the United States Government nor any agency thereof, nor the Regents of the University of California, nor any of their employees, makes any warranty, express or implied, or assumes any legal responsibility for the accuracy, completeness, or usefulness of any information, apparatus, product, or process disclosed, or represents that its use would not infringe privately owned rights. Reference herein to any specific commercial product, process, or service by its trade name, trademark, manufacturer, or otherwise, does not necessarily constitute or imply its endorsement, recommendation, or favoring by the United States Government or any agency thereof, or the Regents of the University of California. The views and opinions of authors expressed herein do not necessarily state or reflect those of the United States Government or any agency thereof or the Regents of the University of California.

UCRL-2238
Unclassified-Instrumentation Distribution

UNIVERSITY OF CALIFORNIA

Radiation Laboratory

Contract No. W-7405-eng-48

MAGNETIC DEFLECTOR FOR THE BEVATRON

Byron T. Wright

June 4, 1953

Berkeley, California

MAGNETIC DEFLECTOR FOR THE BEVATRON

Byron T. Wright*

Radiation Laboratory, Department of Physics,
University of California, Berkeley, California

June 4, 1953

ABSTRACT

A magnetic deflector for the Bevatron is described. Particles initially circulating at some distance from the deflecting field are caused to enter the field during the course of a single turn because of a small energy loss in a suitable placed target. The estimated efficiency is about 1 percent in^{-2} at a detector located twenty feet from the circulating current.

*On leave from the Department of Physics, University of California, Los Angeles, California.

MAGNETIC DEFLECTOR FOR THE BEVATRON

Byron T. Wright*

Radiation Laboratory, Department of Physics,
University of California, Berkeley, California

June 4, 1953

INTRODUCTION

Although it may be some time before any attempt will be made to form an external proton beam from the bevatron[1], a study of this problem was recently undertaken. In part, the object of the study was to determine which changes essential to beam extraction, if any, could better be made to the bevatron during its final assembly rather than at a later time. One of the possibilities for the production of an external beam which was considered in some detail is the magnetic deflector which is described in this report.

In this deflector, the beam, which is circulating in the outermost region of the available "good" ($0.50 < n < 0.78$) magnetic field, is expanded onto a target in which it loses some energy. The amount of loss is such that the amplitude of the resulting rather large radial oscillation carries the beam into the inner region of good magnetic field. The azimuthal position of the energy loss target is such that the first maximum inward excursion of the particle occurs in a straight section. Here the beam passes through a magnet which deflects it outward so that it emerges at the end of the following quadrant. In Fig. 1 the motion of a particle for one revolution at constant radius is represented by a horizontal line. W, N, E, and S refer to the compass locations of the straight sections. The protons are circulating in the shaded region. The beam is expanded into the target T, where it suffers the proper energy loss to cause it to enter the deflecting magnet M, as shown. Here a 2.3° deflection will cause the particle to emerge one quadrant away as shown in Fig. 2.

The basic point is that the particle is caused to enter the full deflecting magnetic field in the course of a single turn, the particle previously having felt a negligible field from the deflecting magnet.

---

*On leave from the Department of Physics, University of California, Los Angeles, California.

DIMENSIONAL DETAILS

The results of magnetic field measurements on one-seventh and one-twelfth scale models are shown in Fig. 3* The dashed curve shows the variation of the magnetic field exponent $n = -(r/H)(dH/dr)$ with radius. These values of n are for a field at the 600 inch radius of 15,600 gauss. The solid curve in Fig. 3 shows how the width of the "good" ($0.50 < n < 0.78$) field is increased by a certain current distribution in the pole face windings. The power required is 1000 kv, about one-eightieth of the kva required in the supply for the main magnetic field. For purposes of estimating the efficiency of the deflecting system being considered, we shall assume that $n = 0.65$ in the radial interval from 590 inches to 610 inches.

The theory of betatrons[2] shows that at full beam energy the radial betatron oscillations in the bevatron will be damped to a maximum amplitude of about three inches, and that the axial betatron amplitude will be an inch or less. So as deflection begins the beam will fill the radial region from 604 inches to 610 inches. The initial equilibrium radius is 607 inches, which corresponds, for the magnetic field present, to 6.197 Bev. After striking the energy loss target the new equilibrium radius is to be 600 inches, which corresponds to 6.168 Bev. Therefore the energy loss in the target T, Figs. 1 and 2 should be 29 Mev. This is accomplished by 16 gm cm^{-2}, i.e. 3.4 inches of Be. Following such a loss the particles will follow the trajectories shown in Figs. 1 and 2, providing the angular deflection in the magnet M is 2.3°. The particle motion from S to W, Fig. 1, where the motion through the fringing field occurs, was found by construction, the radial interval corresponding to one and one-half inches full scale.

EFFICIENCY

In this section we estimate the fraction of the circulating current which reaches unit area of a detector at D, Fig. 2.

---

* These data were taken by Mr. Glen R. Lambertson of the Magnetic Measurements Group.

Assume, (a) that all the particles in the beam pulse strike the target T, Figs. 1 and 2, exactly normal to its face and (b) at a sufficient distance from the edge so that they all traverse the entire thickness.

From some results due to Bethe[4] we find for a 6.2 Bev proton beam traversing 16 gms cm^{-2} of Be that (a) the scattering is well represented by a Gaussian distribution whose half-width at 1/e intensity is 0.07° and that (b) the fraction of all particles which are scattered through an angle less than 0.01° is 2 percent.

Curve P, Figs. 1 and 2, shows the trajectory of a particle unscattered by T. The curves of Fig. 4 show the displacements from P is particles scattered at 0.01° to P, the upper curves for scattering in the axial direction only, the lower curves for radial scattering only. The solid portions of the curves were calculated from formulae for particles moving in the bevatron at $n = 0.65$, and the dashed portions, referring to the motion through the fringing field, determined by numerical integration for the upper and graphical construction of orbits for the lower. Note the strong radial defocussing and axial overfocussing due to the fringing field.

By backward extension of the trajectories represented in Fig. 4 we may determine the location of a virtual source for axial scattering alone or radial scattering alone. By coincidence both occur at a point S, Fig. 2, some 135 inches from the quadrant end. Thus the particles in a cone of half-angle 0.01° from the real source at T, Fig. 2, appear, in the deflected beam, to originate at the virtual source S in a cone of elliptical section whose half-angle in the horizontal plane is 0.33° and whose half-angle in the vertical plane is 0.035°.

The area of the elliptical section at D is about 6 in^2, so the efficiency under assumptions (a) and (b) above would be 1/3 percent in^{-2}. However, a set of quadrapole lens[5] of very reasonable size, aperature and gradient, positioned midway between S and D, Fig. 2, will focus the entire 2 percent of beam within a square inch.

In removing assumptions (a) and (b) we encounter three factors which may reduce the efficiency.

The beam is to be expanded onto the energy loss target by reduction of the magnetic field. At the maximum rate of field reduction which is possible, the equilibrium orbit increases in radius 7×10^{-5} inches per particle revolution.

An estimate has been made of the mean distance from the edge at which particles will strike the target T. Consider a group of particles in a differential azimuthal range and opposite T at a certain instant. All phases of the radial betatron oscillation are assumed to be equally populated. As the motion of this group proceeds under expansion of the orbits, on each turn a small bite of the group's 360° of PHASE is removed by T. As expansion proceeds, the bites increase in size and some of the particles reach greater distances from the edge of the probe. Detailed analysis for n = 0.65, an amplitude of 3 inches for the radial oscillation, and the orbit expansion rate given above shows that beam will be intercepted for 200 turns (corresponding to an interval of 80 microseconds) and that the mean distance from the edge at which particles strike the probe will be 0.002 inches. For a two inch amplitude of radial oscillation the mean distance will be only about 20 percent less.

Since this mean distance is three times the displacement of a particle scattered through 0.01° immediately on entry into the target, we conclude that probably not more than 20 percent of the beam will fail to traverse the full target thickness, and thus fail to lose the proper amount of energy required for entry into the deflecting magnet.

Another result of the analysis of the condition of entry of the beam at the energy loss target, is that in the horizontal plane, the maximum angle between the trajectory and the normal to the face of entry is 0.01°. Since this angle is only one-seventh θ_{rms}, practically no loss in efficiency results from the removal of this part of assumption a.

For an amplitude of one inch for the axial oscillations, the maximum angle between the normal and the particle trajectory reaches 0.07°, a result which leads to some loss in efficiency. To be scattered into the solid angle of interest, some of the particles must be scattered through an angle of 0.07°. Averaging this effect over the range of angles from 0° to 0.07° shows that the actual loss is about 35 percent. The combined effect of removal of assumptions a and b then, is to reduce the efficiencies quoted above by a factor of two.

The energy loss target and the deflecting magnet will both have to move toward the center of the aperture as the acceleration of the beam progresses, since the radial extent of good field decreases as the field increases.

It is possible that the deflecting magnet may need to be pulsed on (say a rise time of 1/2 second) near the end of the acceleration period to avoid magnetic disturbance early in the cycle. Stray field from the deflecting magnet which extends to the region of circulating beam may need to be nullified with auxiliary coils.

CONCLUSION

An efficiency in the neighborhood of 1 percent in^{-2} of detector at a location outside the shielding is possible with the magnetic deflector for the bevatron which is described herein. It is a pleasure to acknowledge a number of helpful discussions with Dr. E. J. Lofgren.

REFERENCES

1. W. M. Brobeck, Rev. Sci. Inst. 19, 545 (1948)

2. D. W. Kerst and R. Serber, Phys. Rev. 60, 53 (1941)

3. W. A. Aron, B. G. Hoffman, and F. C. Williams, Range Energy Curves, UCRL-121, 2nd Revision, 1949.

4. H. A. Bethe, Phys. Rev. 89, 1256 (1953)

5. E. D. Courant, M. S. Livingston and H. S. Snyder, Phys. Rev. 88, 1190 (1952)

FIGURE CAPTIONS

Fig. 1 Motion of a particle for one revolution at constant radius is represented by a horizontal line. W, N, E and S refer to the compass locations of the straight sections. A particle on striking the energy loss target T follows the trajectory P to the deflecting magnet M. If it is deflected through 2.3° it will then follow the path P, Fig. 2. The shaded area represents the region occupied by the circulating beam.

Fig. 2 Section of certain features in the vicinity of the west straight section of the bevatron. B is the concrete shielding wall, Y the magnet yoke, V the vacuum tank, and W the west tangent tank. The line C is at the 600 inch radius. T is the energy loss target. P represents a particle emerging through the fringing field and striking the detector at D. S is the location of the virtual source of particles which form the deflected beam.

Fig. 3 Variation of the magnetic field parameter n with radius at 15,600 gauss. The solid curve shows the improvement due to a certain current distribution in the pole face windings (PFW). Data from one-seventh and one-twelfth scale models.

Fig. 4 Linear displacements from the central trajectory P, Figs. 1 and 2, due to angular deviations of 0.01° at T.

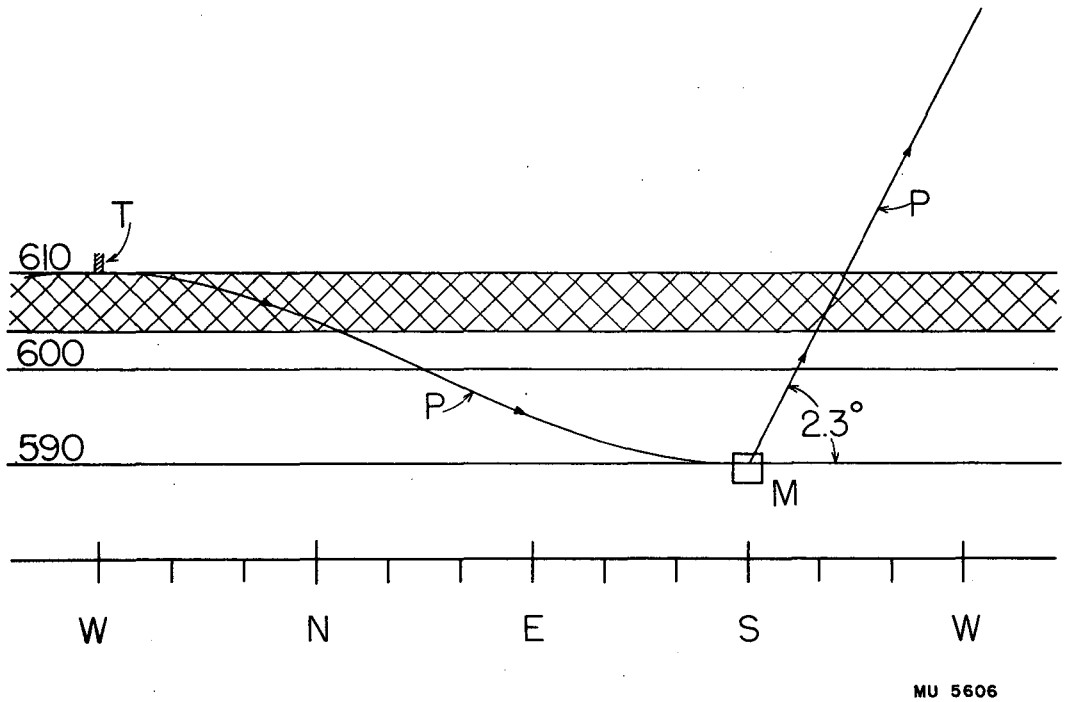

Fig. 1

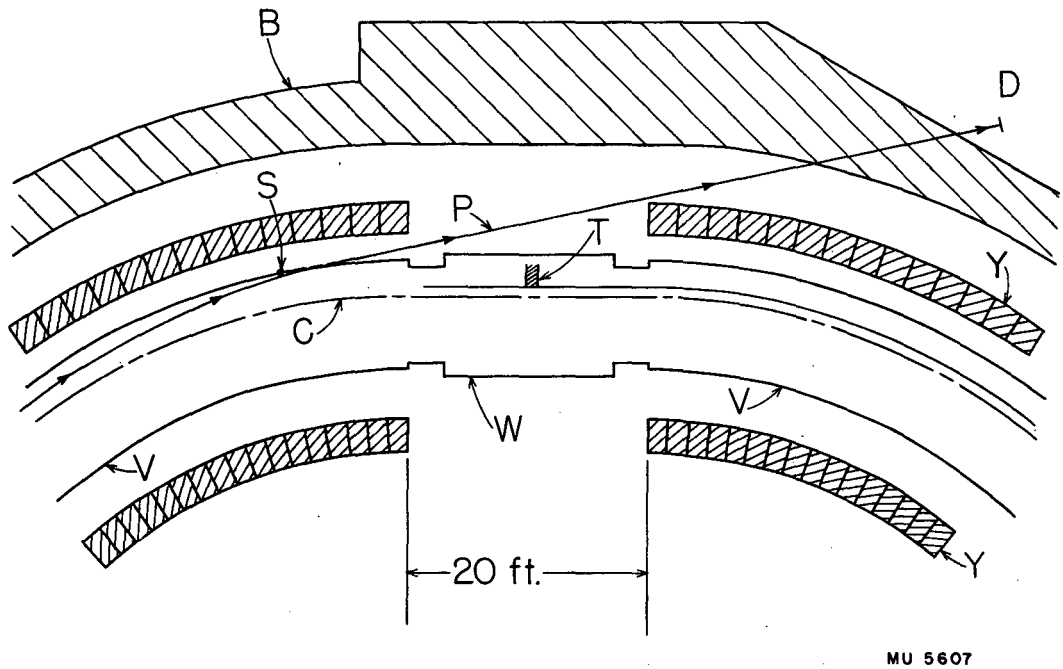

Fig. 2

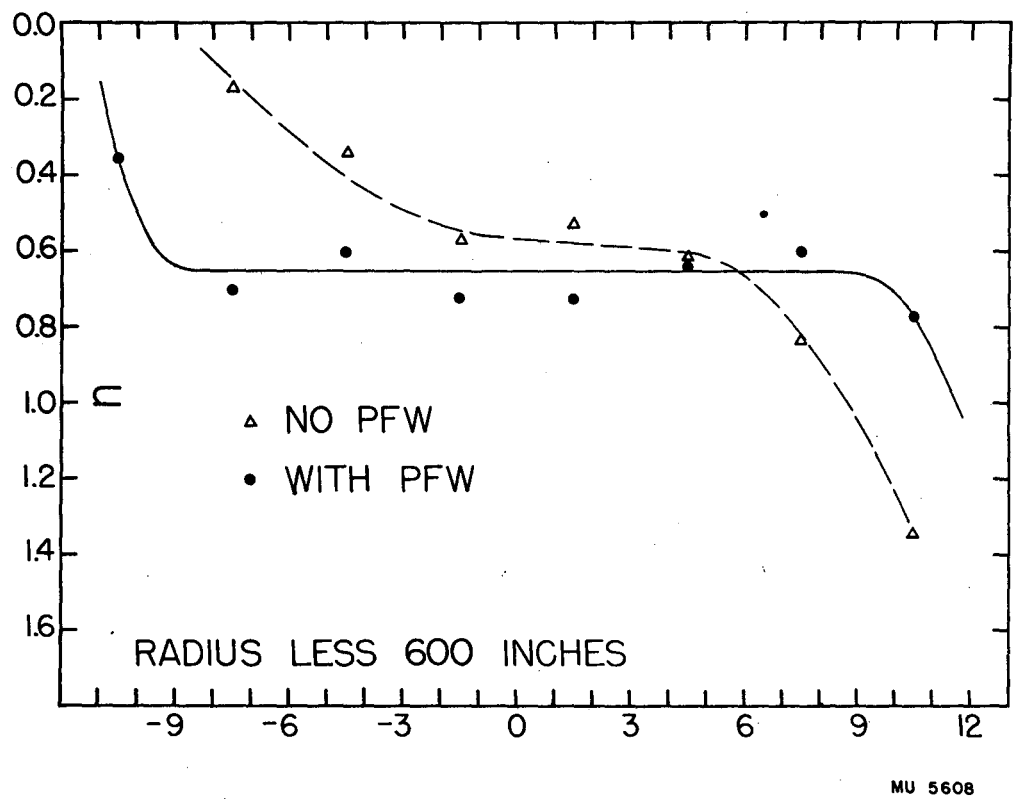
0.0
0.2
0.4
0.6
0.8
1.0
1.2
1.4
1.6
n
NO PFW
WITH PFW
RADIUS LESS 600 INCHES
-9
-6
-3
0
3
6
9
12
MU 5608

Fig. 3

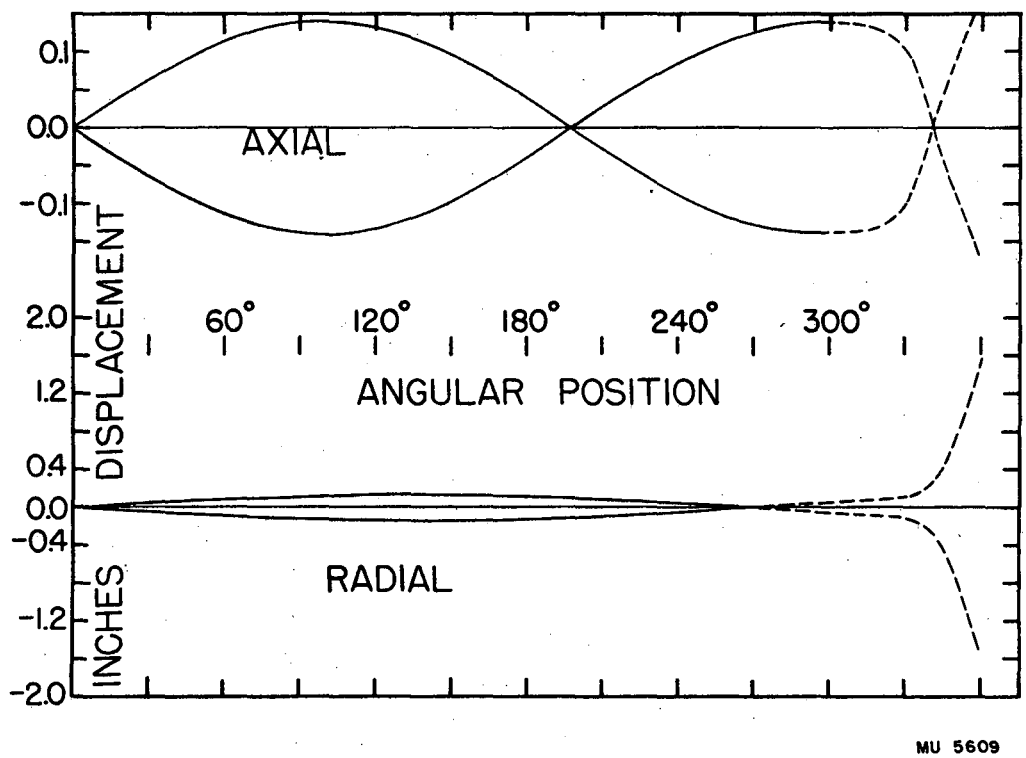
0.1
0.0
-0.1
AXIAL
DISPLACEMENT
2.0
1.2
0.4
0.0
-0.4
-1.2
-2.0
INCHES
60°
120°
180°
240°
300°
ANGULAR POSITION
RADIAL
MU 5609

Fig. 4