UCRL 2241

UNCLASSIFIED

UNIVERSITY OF CALIFORNIA

Radiation Laboratory

TWO-WEEK LOAN COPY

This is a Library Circulating Copy which may be borrowed for two weeks. For a personal retention copy, call Tech. Info. Division, Ext. 5545

BERKELEY, CALIFORNIA

DISCLAIMER

This document was prepared as an account of work sponsored by the United States Government. While this document is believed to contain correct information, neither the United States Government nor any agency thereof, nor the Regents of the University of California, nor any of their employees, makes any warranty, express or implied, or assumes any legal responsibility for the accuracy, completeness, or usefulness of any information, apparatus, product, or process disclosed, or represents that its use would not infringe privately owned rights. Reference herein to any specific commercial product, process, or service by its trade name, trademark, manufacturer, or otherwise, does not necessarily constitute or imply its endorsement, recommendation, or favoring by the United States Government or any agency thereof, or the Regents of the University of California. The views and opinions of authors expressed herein do not necessarily state or reflect those of the United States Government or any agency thereof or the Regents of the University of California.

UCRL-2241
Unclassified-Physics Distribution

UNCLASSIFIED

UNIVERSITY OF CALIFORNIA
Radiation Laboratory
Contract No. W-7405-eng-48

PHYSICS DIVISION QUARTERLY REPORT

February, March, and April, 1953

June 10, 1953

Some of the results reported in this document may be of a preliminary or incomplete nature. It is the request of the Radiation Laboratory that the document not be circulated off the project nor the results quoted without permission.

Berkeley, California

TABLE OF CONTENTS

		Page No.
I.	GENERAL PHYSICS RESEARCH	3
1.	Cloud Chamber Program	3
2.	Film Program	4
3.	High Energy Gamma Ray Spectroscopy	5
4.	Fast Deuterons from 340 Mev Protons on Nuclei	6
5.	The Triton Reaction ($p + d \rightarrow t + \pi^+$)	7
6.	The Detection Efficiency of Three Millimicro-second Counting Equipment	7
7.	The Elastic Photoproduction of Neutral Pions from Deuterium	8
8.	The Photoproduction of Negative Pions from Deuterium	10
9.	Production of Tritons in Deuteron-Deuteron Collisions	16
10.	$P + P \rightarrow D + \pi^+$ Cross Section at 338 Mev, 332 Mev and 324 Mev	17
11.	Resonance Excitation of Delayed Heavy Particle Emitters	17
12.	Time of Flight Neutron Spectroscopy	18
13.	Beta Ray Spectrometer	18
14.	Electron-Neutrino Angular Correlation in Beta Decay	19
15.	Increase in the External Beam of 60-inch Cyclotron Using Strong Focussing	20
16.	Elastic P-D Scattering at 345 Mev	21
17.	Proton-Proton Scattering at 170 and 260 Mev	21
18.	N-p Scattering at Small Proton Angles	22
19.	Excitation Function for $p + C \rightarrow \pi^+$	22
20.	π^+ Spectrum from Proton on Deuterium	22
21.	$n + n \rightarrow \pi^- + D$	22
22.	Spectra of Boil-off Neutrons	23
23.	Yield of Charged Pions at 180° to the Beam by 340 Mev Protons	23
24.	Attenuation of Positive Pions in Hydrogen	23
25.	Synchrotron Studies	23
26.	Theoretical Studies	25
II.	ACCELERATOR OPERATION AND DEVELOPMENT	29
1.	184-inch Cyclotron	29
2.	60-inch Cyclotron	30
3.	Synchrotron	37
4.	Linear Accelerator and Van de Graaff	39
5.	Bevatron	39

* Previous Physics Quarterly Report, UCRL-2152
November, December, 1952 and January, 1953

I. GENERAL PHYSICS RESEARCH

1. Cloud Chamber Program

Wilson M. Powell

270 Mev Neutrons on Helium. W. H. Innes

Data for an investigation of the disintegration of He^4 by 270 Mev neutrons have been obtained in the 22 inch pantograph chamber. Two hundred and eight-three events, representing about one-tenth of the total, have been analyzed. These preliminary results are summarized and compared in Table I with the results of a previous study at 90 Mev.[1]

TABLE I

Reaction	No. of events	270 Mev Percent of Total	90 Mev Percent of Total
${}_1n^o + {}_2He^4 \rightarrow {}_1n^o + {}_2He^4$ (elastic)	121	42.8	51.5
$\rightarrow {}_1H^2 + {}_1H^3$	8	2.8	6.8
$\rightarrow {}_1H^2 + {}_1H^2 + {}_1n^o$	10	3.5	3.7
$\rightarrow {}_1H^1 + {}_1H^3 + {}_1n^o$	61	21.7	22.1
$\rightarrow {}_1H^1 + {}_1H^2 + 2\,{}_1n^o$	39	13.8	7.9
$\rightarrow {}_1H^1 + {}_1H^1 + 3\,{}_1n^o$	7	2.5	0.4
$\rightarrow {}_2He^3 + 2\,{}_1n^o$	37	13.1	8 (est.)

The ratio $\sigma_{inelastic}/\sigma_{total}$ is 0.57 at 270 Mev as compared with the ratio of 0.49 at 90 Mev. The theory of deuteron formation by the pick-up process predicts fewer events of the type ${}_1n^o + {}_2He^4 \rightarrow {}_1H^2 + {}_1H^3$ at the higher energy and the results indicate this energy dependence.

270 Mev Neutrons on Deuterium. M. Knapp

The investigation of negative pi-mesons production by 270 Mev neutrons on deuterium is being continued. Two hundred mesons have been photographed in the ten-atmosphere chamber and more than half the events have been analyzed. The reactions and the number of events observed are:

$${}_1n^o + {}_1H^2 \rightarrow \pi^- + {}_1H^1 + {}_1H^2 \quad \text{(87 events)}$$
$$\rightarrow \pi^- + {}_0n^1 + 2\,{}_1H^1 \quad \text{(29 events)}$$
$$\rightarrow \pi^- + {}_2He^3 \quad \text{(4 events)}$$

---

1. P. Tannenwald, Ph.D. Thesis, 1952, Physics Dept., University of California.

Positive pi-mesons are formed by the process ${}_0n^1 + {}_1H^2 \rightarrow \pi^- + 3\,{}_1n^0$, but since these particles leave tracks which curve in the same direction as the many proton tracks present as background, they are much more difficult to detect and only a few of these events have been found.

32 Mev Protons on Helium. A. F. Wickersham

An investigation of the scattering of 32 Mev protons on helium is being conducted. Careful collimation of the linac beam to counteract the effect of the cloud chamber magnet has made it possible to obtain approximately 600 usable photographs, containing perhaps 3000 events. The events have not been analyzed but the ratio $\sigma_{inelastic}/\sigma_{total}$ appears to be less than 0.2.

35-Atmosphere Diffusion Chamber. P. H. Moulthrop

A high pressure diffusion-type chamber designed for use in the 21,000 gauss cloud chamber magnet has been tested at 29 atmospheres of helium. A sensitive region more than one inch deep has been obtained and modifications in the alcohol vapor supply are being made to extend this region as much as possible. At 29 atmospheres the tracks are extremely sharp and fall very slowly. It appears possible to use the chamber on a six-second cycle by applying a sweeping field for one second and leaving it off the remaining five seconds.

2. Film Program

Walter H. Barkas

Secondary Particles Resulting from High Energy Bombardment. R. W. Deutsch

Continuing a program which has been previously described, thin targets of Be, Al, Ni, Ag, Au, and U have been bombarded by 332 Mev protons and 187 Mev deuterons. The yields of secondary particles, primarily hydrogen and helium isotopes, are compared with those from 375 Mev alpha bombardments. An attempt is made to explain the results by the evaporation theory as formulated by LeCouteur. An angular distribution of secondary particles for the same targets bombarded by 240 Mev alphas has also been determined. In this experiment, secondary particles emitted at 0°, 45°, and 135° to the incident beam direction are observed using nuclear track plates as detectors.

Analysis of High Energy Nuclear Disintegrations. W. H. Barkas

An invited paper was presented on this subject at the April 30 - May 2 meeting of the American Physical Society in Washington, D. C.

Interactions of Fast Electrons and Positrons with Matter. C. E. Violet

From observations of high energy electron and positron tracks in nuclear emulsion, the following processes were studied: (1) electron-electron scattering, (2) positron-electron scattering, (3) the ratio of plateau to minimum grain density for electrons, (4) nuclear scattering of electrons and positrons, (5) positron annihilation in flight, (6) pair production by electrons and positrons, and (7) inelastic electron-electron and positron-electron collisions. Experimental results pertaining to (1), (2), (4), (5), and (6) are consistent with the appropriate theories. The ratio of (3) is found to be 1.087 ± 0.010. Process (7) was not detected.

A complete report, UCRL-2163, has been written on this study.

Relativistic Increase in Ionization. R. Michaelis and C. Violet

Comparison of the grain density of 2.8 Mev and 293 Mev electrons has provided a measurement of the ratio of the saturation grain density (plateau) to minimum grain density. A ratio $g_{pl}/g_{2.8\ Mev} = 1.087 \pm 0.010$ has been found. Assuming the proportionality of grain density with the ionization loss, this ratio is that of saturation to minimum ionization. (This work has been submitted for publication.)

Low Energy Meson Spectra. J. K. Bowker

A study of low energy positive and negative π mesons from a thin carbon target bombarded by protons has been completed. Energy distributions from 0.5 to 10.0 Mev were obtained for two proton energies, 270 and 300 Mev. This work is being prepared for publication.

Other Researches

Additional researches presently being carried out are: Disintegration products from various target elements under high energy proton, deuteron, and alpha bombardment; Meson mass and energetics of meson decay; Photoproduction of charged mesons using the large solid-angle focusing magnet; Gamma-ray energy spectrum from C when bombarded by 160 Mev and 330 Mev bremsstrahlung beam; Gamma-ray energy spectrum from Be under 340 Mev proton bombardment; Measurement of high energy beta ray spectra.

3. High Energy Gamma Ray Spectroscopy

David Cohen, Harlen Shaw and Charles Waddell

A pair spectrometer run was made at the neutron hole of the synchrocyclotron, using various targets with the 340 Mev proton beam. It was found impossible to obtain good data with the beam in the forward direction because of

the very unfavorable ratio of neutrons to gammas entering the spectrometer. Changes are being made in the converter arrangement to cope with this problem.

With the beam in the backward direction the following phenomena were investigated:

1. Data were obtained on the neutral meson spectrum with a carbon target. The peak appeared at about 60 Mev, which is distinctly lower than the Crandall spectra maxima at 180° angle of view.

2. The peak in the 15 Mev region with a carbon target was again seen, although possibly reduced in intensity relative to π^0 photons in comparison with its contribution at 90° angle of view.

3. A very short period of operation with lithium and beryllium targets did not reveal a prominent low energy peak; but the data are insufficient to be sure of its complete absence.

4. Fast Deuterons from 340 Mev Protons on Nuclei

Wilmot Hess and John Wilcox

The yield of deuterons from 340 Mev protons bombarding carbon at 40° to the beam has been measured by using the magnetic particle spectrometer previously described in these reports. The deuterons were separated from protons by momentum and range. Wedge shaped absorbers of 0.3, 0.6, 0.8, 1.2 and 2.0 deuterons ranges thickness were used. The yield of charged particles using these absorbers was essentially flat from 0 to $0.6R_D$. From $0.6R_D$ to $1.2R_D$ the yield dropped 5.8 ± 1.4 percent. From $1.2R_D$ to $2.0R_D$ the yield dropped very slightly. Since no appreciable decrease in yield from 1.2 to $2.0R_D$ is seen the effect of nuclear attenuation of protons in the absorber is small. Tritons and alpha particles would be absorbed in the region 0 to $0.6R_D$. The results would say that the yield of tritons and alpha particles is essentially zero. The drop in yield from 0.6 to $1.2R_D$ must result from deuterons being absorbed. This corresponds to a differential cross section for deuterons of about 4 millibarns per steradian.

The energy spectrum of these deuterons showed a peak at about 60 Mev, was down to zero at 110 Mev and had fallen somewhat at 40 Mev. It is hoped that shortly we can determine the variation of this yield with atomic number. This would help show whether these deuterons could result from a pick-up process.

5. The Triton Reaction ($p + d \rightarrow t + \pi^+$)

Wilson J. Frank, Kenneth C. Bandtel and Richard Madey

The corrections to the angular distribution data for pion absorption, pion decay in flight, and pion and triton multiple scattering have been completed. The efficiency of the coincidence equipment has been measured to be around one hundred percent. The corrected data are tabulated below.

Pion CM Angle	$d\sigma/d\Omega$ (Microbarns/Steradian)
30°	3.95 ± 0.99
50°	2.55 ± 0.18
70°	0.77 ± 0.12
90°	0.44 ± 0.05
130°	0.46 ± 0.07
150°	0.41 ± 0.12

A theoretical analysis by Bludman shows that the flat distribution for pion angles of 90° to 180° is consistent with a hard core model of the nucleon.

6. Detection Efficiency of Three Millimicrosecond Counting Equipment

Richard Madey, K. C. Bandtel, C. S. Godfrey and W. J. Frank

A calibration run was made to measure the efficiency of the fast counting equipment for the detection of protons that lose about 8 Mev in stilbene phosphors. Four stilbene phosphors, each 2.4 gm/cm^2 thick, were placed in the 340 Mev scattered deflected external proton beam of the 184-inch synchrocyclotron. The protons were collimated both fore and aft of the steering magnet. The jaws of the pre-magnet collimator were closed down to give an opening 0.10 inch by 0.10 inch. The 40-inch long brass collimating tube was one-fourth inch in diameter. Photographs were taken to ascertain that the beam passed through the centers of the 3.25 square inch phosphors. The proton beam intensity was reduced to about five protons per second by operating the source at reduced arc voltage, reduced tank filament current, and reduced filament voltage.

Alternate counters were connected in double coincidence through similar pulse shaping circuits. The output of each crystal diode coincidence circuit was fed through a pulse lengthening amplifier and a linear amplifier to a discriminator circuit. The output of each discriminator circuit was recorded on a scaler. In addition, if the discriminator circuit is tripped by the output pulse from a fast coincidence circuit, a shaped pulse of constant amplitude and duration is generated.

These shaped pulses are fed into a slow double coincidence circuit D_3. The efficiency of this slow double coincidence circuit D_3 is assumed to be 100 percent for the detection of these shaped pulses. If ϵ_1 and ϵ_2 are the detection efficiencies of channels one and two respectively, then

$$D_1 = \epsilon_1 N$$
$$D_2 = \epsilon_2 N$$
$$D_3 = \epsilon_1 \epsilon_2 N$$

where D_1 and D_2 are the number of fast double coincidences recorded in channels one and two, D_3 is the number of slow double coincidences, and N is the number of true coincidence counts. We measure D_1, D_2 and D_3 and solve for the three unknowns ϵ_1, ϵ_2 and N.

The results of this calibration run are exhibited in Fig. 1. The absolute detection efficiency for protons losing 8 Mev in each stilbene phosphor is plotted against the length of delay line. The shift of the peak of this resolution function to the right of zero delay line is the effect of the proton time of flight between the counters. The detection efficiency is nearly 100 percent around the peak. The resolving time τ, defined as one-half the full width at half maximum, is just about three millimicroseconds. The resolving time can be shortened at the expense of detection efficiency. The detection efficiency of the quadruple coincidence circuit is the same as that for the double coincidence circuit.

7. The Elastic Photoproduction of Neutral Pions from Deuterium

Dwight Dixon, Richard Madey, Kenneth C. Bandtel and Wilson J. Frank

Measurement of the ratio of the cross section for elastic photoproduction of neutral pions from deuterium ($\gamma + d \rightarrow \pi^o + d$) to that for the inelastic production ($\gamma + d \rightarrow \pi^o + p + n$) would provide a sensitive test of the relative signs of the neutral pion-proton coupling constant and the neutral pion-neutron coupling constant.[1,2] Preliminary reports of work done at Cornell[3,4] indicate that the elastic production has been observed. Deuterons at 30° with respect to the beam were identified by energy and specific ionization methods.

We are attempting to measure the above ratio by using time of flight and to identify the deuteron in the first reaction or the proton in the second. The kinematics have been calculated and a preliminary synchrotron run has been made. Carbon and CD_2 targets were used; the difference gave the contribution

1. W. Heckrotte, UCRL-1868.
2. N. C. Francis, Phys. Rev. 89, 766 (1953).
3. B. Wolfe, et al., Bull. Am. Phys. Soc. 28, No. 3, 22 (1953).
4. A. Silverman, Bull. Am. Phys. Soc. 28, No. 3, 75 (1953).

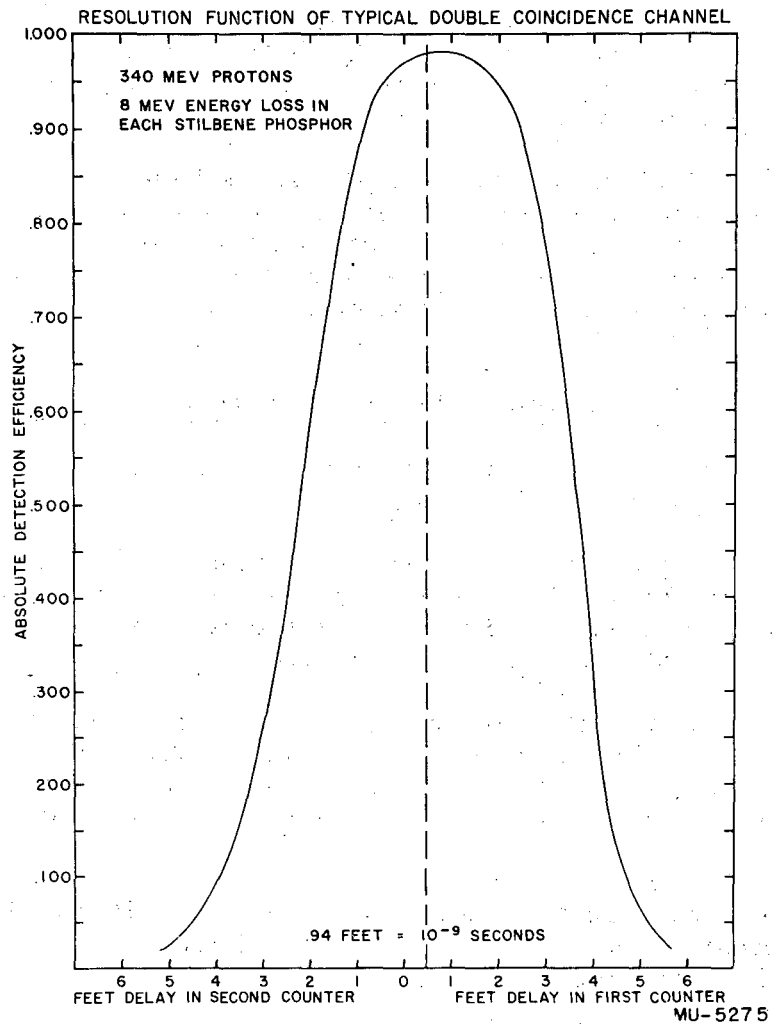
RESOLUTION FUNCTION OF TYPICAL DOUBLE COINCIDENCE CHANNEL
340 MEV PROTONS
8 MEV ENERGY LOSS IN
EACH STILBENE PHOSPHOR
ABSOLUTE DETECTION EFFICIENCY
1.000
.900
.800
.700
.600
.500
.400
.300
.200
.100
.94 FEET = 10^-9 SECONDS
6 5 4 3 2 1 0 1 2 3 4 5 6
FEET DELAY IN SECOND COUNTER
FEET DELAY IN FIRST COUNTER
MU-5275

Figure 1

from deuterium. A liquid scintillation telescope, placed at 130° with respect to the beam, detected one of the photons from the disintegration of the neutral pions. Deuterons (or protons) leaving the target at 20° with respect to the beam passed through a magnetic channel and were detected by a scintillation counter. A coincidence was required between the photon and the deuteron (or proton). Time of flight, together with the BP measurement, served to differentiate between deuterons and protons. To change from one reaction to the other it was only necessary to change the length of a cable in the time of flight apparatus. The statistics accumulated in the first run were insufficient to give a significant ratio.

A liquid deuterium target will be used in future runs. It is expected that the deuterium liquifier will soon be in operation. A special deuterium chamber has been designed to fit between the coil cases of the large pair magnet. Work is now being done on the design of the magnetic channel and the construction of larger and more efficient photon counters.

8. The Photoproduction of Negative Pions from Deuterium

Kenneth C. Bandtel, Wilson J. Frank and Richard Madey

The process $\gamma + d \rightarrow \pi^- + p + p$ has been studied. The γ-rays are produced from the 320 Mev bremsstrahlung of the Berkeley synchrotron. One of the protons was observed at 20° and the negative pion was observed at 120°. A CD_2 - CH_2 subtraction method was used.

The identification of this process has been described previously at Berkeley[1,2] and also at Cornell.[3,4] The Berkeley work consisted of angle and range correlations, coplanarity tests and the absence of a dependence on the beam intensity for the counting rate per unit of integrated beam.

The present work was carried out with three millimicrosecond resolving time and dead time counting equipment. Proton time of flight was used to discriminate against the large electron background. Figure 2 shows the experimental arrangement.

LeLevier[5] has calculated the spectra of negative pions produced by monoenergetic photons on deuterium for pions at 120° and one of the protons at 20°. These recoil angles result when a pion is photoproduced from a free nucleon

---

1. R. Madey, K. Bandtel, and W. J. Frank. Phys. Rev. 85, 771A (1952). "The Photoproduction of Negative Mesons from Deuterium".
2. R. Madey, Ph.D. Thesis. (Unpublished - UCRL-1634). University of Calif.
3. J. Keck and R. Littauer. Phys. Rev. 86, 602A (1952). "Production of Photomesons from Deuterium".
4. J. Keck and R. Littauer. Phys. Rev. 88, 139L (1952). "Production of Photomesons in Deuterium".
5. R. LeLevier. Phys. Rev. 85, 771A (1952). "The Photoproduction of Negative Mesons from Deuterium." Also private communications.

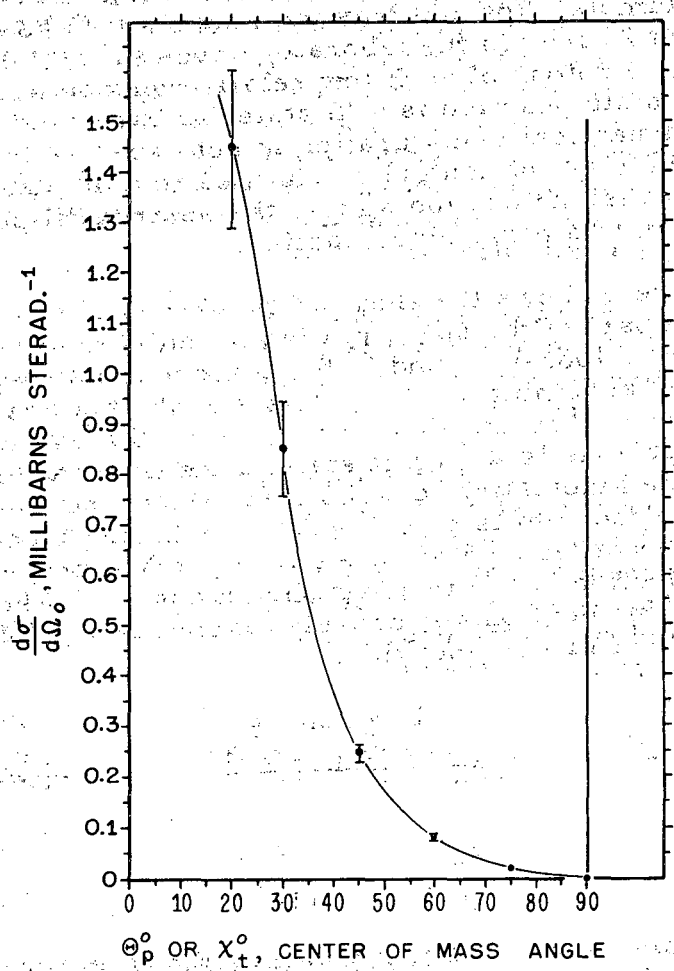

MU-5292

Figure 2

at rest ("free production"); furthermore, the correlated angles remain very nearly the same for photon energies from 240 to 340 Mev. For a given photon energy, energy and momentum conservation laws for this three-body reaction show that the pion energy is a maximum when the two protons have low relative energy. For example, for 280 Mev incident photons both protons may have energies of about 20 Mev in the laboratory even though their relative energy is less than 1 Mev. Protons of such low relative energy would be in an S state. The only final S state possible is a ^1S state for two identical particles. Thus, this particular dynamical configuration is not expected to occur unless the initial triplet spin state of deuterium changes to a singlet spin state of the two final protons; that is, unless the spin of the neutron "flips" over in the act of photoproduction in this particular reaction.

Figure 3 shows the shape of the theoretically predicted pion spectrum. The main part of the spectrum is peaked at the free production energy, since the neutron is loosely bound in the deuteron. The spectrum labeled "no flip" is calculated assuming the final spin state of the two protons is a triplet spin state. The spectrum labeled "flip" is calculated assuming the final spin state of the two protons is a singlet state. The spike at maximum pion energy corresponds to the kinematical condition for which the two final nucleons are in a ^1S state. This spectrum is calculated for an incident photon energy of 280 Mev. The pion energies corresponding to the free production peak and the spin flip spike will be a function of the incident photon energy. The following table shows this variation for incident photon energies from 260 to 320 Mev. The table also shows the correlated proton energies.

Pion Angle = 120°	Pion Energy		Proton Energy	
Proton Angle = 20°	k = 260	k = 320	k = 260	k = 320
Free Production Peak	52	79	65	99
Spin Flip Spike	80	119	20	29

For this range of photon energies the pion energies of the spin flip spikes are higher than the pion energies in the free production peaks. These two ranges of pion energies are separable by means of absorbers. The correlated proton energies form two distinct groups. These two groups are separable by time of flight. Thus, the kinematical condition for which the two final nucleons are in a ^1S state are separated from the free production condition by a combination of pion range and proton time of flight.

Figure 4 combines the kinematics and the geometry of this experiment. The time of flight difference between the proton and the pion is plotted against the pion energy. The abscissa and ordinate are the experimentally determined quantities.

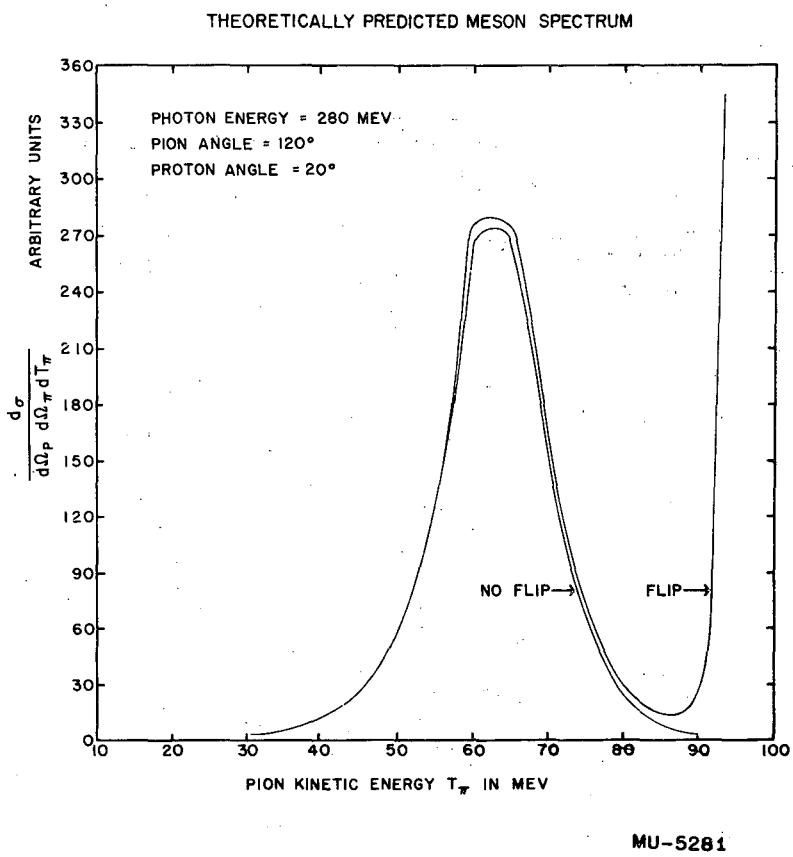
THEORETICALLY PREDICTED MESON SPECTRUM
PHOTON ENERGY = 280 MEV
PION ANGLE = 120°
PROTON ANGLE = 20°
ARBITRARY UNITS
$\frac{d\sigma}{d\Omega_p\, d\Omega_\pi\, dT_\pi}$
NO FLIP→
FLIP→
PION KINETIC ENERGY T_π IN MEV
MU-5281

Figure 3

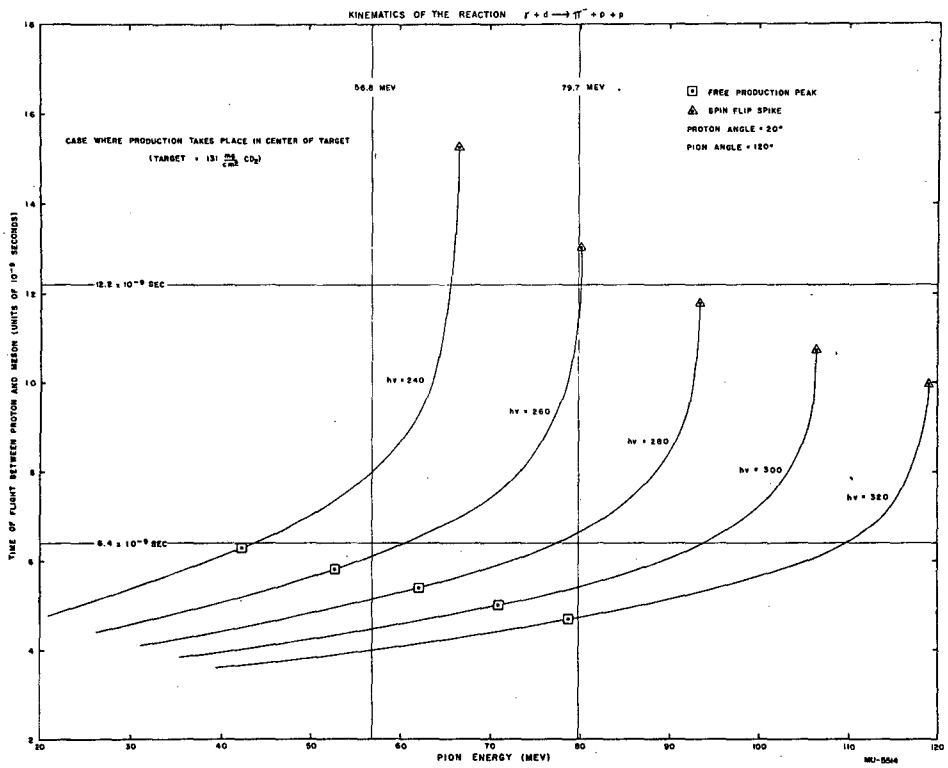
KINEMATICS OF THE REACTION $\gamma + d \longrightarrow \pi^- + p + p$
56.8 MEV
79.7 MEV
FREE PRODUCTION PEAK
SPIN FLIP SPIKE
PROTON ANGLE = 20°
PION ANGLE = 120°
CASE WHERE PRODUCTION TAKES PLACE IN CENTER OF TARGET
(TARGET = 131 mg/cm² CD₂)
12.8 x 10⁻⁹ SEC
6.4 x 10⁻⁹ SEC
hν = 240
hν = 260
hν = 280
hν = 300
hν = 320
TIME OF FLIGHT BETWEEN PROTON AND MESON (UNITS OF 10⁻⁹ SECONDS)
PION ENERGY (MEV)
MU-5514

Figure 4

Lines are drawn on Fig. 4 to indicate the two values of minimum pion energy and the two values of the delay line that were used. Integrated measurements were made. The measurements of pion energy are integral over the range from the minimum values set by the copper absorber to the maximum possible pion energy permitted by the upper limit of the bremsstrahlung spectrum. The measurements are also integral over time of flight because of the finite width of the resolution function of the coincidence circuit. The resolution function of the circuit is fitted with a gaussian function that has a half width at half maximum of 2.2×10^{-9} sec.

Measurement A was made using a delay of 6.4×10^{-9} sec. and a minimum pion threshold of 57 Mev. Measurement B was made using a delay of 6.4×10^{-9} sec. and a minimum pion threshold of 79 Mev. Measurement C was made using a delay of 12.2×10^{-9} sec. and a minimum pion threshold of 79 Mev. Figure 4 shows that Measurement A is designed to measure that region of the pion spectra around the free production peaks for photon energies from 260 Mev to the bremsstrahlung cut-off. Measurement C measures the upper part of the pion spectra for photon energies from 260 Mev to the bremsstrahlung cut-off. Thus, Measurement C is designed to measure principally the ^1S condition for the two final protons. Measurement B provides a check on the theory, since this measurement is practically independent of the final spin state of the two nucleons.

Measurement	Minimum Pion Energy (MEV)	Delay (in 10^{-9} sec.)
A	57	6.4
B	79	6.4
C	79	12.2

The theoretically predicted spectra were folded into the experimental resolution of the equipment and integrated over the bremsstrahlung spectrum to provide a ratio that can be compared with the experiment. The results are as follows.

	Experimentally Measured	Theoretically Predicted F	Theoretically Predicted NF
$\frac{A}{B}$	3.93 ± 0.43	9.2	8.6
$\frac{A}{C}$	57.6 ± 23.0	75	168

Measurement	Counts Per Unit of Integrated Beam
A	0.518 ± 0.034
B	0.132 ± 0.019
C	0.009 ± 0.005

These counting rates are approximately counts per minute. Probable errors are shown. These data were collected in about three weeks of synchrotron running time. About one-half the time was spent collecting data on Measurement C. The statistics on the spike are poor because of the low counting rate (approximately one count per 100 minutes).

Because the ratio of A to B disagrees with theory by a factor of two, the theory cannot be trusted to predict the spin flip feature of the experiment.

9. Production of Tritons in Deuteron-Deuteron Collisions

Charles Godfrey, Kenneth C. Bandtel, Wilson J. Frank and Richard Madey.

A run was conducted to complete the $d + d \rightarrow t + p$ differential cross section measurements. The method of detection and identification has been covered in a previous report. An improvement in geometry was obtained by moving the meson port block of the cave shielding, thus enlarging the useable size of the cave. With this arrangement, it was possible to keep the triton detector at a distance of 11 feet from the target for each angle measured. By allowing this triton detector to define the solid angle, it was possible to keep the multiple scattering corrections in each case to less than 10 percent. At the beginning of the run, curves of coincidence counts against photomultiplier voltage and against scaler bias were obtained. The plateaus obtained were quite flat. Data were obtained at center-of-mass angles ranging from 20° to 90°. Angles smaller than 20° were limited by the background close to the beam. Angles larger than 90° were unnecessary due to the fact that the reaction must be symmetrical about 90°. These data are shown below:

Center of Mass Angle of Either Triton or Proton	$d\sigma/d\Omega_0$ in μ barns/sterad.
20°	1450.0 ± 160.0
30°	851.0 ± 94.0
45°	247.0 ± 16.0
60°	84.3 ± 5.7
75°	21.6 ± 2.2
90°	1.8 ± 0.5

Of special note is the increase by a factor of 1,000 for the two extremes. A preliminary calculation of the total cross section gives a value of 4.0 millibarns.

Dr. Heckrotte and Dr. Bludman of the Theoretical Group have applied the Born approximation to the calculation of this cross section. Two integrals were obtained, one representing a simple stripping process and the

other representing a more complicated interaction. The first integral has been solved and fits the data quite well at forward angles, but drops off too rapidly at wide angles. The second integral has not yet been solved, but should boost the theoretical cross section at wide angles. Thus the experimental results are not incompatible with theoretical calculations.

Preparations are now being made to compare the above cross section with that of the mirror reaction $d + d \rightarrow He^3 + n$ as an argument for or against charge symmetry.

10. $P + P \rightarrow D + \pi^+$ Cross Section at 338 Mev, 332 Mev and 324 Mev

F. S. Crawford, Jr. and M. L. Stevenson

The $p + p \rightarrow d + \pi^+$ differential cross section has been measured by detecting the meson and deuteron in coincidence.

At 338 Mev and 332 Mev, measurements were made at 30°, 60° and 90° in the c.m. The least square fit gives:

$$\frac{d\sigma(\theta)}{d\Omega}_{cm} = 34\,[0.29 \pm 0.08 + \cos^2\theta] \times 10^{-30}\ cm^2\ ster.^{-1} \text{ at 338 Mev,}$$

and

$$\frac{d\sigma(\theta)}{d\Omega}_{cm} = 30\,[0.32 \pm 0.05 + \cos^2\theta] \times 10^{-30}\ cm^2\ ster.^{-1} \text{ at 332 Mev.}$$

At 324 Mev, measurements were made at 90° in the c.m. Using Schulz's (UCRL-1756) excitation function at 0° and the values at 0° for 338 Mev and 332 Mev, the cross section at 0° for 324 Mev is obtained. These data give:

$$\frac{d\sigma(\theta)}{d\Omega}_{cm} = 23\,[0.28 \pm 0.07 + \cos^2\theta] \times 10^{-30}\ cm^2\ ster.^{-1}.$$

11. Resonance Excitation of Delayed Heavy Particle Emitters

S. W. Kitchen and B. V. Hill

Examination of the excitation curve for the delayed heavy particles from Mg^{24} indicated a possible resonance about one Mev above the threshold. New apparatus for more refined measurements has been built, viz. a Ne^{20} counter for integrating the beam and a CH_4 and He counter for calibrating the beam at the target.

The Ne^{20} integrating counter was checked against the Faraday cup for linearity as a function of beam level. An apparent saturation effect was observed. It was found that, with the counter operating well down in the proportional region, the beam pulse produced a signal of the order of 50 volts at the input of the preamplifier. Satisfactory linearity was obtained by grounding the grid of the preamplifier during the beam pulse with a fast relay, using a low impedance counter voltage supply, and by filling the counter with 10 cm of neon and also 4 cm of CO_2. The lifetime of the counter for satisfactory operation at a beam level of 5×10^{-8} amperes average appears to be about 1 hour per cm of CO_2.

12. Time of Flight Neutron Spectroscopy

W. Linlor and B. Ragent

In attempting to measure total cross sections for heavy materials, secondary neutron pulses were found which originated from material in the beam. Although the cause is not definitely known, the probe has been redesigned so as to introduce a minimum of material. An instrumentation run has been completed, which gave a clean, single-pulse beam.

A two day run has been scheduled to measure cross sections with the new probe.

13. Beta Ray Spectrometer

R. Wallace

The machine work on the beta ray spectrometer has been completed and the parts assembled. The vacuum system has been made leak tight after considerable trouble. The counter assembly has been completed and tested for coincidences on beta particles. The first magnet power supply that was tried was found to give electrical interference which was picked up by the counters. A new power supply has now been acquired, but not yet checked. It has been determined with the former power supply that the magnet will run cool enough over long periods of time, so that no forced cooling will be needed. The spectrometer was taken to Bldg. 10, during a Van de Graaff run, and tried in place to check interferences.

A set of six stilbene crystal counters, using 1P21 tubes, has been designed and the machined parts made. The electronic parts are complete and the counters are almost completely assembled. Some stilbene crystals have been cut for these counters, although the shape of crystal needed for these counters is not yet certain.

A counter for use in the linear accelerator scattering chamber for the elastic double scattering experiment has been made but not yet assembled.

14. Electron-Neutrino Angular Correlation in Beta Decay

E. Lauer and M. Good

A recoil ion experiment is in progress to determine which of the five possible relativistically invarient interactions (scalar, vector, axial vector, tensor, pseudo-scalar) between the nucleons and the electron-neutrino fields are important in beta decay. It is planned to study the two monatomic gases He^6 and Ne^{19}. $He^6 \rightarrow Li^6$ is an allowed transition with $\Delta\tau = 1$ and hence can only involve tensor or axial vector interactions. $Ne^{19} \rightarrow F^{19}$ is an allowed transition with $\Delta\tau = 0$ (not $0 \rightarrow 0$) and can involve both Fermi and Gamow-Teller type interactions. The distribution in recoil ion momenta of decays having a fixed (within 10 percent) beta particle energy and corresponding to a range of angles near 180° between the outgoing beta particle and recoil atom will be determined.

Ne^{19} is being studied first because it has proven easy to produce an adequate amount of this activity, and because two other groups have recently reported results for He^6 whereas no results have been reported for Ne^{19}. Ne^{19} is produced by bombarding fine teflon turnings with protons from the linear accelerator, and the active gas diffuses through a tube and into the recoil chamber by molecular flow. The beta particle detector is mounted in one end of the chamber and the recoil ion detector is mounted in the other end. The beta detector is a 2-1/2 inch diameter NaI disc cemented to a lucite light pipe which is in turn coupled to an RCA 5819 photomultiplier tube. The recoil ion detector consists of the magnesium-silver dynode structure which is normally used in the RCA C-7164 photomultiplier tube. The energy of the beta particle is obtained by measuring the time between the scintillation counter pulse and the recoil counter pulse required for the ion to travel a known distance. During runs, the system is closed off from the Hg diffusion pump and gaseous impurities are absorbed by a charcoal trap. This trap holds the pressure in the sealed off system to 10^{-5} mm for periods of weeks, but does not absorb Ne.

All of the apparatus has been constructed. In a preliminary run, 10^{-8} amps of 32 Mev protons incident on the teflon target produced a total beta particle rate in the NaI crystal of about 10^4 counts per second. This is thought to be more than adequate. The electron multiplier tube operation has been checked by counting alpha particles incident at the first dynode and by counting single electrons released from the first dynode by a U. V. lamp.

The system is being prepared for the next run in which a search will be made for delayed coincidences.

15. Increase in the External Beam of 60-inch Cyclotron Using Strong Focussing

Robert E. Ellis, Gerhard Fischer and Franklin Vaughn

In many scattering experiments it is desired to use the cyclotron beam outside the main cyclotron shielding, yet collimated to form a rather narrow beam. In the present experiments, the collimator holes are of the order of 0.13 inch square. In a situation of this type it is natural to expect that a sizable beam increase may be obtained using strong focussing (gradient focussing) magnets.

Such magnets have been successfully employed for this purpose. Good beams of protons, deuterons, or alpha-particles are obtainable. For clarity the discussion here may be given in terms of the actual experience with the proton beam (10 Mev). The external beam of the cyclotron is observed at a point 6 feet from the exit port of the machine to be 2 microamperes, spread over an oval spot of size 1 inch x 1-1/2 inches. Without focussing this spot appears to be about 5 inches in diameter at a point 22 feet from the exit port where the scattering apparatus is located, and gives a current of at most 2×10^{-9} amperes through the 0.13 inch square collimator. When the strong focussing field is applied (located about 8 feet from the exit port) the 5 inch diameter spot is reduced in size under best conditions to an oval spot 1/4 inch x 3/4 inch, and gives a current of 2×10^{-7} amperes through the same collimator. The intensity of the collimated beam has thus been increased by a factor of 100. The same current is obtainable through the collimator using deuteron or alpha-particle beams (when the strong focussing magnets are used).

Two magnet sections are used. Each magnet section consists of four poles giving a magnetic field gradient of about 1000 gauss per inch. This field extends along the evacuated beam tube for a distance of four inches at each magnet section. The apperture of the magnet poles would allow a 2 inch diameter tube to be inserted. The tube actually used is 1-3/4 inches in diameter so that a small amount of freedom of movement is allowed for adjustment.

While the arrangement described has given the encouraging results described, it is not yet in final and reproducible condition. Some trouble is still experienced on some occasions with proper location of the beam, etc. Still, it is quite clear that the strong focussing will be very useful in the near future.

16. Elastic P-D Scattering at 345 Mev

D. Clark

As indicated in previous reports, this measurement is being carried out with the use of a method of identification of the scattered deuterons, in order to separate the elastic from the inelastic effect. The identification is accomplished by photographic recording of pulse heights from a thin and a thick counter; i.e., by specific ionization and total energy. Measurements have been made at all angles that we plan to cover, and the resulting center of mass differential cross sections are shown below. Corrections for attenuation in the absorbers used have not yet been made; these may amount to as much as 20 percent for the larger angles. Systematic errors are probably about 10 percent r.m.s.

Center of mass angle	40°	50°	70°	90°	110°	130°	150°
Center of mass $d\sigma/d\Omega$ in mb/ster.	0.997 ±0.080	0.448 ±0.039	0.0993 ±0.0120	0.0350 ±0.0050	0.0273 ±0.0028	0.0298 ±0.0131	0.0661 ±0.0109

Since some of these measurements are from a single run, we plan to check them in another run in the near future.

17. Proton-Proton Scattering at 170 and 260 Mev

John D. Garrison

The 170 and 260 Mev proton beams are obtained by reduction of the 340 Mev cyclotron proton beam in beryllium absorbers in the cave, after which the beam is magnetically analyzed and collimated in the large pair magnet. Bending is through ~30° in each case. Anti-scattering shields are used to reduce background. The target is a liquid hydrogen target with an associated empty container for subtracting the background. A telescope of two liquid scintillators viewed. A single 5819 photomultiplier is used to count the scattered protons. The beam is monitored by an ion chamber at the exit collimator preceding the liquid hydrogen target. This chamber is calibrated using a Faraday cup. Consideration is given to the low energy cut off of the beam, due to the various materials and counters the proton must penetrate to count, including the hydrogen. This factor is important at the small angles where measurements were made. Results to date are tabulated below. The error is due to counting statistics. The total cross section is less accurately known. Corrections for systematic errors must still be applied. Work is continuing.

170 Mev						
Laboratory angle	5°	8°	11°	15°	20°	30°
C.M. cross section	5.49±0.26	3.88±0.14	3.72±0.11	3.82±0.10	3.63±0.12	3.49±0.11

259 Mev						
Laboratory angle	5°	8°	11°	15°	20°	30°
C.M. cross section	4.63±0.20	4.01±0.12	4.06±0.09	3.73±0.07	3.72±0.07	3.73±0.07

18. N-p Scattering at Small Proton Angles

B. Youtz and R. Kerth

The n-p scattering cross section for small proton angles with good angular resolution ($\sim\pm 1^{\circ}$) has been measured at incident neutron energies of 90 and 300 Mev. For angles larger than 2° the equipment of W. P. Ball (UCRL-1938) was used. For 0° a proportional counter telescope was used with the proper absorber inserted between the last counter and the rest of the telescope. This ensures counting only protons of energy greater than 65 Mev for the low energy and 250 Mev for the high energy.

The results for both energies are not statistically different from either Strauch et al. (Bull. Am. Phys. Soc. 28, 10 (1953)) or from Segrè et al. (Phys. Rev. 79, 96 (1950)). Due to the very large background obtained at 0° and the small effect from the target due to the "good" angular resolution it is apparent that to obtain a decisive result would require a prohibitive amount of cyclotron time. Thus, the problem will probably not be pursued further.

19. Excitation Function for $p + C \rightarrow \pi^+$

D. Hamlin and J. Merritt

Experimental work on the excitation function for positive pions produced at 90° in proton-carbon collisions is still in progress. During two additional cyclotron runs, points were obtained at several meson energies for proton energies in the interval 240-340 Mev. It is expected to complete the meson spectra in future runs.

20. π^+ Spectrum from Proton on Deuterium

D. Hamlin and J. Merritt

The high pressure deuterium gas target is being repaired so that the π^+ spectrum can be obtained for the reaction of 340 Mev proton on deuterium.

21. $n + n \rightarrow \pi^- + D$

J. Peterson

Preliminary calculations have been completed for the angular distribution of π^- mesons in coincidence with deuterons from the bombardment of liquid D_2 by 300 Mev neutrons, and a run is planned when the D_2 condenser has been completed. It is hoped that by this method one can obtain the $n + n \rightarrow \pi^- + D$ distribution as the charge symmetric counterpart of the $p + p \rightarrow \pi^+ + D$ measurement by Crawford and Stevenson.

22. Spectra of Boil-off Neutrons

J. Peterson

Instrumentation for the measurement of the energies of boil-off neutrons from nuclei excited by 30 Mev protons from the linear accelerator is being carried out in cooperation with George Hecht.

23. Yield of Charged Pions at 180° to the Beam by 340 Mev Protons

S. Leonard

Work on this experiment has been completed and is reported in UCRL-2210.

24. Attenuation of Positive Pions in Hydrogen

D. Stork and S. Leonard

Analysis of data in this experiment has not yet been completed except for the measurement at 33 Mev. The total cross section for nuclear scattering at angles larger than ± 35° of 33 ± 4.5 Mev positive pions in hydrogen is $\sigma = 8.8 \pm 2.2$ mb. This 33 Mev measurement is reported in UCRL-2211. Analysis of the data at 44, 56 and 71 Mev is being completed.

25. Synchrotron Studies

A. C. Helmholz

During the months of February, March, and April, the synchrotron operated well. Several long runs were made at good beam strengths. There were a few times when there was not much demand for machine time, and during these times some work on calibration was done. An ion chamber of the Cornell type is being constructed and will be used in the calibration. It seems quite certain that the attempt to measure the x-ray beam before collimation has been unsuccessful and that it will probably be necessary either to measure the intensity behind the experimental set-ups or to measure it with a thin chamber between the collimator and the experimental apparatus.

R. Madey, W. Frank, and K. Bandtel made a run to investigate the process $\gamma + D \rightarrow \pi^0 + D$. They attempted to measure this by taking the difference in counting rate between carbon and deuterated paraffin. Because of the small

energy of the recoiling deuteron, their counters were at small angles to the γ-ray beam. This caused a large background so that the results were not statistically significant. A liquid deuterium target is now under construction and the experiment will be done when this is completed and some improved electronics are available.

R. Sagane and W. Dudziak have made two long runs with the spiral orbit spectrometer to measure the yield of low energy π-mesons produced by γ-rays on hydrogen. By utilizing both directions of entrance of the mesons into their photographic emulsions, they will also obtain the distribution of π^- mesons from carbon as well as the π^+ mesons from carbon and hydrogen. Several energies between 15 and 45 Mev are being investigated.

R. W. Kenney has started an experiment to measure the difference between the total absorption cross section of beryllium and the pair production cross section. In order to improve the accuracy which he had obtained in previous work, a vacuum chamber has been constructed for the pair spectrometer. Preliminary tests of the vacuum chamber have been made and the operation is quite satisfactory. Its use renders negligible the background of pairs coming mainly from the air column in the path of the beam. This vacuum chamber, along with the pair spectrometer, will also be used by R. Post and C. MacDonald to do an experiment on the cross section for pair production in the field of the electron. They have made several preliminary runs indicating the need for such a vacuum chamber.

E. Segrè and C. Wiegand have made a preliminary run to measure the fission cross section for gamma rays. In this connection some work with the machine has indicated that a lengthened pulse of x-rays can be obtained at energies as low as 160 Mev by the usual techniques. At this low energy the length of the pulse is only of the order of 100 μ sec but this may still be long enough to be useful for counting work.

H. Heckman has exposed several nuclear emulsions to γ-rays scattered from the synchrotron beam by carbon. By measuring the scattering along the tracks of pairs, he can estimate the energy of the γ-ray producing the pair. So far he has found no γ-rays in the 20-30 Mev region that might be scattered from the resonance observed in (γ, n) work. N. Lewis and F. Coensgen have also searched for some evidence of these γ-rays with a NaI counter but without success.

26. Theoretical Studies

David L. Judd

Meson Production in the Reaction $P + P \rightarrow \pi^+ + D$. S. Bludman

The spectra of mesons produced at 90° and 0° by 340 Mev protons on a complex nucleus has been calculated from the cross section for $p + p \rightarrow \pi^+ + d$ with a Gaussian momentum distribution for the struck protons. Certain ambiguities concerning the impulse approximation in nucleon-nucleus meson production, as well as the effects of nuclear opacity to incident protons and absorption of mesons, have not yet been considered. These effects are expected to reduce the number of mesons produced and their energy.

Meson-Nucleon Scattering. S. Gasiorowicz

The general phenomenological treatment of meson-nucleon scattering initiated in the last quarter has been carried out. A proper choice of parameters, viz. two coupling constants for the states treated by perturbation theory, and two parameters (resonance energy and width) for the state of isotopic spin and total angular momentum 3/2, enables one to fit the most recent scattering data quite adequately. However, subsequent investigation throws doubt upon the use of a resonance formalism, in particular upon the use of a single-level formula, and this tends to weaken the case for an already weak model. Consequently it was not felt worth-while to extend the use of this model to photoproduction calculations.

Meson Production in the Reaction $N + D \rightarrow \pi^+ + P + D$. B. Macdonald and R. Stuart

The angular distribution for the reaction $n + d \rightarrow \pi^- + p + d$ is being calculated, phenomenologically, assuming charge symmetry.

Meson-Nucleon Interaction in the Reaction $P + P \rightarrow \pi^+ + N + P$. S. Tamor

The effect of the meson-nucleon interaction on the final state in the reaction $p + p \rightarrow \pi^+ + n + p$ has been investigated. Near threshold one would expect a modification of the energy distributions when the meson and one of the nucleons come off together. Assuming the particles to be emitted into an S state the effect is describable in terms of a meson-nucleon reciprocal scattering length, a. The meson spectrum is found to be very insensitive to a except for the case of an almost exact resonance at zero energy. The proton spectrum is, however, quite sensitive to a for attractive interactions. The effect has been calculated for a proton energy of 342 Mev. This may provide an indirect method of investigating the π^- nucleon scattering at very low energies.

The Theory of Particles of Half Integral Spin. J. V. Lepore

A study of the theory of particles of half integral spin is being made in an attempt to construct a relativistic description of heavy particles (nucleons) which does not involve the negative proton.

A Study of the Relativistic Bound State Formalism. M. Neuman

In order to get a better insight into the nature of the relativistic bound state formalism the solutions of a related equation were examined. In it only two dimensions appeared, a spatial and a temporal, thus preserving the essential hyperbolic features of the physical space time. Using various simplified interactions between particles it was found that besides the solutions that appear in the equation after the non-relativistic reduction there are others which have no counterpart in the latter. It thus appears that the boundary conditions imposed on this equation are incomplete. Moreover in the absence of well defined integrals of motion, the interpretation of the frequency appearing in the Fourier analysis of the wave function with respect to the mean of the times of the two particles as proportional to the energy seems to be somewhat doubtful in the completely covariant scheme even though it leads to sensible results in the reduced equation. This aspect of the problem is being currently investigated.

Radiative Corrections to Meson Scattering. S. Tamor

The investigation of the radiative corrections to the meson-nucleon scattering in the radiation damping theory continues.

The Meson-Nucleon Equation in the Adiabatic Limit. R. Arnowitt

Work on the meson-nucleon equation in the adiabatic limit is continuing. The equation has been returned (approximately) to co-ordinate space for the isotopic 3/2 interaction. Replacing the Yukawa functions by "equivalent" square wells it is found that the small components of the equation are not negligible. Eliminating them rigorously a single equation for the large component was obtained. This equation was applied to calculating the lifetime of the V_1^o particle, assuming that it is a virtual state of a $p - \pi^-$ system at an energy ~40 Mev. If one assumes that the V_1^o is in a state of $j = 11/2$ ($\ell = 5$) a lifetime of $\tau \sim 2 \times 10^{-10}$ sec. is obtained with a $g^2/4\pi \approx 13.5$ (the long lifetime being due to the large centrifugal barrier). At this g^2 no other virtual angular momentum states appear for $Q \sim 40$ Mev and no bound states occur at least at the low ℓ values. The equation is now being applied to calculation of the low energy $p - \pi^+$ scattering.

The Tomonaga Intermediate Couping Formalism. B. Fried and R. J. Riddell

The detailed study of the Tomonaga intermediate coupling formalism continues. It has been found necessary to use a computing machine to find the excited states of the charged pseudoscalar meson field and these calculations are now being carried out on the IBM Card Programmed Calculator

at UCRL, Livermore. The same machine is also being used for the charged scalar field allowing different wave functions for the positive and negative mesons. A consistent method of treating meson scattering in the Tomonaga approximation has been developed, based upon the Hulthen variational principle adapted to field theory. The choice of trial functions is such as to include the effect of excited states on the scattering. The solutions of the scattering problem can be written in a simple closed form by using a new relation which gives the bound meson wave functions for the ground state or excited states in terms of the corresponding state vector.

High Energy Compton Scattering. R. Huddlestone

Work on high energy Compton scattering on nucleons has been completed, using a classical model of an extended nucleon source coupled to a pseudoscalar meson field. The symmetric theory gives rise to a resonance behavior in the cross section at $E_\gamma \sim 2\mu$ for $F^2/4\pi = 0.3$ and $0.3 < a\mu < 0.5$. The peak in the angular distribution moves from the forward to the backward direction as E_γ increases through the resonance energy. The effects of a neutral meson field plus Pauli moment have also been investigated.

The High Energy Reaction $P + T \rightarrow D + D$. S. Bludman and W. Heckrotte

The high energy reaction $p + t \rightarrow d + d$ is being studied in the impulse approximation. The cross section has been expressed in terms of a simple pick-up reaction plus more complicated scattering processes. The matrix elements for the pick-up part, which apparently predominate, have been evaluated from the approximately known wave functions for these light nuclei. The remaining terms are being studied, and when calculated should give information on the importance of processes neglected in the conventional pick-up picture.

Inelastic Scattering of Medium Energy Protons. W. Heckrotte

The inelastic scattering of medium energy protons by nuclei has been reexamined in an attempt to improve previous calculations, which correlated the angular distribution with the change in the angular momentum between the initial and final nucleon states. The agreement with experiment is still unsatisfactory.

Phase Variations in a Two Dee Cyclotron. D. L. Judd and S. Bludman

The phase variations of particles in a cyclotron operated with two 90° dees driven in phase have been studied in connection with projected modifications of the 60-inch cyclotron. The proposed use of an approximately square rf wave form is equivalent to an increase of $\pi/2$ in dee voltage.

The Bremsstrahlung Spectrum at High Energy. S. Tamor

A calculation of the bremsstrahlung spectrum from electrons of 300-500 Mev including target thickness corrections is in progress.

The Theory of the Fine Structure of the Synchrotron Beam. Lloyd Smith

The theory of the fine structure of the synchrotron beam measured by Madey, et al. has been reexamined. The spreading in phase as the electrons spiral toward the target is considerably less than originally thought, and the measured fine structure should give an accurate picture of the bunch just before the rf is turned off.

Miscellaneous

As is customary, an important fraction of the time of the theoretical physics group has been spent in discussion and consultation with experimental physicists and others on a variety of problems covering the general range of activities at this laboratory.

II. ACCELERATOR OPERATION AND DEVELOPMENT

1. 184-inch Cyclotron

Operation. J. Vale

The only thing of importance to report for this period is the operation time of the cyclotron. This constituted an average of about 96.5 percent of the time that the crew was on duty.

Modification of the Cyclotron. Marvin Martin

Magnetic model measurements indicate that it will be possible to attain a central field in the rebuilt 184-inch magnet of 23 kilogauss with a linear radial decrease of 5 percent to 83 inches radius using only the existing generators for magnet excitation. An additional magnet coil will be used located as near the gap as possible.

This field will result in a proton energy of 730 Mev, a deuteron energy of 456 Mev, a He^3 particle energy of 1140 Mev, and an α energy of 900 Mev. A total frequency range of 13.4 to 35.2 megacycles/sec. will be required.

The design of the new magnet coil is complete and bids on its fabrication are due this month. Steel and copper for the coil are on order and orders for insulation will be placed this month.

An intensive program is under way to measure on the magnetic model the forces on the coils and poles of the revised magnet. These forces have proved to be difficult to predict due to the presence of two sets of coils with separate generators, and it is necessary to investigate all combinations of current in each coil. The high degree of saturation in the iron also makes calculation of forces extremely difficult.

A resonator design (dee, liner, and variable capacitor) has been completed and a one half scale model is being built to verify the calculations, to determine the extent to which harmonics and parasitic modes may require redesign and to permit study of the best means of coupling power from the oscillator into the resonator.

A design of vibrating blades which will provide a capacity variation adequate to cover the frequency range required for each type of particle is complete. The blades are tapered cantilever beams, 32 inches long, magnetically driven at their natural frequency, 60 cycles/sec. To match the frequency requirements of different particles, a manually operated change in inductance and fixed capacity is provided. The total amplitude at the tips of the blades is 2 inches. The blades are made of nitrided nitralloy No. 130 to give the maximum available resistance to fatigue failure. The maximum bending stress is approximately 20,000 psi which is safely below the published fatigue limit for this material.

Current development is being directed toward improving the efficiency with which power can be coupled into the vibrating blades.

Studies are under way of methods of deflecting the accelerated particles out of the cyclotron. The increased particle energy makes this problem more difficult than at present and it appears that a new method will be required. Currently under investigation are combinations of scattering deflectors, pulsed magnetic channels, and variations of the "regenerative peeler" proposed by J. Tuck.

Other studies are being conducted of revisions to shielding and experimental facilities to permit the higher energy particles and the secondary particles which they will produce to be utilized to best advantage.

2. 60-inch Cyclotron

Operation. William B. Jones

The operation of the 60-inch Cyclotron during this quarterly period was as follows:

Alpha bombardment	299.1 hrs.
Deuteron bombardment	197.4 hrs.
Proton bombardment	153.0 hrs.
Carbon bombardment	180.2 hrs.
Development and experiment	144.7 hrs.
TOTAL BOMBARDMENT	974.4 hrs.
Outage time	217.8 hrs.
TOTAL	1192.2 hrs.
Shutdown time	942.8 hrs.
TOTAL	2135.0 hrs.
Daylight Saving Time change	1.0 hrs.
TOTAL TIME	2136.0 hrs.

Operating efficiency was 81.7 percent.

In order to perform some physical measurements, it is necessary to bring the cyclotron beam entirely out of the magnetic field. At Crocker Laboratory this is done by shielding the beam from the magnetic field. (See UCRL-1827.) Figure 1 shows the shielding arrangement with respect to the emerging beam.

The collimating slits are placed in the main vacuum tank and are located midway between the deflector and the entrance to the target snout plate. These slits are adjustable and may be opened to admit the entire beam. Operation indicates that a 1/4 in. slit opening will give the maximum beam and largest target-to-snout ratio. Further collimation may be made at the end of the iron snout preceding the extension tube when only small diameter and low-intensity beams are desired. This also reduces the background radiation level outside the water shielding.

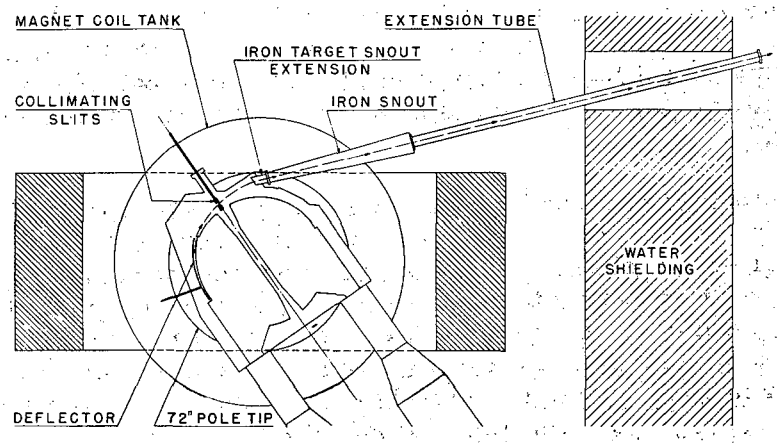
MAGNET COIL TANK
EXTENSION TUBE
IRON TARGET SNOUT EXTENSION
COLLIMATING SLITS
IRON SNOUT
WATER SHIELDING
DEFLECTOR
72" POLE TIP

Figure 1

Beam levels of two microamperes over 1-1/2 inch diameter have been obtained with alphas, protons and deuterons at the end of the extension snout, with less than 10 percent of the beam being recorded on the intermediate equipment. When magnetic strong focusing* was used on the snouted beam, the target beam level was raised to 2.6 microamperes over an area of approximately 0.5 square centimeter. Further collimation of the beam at the target end of the extension tube resulted in a beam of 0.2 microamperes through a 1/8 inch diameter collimating hole. Thus, the beam appears to be fairly evenly distributed, with an average density of five microamperes per square centimeter. Energy determinations through the absorption of aluminum were made and it was found that the mean proton energy was 10.2 Mev and the alpha particle mean energy was 41.3 Mev. The total energy spread due to straggling and beam energy variation was approximately five percent. Straggling undoubtedly accounts for most of this spread so the beam energy variations are very small (approximately one percent).

Removable Target Chamber and Centerline (Axial) Probe Chamber. Charles A. Corum

The new target chamber in use on the 60-inch Cyclotron is quite similar to the old unit that had been in service since 1945. No basic change in design or geometry could be adopted at this time because of the necessity for using existing equipment, however, some improvements were made that have long been desired.

The old target chamber was welded to a plate covering the entire port of the vacuum tank target area. A new plate was mounted on the tank so that the target and probe chambers could be mounted separately. The reduction in overall size of the target chamber (i.e., not being part of the port plate) makes it possible to have a spare chamber on hand for replacement should the activity become too great or should some active material contaminate the chamber. The area is now more adaptable for experimental use of new target designs, et cetera, as such become advisable.

The target mounting plate, or snout plate, associated with the target chamber, has the feature of quick mounting and removal. This is done very easily and quickly by the use of two slots at one end of the plate that slide under insulated screws. A single slot at the other end allows the use of an insulated swivel screw. This gives three points of pressure for the gasket seal. The removal of the plate by loosening the screws, rather than having to remove them as was formerly required, has speeded up the interchange of plates used for various target setups. This also permits greater freedom for future design of equipment and lessens the radiation dose received by the operator performing the change.

* The beam energy determinations and strong focusing work was done by G. Fischer, R. Ellis and F. Vaughn.

Along with the removable target chamber, a new centerline (axial) probe chamber and vacuum lock were installed. These units replaced the ones designed and fabricated by A. Ghiorso and C. Gordon (UCRL-1380, p. 19). Principal improvements on the new chamber include:

1. An available opening to the vacuum tank, 9-1/2 in. high x 5-1/2 in. wide. The former opening was 3-3/4 in. in diameter.

2. A simpler gate mechanism operating on the same principle as that used on the ion source lock (UCRL-1729, p. 39).

3. The chamber may be removed and a window plate substituted for viewing. The viewing port, 6-1/4 in. in diameter, gives a large viewing angle of the vacuum tank along the axis between the dees and includes a view of the deflector.

4. The chamber (9-1/2 in. x 5-1/2 in. x 6 in.) gives ample room for various sizes of probes, targets, etc., that may be required to operate in this area.

5. The face plate for the probe chamber has been adapted so that all existing equipment may be used.

6. As with the snout plate of the target chamber, the probe chamber, the window plate replacing it, and the probe seal plates are mounted in position so that they may be easily and quickly removed.

7. The vacuum line for the probe chamber and vacuum lock were realigned during installation. The vacuum and exhaust valves were mounted side by side overhead close to the upper coil tanks, thus providing greater working space.

The entire assembly is shown in Fig. 2.

Removable Feelers. G. Bernard Rossi

Reference was made in UCRL-2054, p. 22, to the use of cross dee feelers on the 60-inch cyclotron. It was also stated that, although performances with molecular protons, deuterons and alphas were greatly improved, a sharp beam decline was noted when carbon^6 was accelerated. To take advantage of this improved performance with the pole feeler and yet not diminish the carbon^6 would make for maximum flexibility of the machine. To accomplish this, a

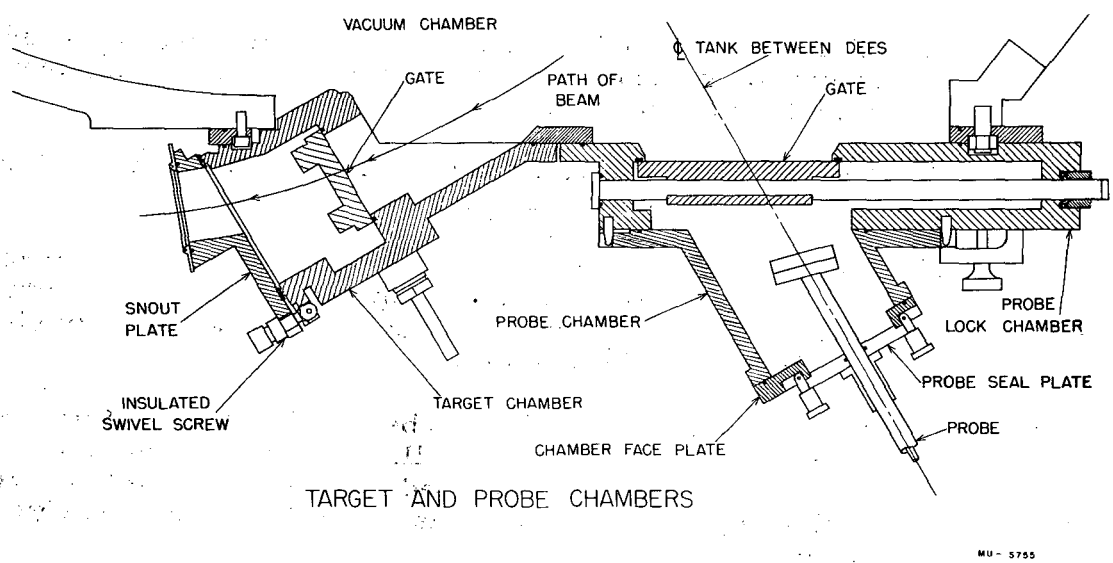

TARGET AND PROBE CHAMBERS

Figure 2

clamp was designed that could be inserted through the probe vacuum chamber. With this probe, it is now possible to place a single-pole cross-dee-feeler on the existing horizontal feelers, without disturbing the tank vacuum. This method of feeler introduction permits studying the results of various feeler shapes with respect to beam shape, both internal and external to the dees.

At present the cross-dee-feeler being used is a carbon bar, 3/8 in. x 5/16 inch. Figure 3 illustrates how this insert is held to the present feelers.

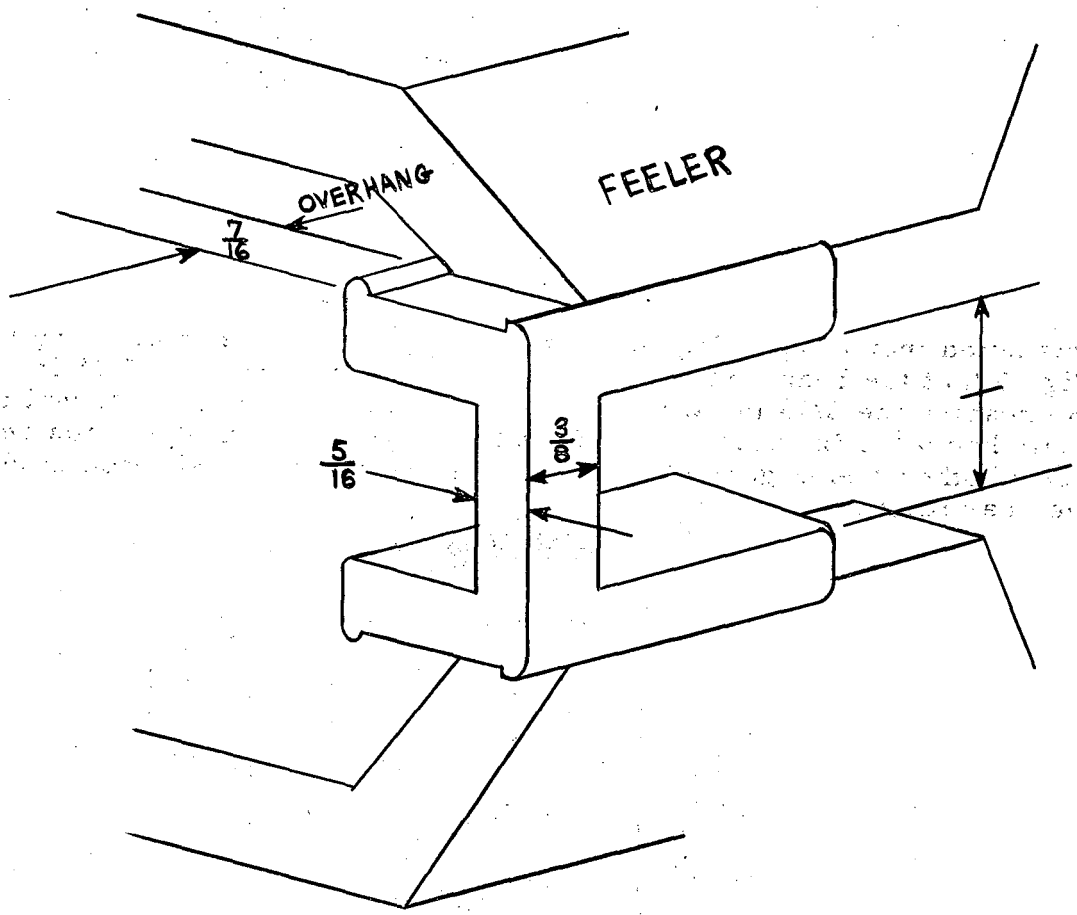

FIGURE 3

External beam patterns, taken under similar beam intensities, indicate a vertical focusing effect of a factor of about four between the plain feeler and inserted pole feeler runs. Without the pole, the vertical width of the deflected beam was 1/2 inch; with the pole the width was less than 1/8 inch. The ion source was run directly opposite the carbon feeler in a position so that the ion extraction orifice (1/8 in. x 3/4 in.) was centrally located with respect to the bar (Figure 4). This bar was maintained in operation for approximately two weeks during the running of molecular protons, alphas and deuterons with continued high performance. Upon removal, an erosion pattern

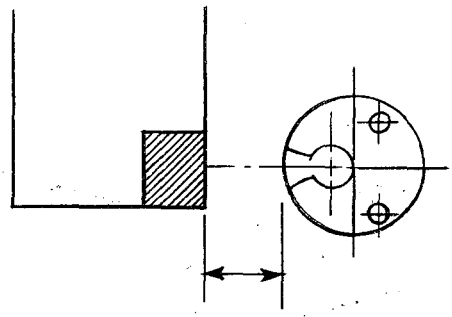

FIGURE 4

was noted indicating a degree of initial focusing. It is interesting to note in Fig. 5 that the beam entering the feeler dee narrows from 7/16 in. to 3/16 in. in crossing the 5/16 in. width of the feeler bar, while the external deflected beam had a 1/8 in. vertical width at the target. The preparation and examination of other feeler geometries with this method of installation is planned for the near future.

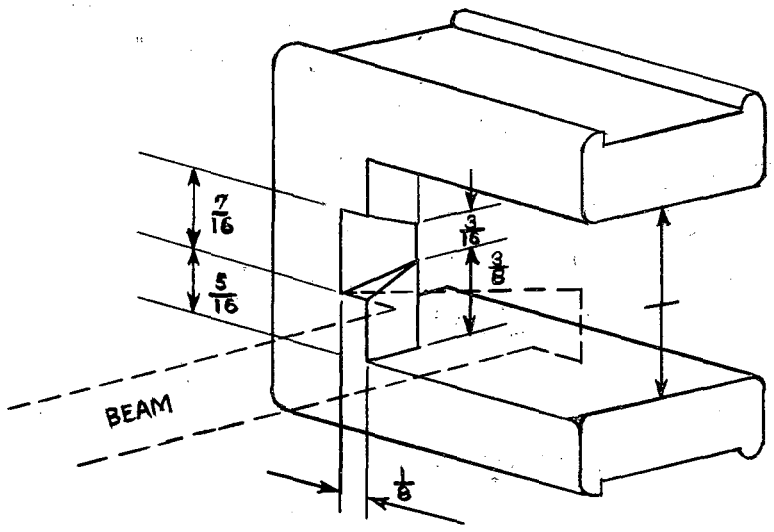

FIGURE 5

Probe Beam Monitoring. Kenneth D. Jenkins

In the past the internal beam current has been measured by the thermal heating of the probe cooling water. A fifteen-junction thermocouple pile was used between the input and output water. The output of the thermopile was amplified and converted to a current which was fed to the regular beam integrators. Calibration of the probe amplifier was made by using a resistor in the water cooling stream. When a measured current was passed through the resistor, the power dissipated was calculated. Then the equivalent beam current to produce the same power dissipation was calculated and the gain of the probe amplifier was adjusted so that the beam integrator read one-tenth of this calculated probe current.

The system for monitoring the beam has been changed because the thermopile that was in use became open-circuited. A temporary system of measuring the water temperature by using thermistors was tried and proved to be satisfactory and, in some ways, superior. The thermal time constant of the thermistor was several times faster than the thermopile and the output voltage of the thermistor bridge is high enough to operate the regular current beam integrator without the use of an amplifier. The thermal time lag on reading the beam is now about one second.

The circuit (Fig. 6) consists of a simple bridge with two thermistors, one in the inlet water and one in the output water. A small power supply maintains a voltage across the bridge. Calibration is the same as before.

The major drawback is that the system is not linear though, for the region of beam current over which we are interested, the linearity is within five percent, which is well within the total accuracy of this type of beam monitoring.

The most significant change has been in speeding up the response time of the system to a point where it is now possible to make more accurate adjustments of the cyclotron. This same response time could have been achieved by the proper design of the thermopile but, due to the simplicity and inexpensiveness of the thermistor bridge, this system is preferable.

3. Synchrotron

Operation. George McFarland

The synchrotron operation has been highly satisfactory during this report period.

Tests on the synchrotron were conducted in order to produce a longer time duration beam pulse at three-quarters and one-half of full energy. Limited success was achieved.

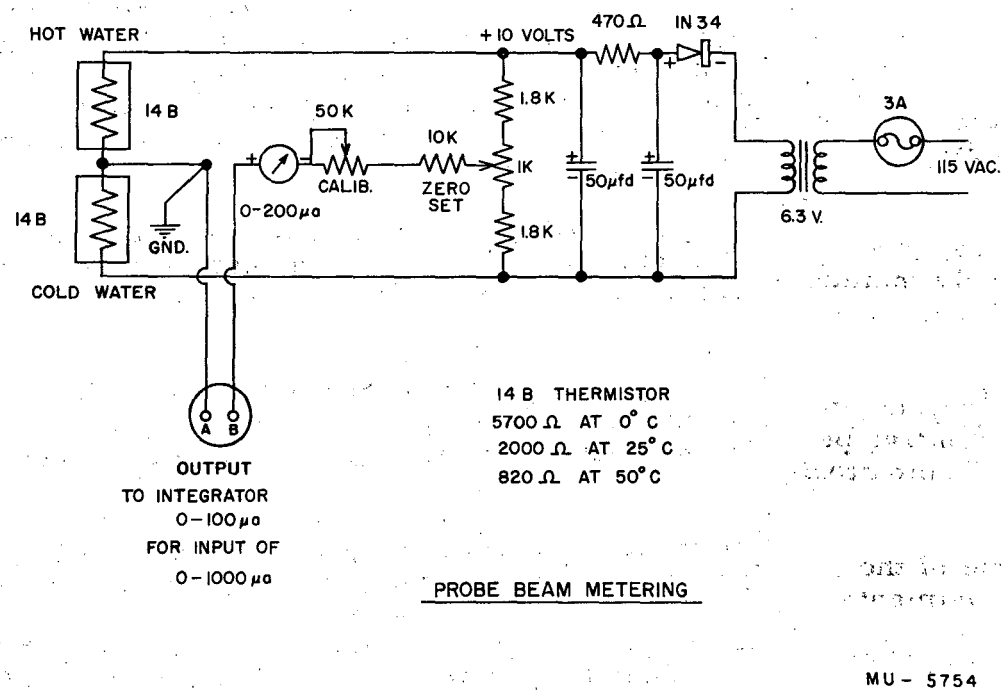
HOT WATER
+10 VOLTS
470 Ω
IN 34
14 B
50 K
10K
1.8 K
1K
1.8 K
3A
115 VAC.
CALIB.
ZERO SET
0-200 μa
50μfd
50μfd
6.3 V.
14 B
GND.
COLD WATER
A
B
OUTPUT
TO INTEGRATOR
0-100 μa
FOR INPUT OF
0-1000 μa
14 B THERMISTOR
5700 Ω AT 0° C
2000 Ω AT 25° C
820 Ω AT 50° C
PROBE BEAM METERING
MU- 5754

Figure 6

A great deal of progress has been made in shielding the synchrotron magnetic field from the leakage flux of the spiral orbit meson magnets. R. Sagane and W. Dudziak have evolved a scheme, using iron shields and a compensating coil, which has proved to be highly effective.

The electron linear accelerator has been reassembled and is operating successfully. Preparations are underway for building a new linear accelerator accelerating tube, using the electroforming process developed at the Stanford Microwave Laboratory.

A strong focusing assembly, which worked successfully on the test stand, is nearly ready for trial in the linear accelerator.

The inflector design is completed as far as the preliminary insulator configuration is concerned. A complete inflector assembly is now being built. Bombardments with the electron linear accelerator for various groups is continuing.

4. Linear Accelerator and Van de Graaff

Operation. R. Watt

During the quarterly period the running time for physics research of these accelerators was 67 percent of the available crew time. Of the remaining time 14 percent was spent on accelerator development research, 13 percent on repairs, and 6 percent on maintenance.

5. Bevatron

W. M. Brobeck

General

An additional $500,000 was requested to cover increased expenses in the bevatron project to make the total appropriation 9.5 million dollars. Additional expenses were primarily due to an increase in prices since the start of the project in 1948. $337,000 has been made available.

The working schedule calls for the overall vacuum pump down in July, measurement of the magnetic field in August, and completion to the point necessary to attempt to accelerate the high energy beam in October.

Magnet

The magnet pole bases, the parts of the magnet poles outside the vacuum envelope, have all been assembled and the lower ones have been installed in the magnet. About 40 percent of the pole tips which will be installed inside the vacuum envelope have been assembled. The equipment for measuring the strength and uniformity of the magnetic field is being designed. Model magnet measurements have been completed.

Vacuum System

All four of the straight sections of the vacuum tank have been received and three have been installed in their final position. Three of the quadrant tanks are installed and the fourth is about fifty percent assembled outside of the magnet.

Injector

The new Cockcroft-Walton high voltage supply for the 430 kv ion gun is completed and operating satisfactorily. A beam of 1.3 ma of analyzed protons is obtained. Electrical installation of the linear accelerator is almost complete. The major parts of the inflector are in procurement.

Accelerating System

The accelerating electrode is in place in the straight section tank and installation of cooling equipment, housing and platform are underway. All the high power electrical components are complete and have been individually tested. Frequency control and monitoring equipment is still being developed.

Controls

It has been decided during the period to remove the control room from the second floor to the magnet floor of the building for increased accessibility and better shielding. Wiring is proceeding for the relay racks of which there are approximately 100, and standard rack equipment is being fabricated. Equipment for a PAX telephone system for the building has arrived and is being installed.

Shielding

Design is proceeding on a shielding wall 15 to 20 ft. high surrounding about half the magnet circumference with a thickness of 5 ft. of heavy concrete. It is expected that this may have to be increased to 10 ft. at a later date. Shielding is not included in the original construction appropriation.