UCRL 2272

UNCLASSIFIED

UNIVERSITY OF CALIFORNIA

Radiation Laboratory

TWO-WEEK LOAN COPY

This is a Library Circulating Copy which may be borrowed for two weeks. For a personal retention copy, call Tech. Info. Division, Ext. 5545

BERKELEY, CALIFORNIA

DISCLAIMER

This document was prepared as an account of work sponsored by the United States Government. While this document is believed to contain correct information, neither the United States Government nor any agency thereof, nor the Regents of the University of California, nor any of their employees, makes any warranty, express or implied, or assumes any legal responsibility for the accuracy, completeness, or usefulness of any information, apparatus, product, or process disclosed, or represents that its use would not infringe privately owned rights. Reference herein to any specific commercial product, process, or service by its trade name, trademark, manufacturer, or otherwise, does not necessarily constitute or imply its endorsement, recommendation, or favoring by the United States Government or any agency thereof, or the Regents of the University of California. The views and opinions of authors expressed herein do not necessarily state or reflect those of the United States Government or any agency thereof or the Regents of the University of California.

UCRL-2272
Unclassified - Instrumentation

UNIVERSITY OF CALIFORNIA
Radiation Laboratory
July 10, 1953

THE "MECHANICAL PARTICLE", AN ANALOGUE COMPUTING MACHINE

Bayard Rankin
July 10, 1953

Berkeley, California

THE "MECHANICAL PARTICLE", AN ANALOGUE COMPUTING MACHINE

Bayard Rankin

Radiation Laboratory, Department of Physics
University of California, Berkeley, California

July 10, 1953

ABSTRACT

A machine is described which solves the equations of motion for a charged particle in a two dimensional magnetic field. Its accuracy is not limited by the steepness or the asymmetry of the field. Guided by remote control, the mechanism moves continuously over a contour map just as a particle would move through the field itself. The operator matches position, or local field value, with a parameter of the steering control, or curvature of the trajectory. He is able to interpolate continuously between lines of constant field value, thus speeding the process of solution and increasing the accuracy. In five minutes a 40-inch orbit can be drawn over which the field values vary through 23,000 Gauss. Five minutes are required for introducing initial conditions, including momentum. For regions in which the field is more than half maximum, the orbits of the mechanical particle and the electromagnetic particle coincide in their radii of curvature to within 0.5 percent. Accuracy is less for low field values. The performance characteristics have been determined from a working instrument which is fully described. An alternative computer design to the one already in use is also discussed.

THE "MECHANICAL PARTICLE", AN ANALOGUE COMPUTING MACHINE

Bayard Rankin

Radiation Laboratory, Department of Physics
University of California, Berkeley, California

July 10, 1953

INTRODUCTION

The three dimensional vector equation

$$d/dt\,(m\vec{v}) = e/c\,(\vec{v} \times \vec{H}) \tag{1}$$

has never been solved in general closed form. Yet its importance has warranted many studies of approximate and particular solutions*. It contains all the information about a charged particle's motion in a magnetic field, $\vec{H}$, so long as the initial conditions are specified. Even the simpler form of (1), obtained by setting Hx = Hy = 0 is intractable:

$$\begin{aligned} m\ddot{x} &= e/c\ \dot{y}\, H_z\,(x, y) \\ m\ddot{y} &= -\,e/c\ \dot{x}\, H_z\,(x, y) \end{aligned} \tag{2}$$

The function $H_z\,(x, y) = [0,\ 0,\ H_z\,(x, y, 0)]$ expresses a plane of symmetry field from the physical standpoint.

A restatement of the equations (2) is easily shown to be

$$\begin{aligned} H_z\,(x, y)\ \rho\,(x, y) &= mvc/e \\ mv &= \text{const.} \end{aligned} \tag{3}$$

where $\rho\,(x, y)$ is the local radius of curvature, v is the absolute value of the velocity, and m is the constant relativistic mass. This form appeals to our geometric intuition and suggests that an analogue machine might solve the plane of symmetry case quite accurately, completely eliminating the tediousness of numerical methods. A device is needed which will pass over a contour map of the field. It must obey a mechanical restriction which is the analogue to the

*e.g., Norman D. Coggeshall and Morris Muskat, Phys. Rev. 66, 187 (1944); Walter H. Barkas, Phys. Rev. 78, 90 (A) (1950); Bayard Rankin, John Kileen, and Walter H. Barkas, B.A.P.S. 26, No. 8, 6 (1951).

electro-magnetic restriction placed on a particle itself, namely, that the local radius of curvature, ρ, satisfy equation (3). A little machine easily adapted to the purpose is readily in the minds of all of us: a child's tricycle. The only additions to the toy are a pen between the back wheels and a steering control which makes the angle, ϕ, between the front and back wheels a continuous function of position, according to the equation

$$\tan \phi = (\text{const.})\, H_z\, (x, y) \tag{4}$$

The pen delineates the path of a charged particle.

Similarly, if the magnetic field itself were available instead of its map, the pen could again describe an orbit: A field sensitive device is needed which steers according to equation (4).

Once the fundamental idea is suggested, a great variety of analogue machines can be imagined. Two are described in some detail in this paper. They are chosen for their simplicity and practicality. The completely "mechanical particles", or magnetic field sensitive machines, will be discussed in a later paper.

THEORY

How does the tricycle solve two simultaneous equations as it rolls? Consider the following: If ϕ is constant, the mechanism rolls in a circle and the pen, centered between the back wheels, describes an arc of radius

$$\rho = D/\tan \phi \tag{5}$$

As in Fig. 1, D is the wheel base. If ϕ is restricted through equations (3) and (5) as the machine rolls, that is, if

$$\tan \phi = D/\rho_o \; (H/H_o) \tag{6}$$

an orbit is described, provided no dynamic contribution to ρ (involving the rate of change of ϕ) develops. H_o and ρ_o are the maximum H value and the corresponding ρ value. H is the field value at the pen position.

To prove that the simultaneous movement of the machine and the steering wheel does not distort the local radius of curvature of the pen, the following argument is necessary. Let X'Y' be a Cartesian coordinate system fixed in space and XY a local system fixed to the machine as in Fig. 2. Imagine the pen to be fixed to the machine at some arbitrary point (a, b). Let the angle between the X and X_1 axes be θ. Now some curve C will be drawn by the pen, whose length starting at an arbitrary point is s and whose tangent vector and curvature at the pen position are $\vec{\tau}$ and $\vec{K}$. Writing α as the angle between

$\vec{\tau}$ and the positive X-axis, it is clear that $\alpha = \alpha(s, \phi)$ is a function of the two independent variables s and ϕ. Moreover,

$$|\vec{K}| = \frac{d\alpha}{ds} = \left(\frac{\partial \alpha}{\partial s}\right) + \left(\frac{\partial \alpha}{\partial \phi}\right) \frac{d\phi}{ds} \quad . \tag{7}$$

The partial derivatives can be determined from geometry to yield

$$|\vec{K}| = \frac{1}{\rho} = \left[a^2 + \left(b + \frac{D}{\tan \phi}\right)^2 \right]^{-1/2} + \frac{d}{d\phi} \left[\arctan\left(\frac{a}{b + \frac{D}{\tan \phi}}\right) \right] \frac{d\phi}{ds} \tag{8}$$

Hence, if a = 0, the rate of change of ϕ, $d\phi/ds$, does not influence the local radius of curvature. If b = 0, the machine can accommodate different initial conditions in momenta conveniently, as will now be shown.

The initial conditions in direction and position are, of course, introduced by orienting the machine properly on the topological map. A specified momentum $H_o \rho_o$ is most easily introduced by setting $D = \rho_o$, if possible. This done, equation (6) shows that the same conversion scale from ϕ to H can be used for particles of any momentum which pass through the field H. If D cannot always be set equal to ρ_o in practice, it can at least be taken as $\rho_o/2^n$, n = 1, 2, . . . , N, allowing a fixed number of conversion scales to be sufficient for a continuum of momenta. For this convenience, it should be adjustable in a practical machine throughout the range (min ρ_o, 2 min ρ_o), where min ρ_o corresponds to the smallest momentum encountered.

A slightly different design will lead to a linear equation between the controlling variable and H. It is again a tricycle. This time, the two wheels ride in front and govern the direction by moving at controlled velocities. A third wheel trails behind. Suppose that ω_1 and ω_2 are the angular velocities of the left and right wheels, respectively, and suppose L is the distance separating the points of contact of the two wheels with a plane. An argument similar to the previous one leads to the equation:

$$\frac{\omega_2}{\omega_1} = 1 - \frac{L}{\rho_o} (H/H_o), \quad \omega_2 \leqslant \omega_1 , \tag{9}$$

where H is the field value read at the point of contact between the left wheel and a contour map. An orbit will be described by the left wheel, assuming it is inked on its periphery, so long as ω_2 varies linearly with H, ω_1 can be held constant. L can be adjusted to advantage as D was.

A WORKING INSTRUMENT

The ideas put into practice have led to a mechanical particle shown in Figs. 3 and 4. Admitting less than one percent error, the machine has traced meson trajectories "through the field" of a cyclotron magnet. Between five and ten minutes are required to set in initial conditions and draw a 40-inch orbit. More will be said about the orbits after describing the device.

As seen in Fig. 3, it operates according to the first principle given above: The angle of the front wheel is controlled according to equation (6). For generality, contour lines of equal H values have been drawn for a non-axially symmetric field and can be seen in the background. They are numbered consecutively from the center of the map outward. Their spacing is chosen for convenience, since the change in H between the lines (or the corresponding change in ϕ) can be stored on a disk in the form of a circular scale and connected through a gear box to the steering mechanism. The disk is uppermost in Fig. 3. Fig. 5 shows it in close up together with a graph of the assymetric magnetic field plotted as a function of contour line number. The circular scale, constructed from the graph, gives $60\,\phi = 60 \arctan (H/H_o)$ corresponding to every contour line from 21 to 56. A similar scale for the region from 1 to 20 is on the reverse side of the disk and can be seen in Fig. 3. Between lines 20 and 21 a plateau in H occurs over which the particle travels in a circle. In the case of axial symmetry, all the information about the field is stored on the disk, the contour lines becoming equally spaced concentric circles. In the general case, all but the asymmetry is stored there. When the machine is operating, both the steering motor (between the front wheel and the disk) and the drive motor (between the back wheels) are in continuous motion with speeds determined by the operator. The operator who governs the motors at a remote distance watches the disk and the pen simultaneously, seeing to it that the pen crosses a contour line at the same moment the corresponding ϕ line on the disk passes under a stationary needle. Continuous interpolation, which is possible by anticipating the cross-over points and varying the motor velocities continuously, lends the true differential character to the machine.

A protractor, attached rigidly to the front wheel, is read at the lateral pointers when initial conditions are being introduced. It and the front wheel move at a maximum speed of 1 R.P.M. in either direction. Any intermediate speeds are also available, though two self starting synchronous motors supply the driving force: Either of two motors placed back to back may be

given full voltage and the second, linked to the first through their rotors, will supply a constant braking force increasing with increasing voltage across its coils. When both motors are given full voltage the steering wheel stops turning. The reversed linkage which is feasible only because of the non-synchronous, self-starting properties of the motors offers variable speeds. At the same time, the drive shaft of the upper motor can be conveniently attached through a gear box to the disk. The disk and motor assembly can be disengaged from the steering wheel (Fig. 4) to allow quick resetting of the wheel to new initial conditions. A removable phosphor-bronze piece clamps to the front wheel block with two worms and holds two screw heads as receptacles for the drive pin of the lower synchronous motor. An increased gear ratio of 1-60 from the wheel to the disk permits the wheel positions to be known to 0.01° at best. Actually, a continuous control to 0.1° is the practical limit.

One of the back wheels is linked through a friction clutch and a gear box to a small d.c. motor. The motor, housed in brass and plastic, clamps to an aluminum elbow whose purpose it is to fix the back axle and chassis rod at 90°. A small set-screw beneath the elbow holds the chassis rod in place after the wheel base D has been established.

Each of the back wheels and their axles roll independently in two sets of Miniature Precision super-light radial ball bearings. The right axle, for instance, is encircled by two ball bearing rings three inches apart and the outer races of the rings are housed in a common brass tube. The twin bearing houses slide snugly into opposite ends of the visible brass tube. Such a construction allows symmetrical alignment to within 0.001 inch. There is no detectable "play" in the back wheels.

The front wheel and its 1-1/2 inch axle pivot in two Miniature Precision angular contact bearings. The bearing rings themselves are recessed in the inner member of a horizontal friction bearing of two-inch diameter and are positioned for tighter or looser contact with the axle by set screws. Bronze against nickle-coated bronze provides the horizontal bearing surface while an aluminum plug hollowed in a diamond shape extends the inner member and houses the wheel. All three wheels of the mechanical particle are machined from brass to tolerances consistent with other specifications of 0.001 inch. Their rims are reasonably sharp. Radial slipping is, thus, minimized and at the same time well defined contact points are established.

The advantage of the second design described in the "theory" section is found in the simplicity of construction. Accurate machining is

required to do two things: to control L, the distance between two wheels, and to control the radii of each. The disadvantage is found in the complications of a velocity control for guiding the wheels. A trial model was made according to this design at the University of California Radiation Laboratory. A synchronous motor driving each front wheel controlled the respective velocities; one was fed by a variable oscillator. In this way, good results were obtained for a limited range of radii of curvature, but the rotors of the synchronous motors available would slip out of phase when run much below standard velocities. Consequently, all the succeeding remarks about operation and results will refer to the model shown in Figs. 3 and 4.

OPERATION AND RESULTS

Little is left to be desired when the machine rolls in a circle - the uniform field case. Circles of diameter 30 inches have been reproduced four and five times without a drift as great as the pen point thickness. Of course, a level table and a smooth paper on a plate glass surface are essentials for careful operation. The perfect circles are trivial in themselves. They demonstrate convincingly, however, where the limitations in accuracy enter when performing the mechanical analogue to the mathematical development of a solution. Error enters when the operator matches angle with field value.

With extreme care it is possible to match the initial angle and field value to 0.05° in ϕ, ϕ and H being related by (6). More accuracy is useless, because the initial direction of the instrument as a whole is uncertain to the same extent and field values are generally not known to better than one percent. During slow dynamic operation it is reasonably easy to keep the angle correct to within the tooth spacing on the rim of the disk. These spacings correspond to 0.1°, or, from the following formula, to about 0.5 percent change in local radius of curvature (assuming average conditions, i.e., $D/\rho_o = 1$ and $H/H_o = 1/2$):

$$-\Delta\rho/\rho = \Delta H/H = [1 + (D/\rho_o)^2 (H/H_o)^2] \rho_o/D \; (H_o/H) \Delta\phi \qquad (10)$$

The orbits mentioned in the last section can be interpreted as meson trajectories which will be determined by the proposed 184-inch Berkeley cyclotron magnet. The present cyclotron magnet will be converted to produce about a 23,000 gauss field. Considering other changes, the mesons created will attain energies near 500 Mev. Adequate energies and fluxes will be available for good external meson beams. It is only desired to know in advance what

the behavior of the mesons will be so that adequate shielding and ports can be provided. Accordingly, the field shape has been determined by model tests and orbits of 100, 200, 300, 400, and 500 Mev have been drawn with different initial angles. In reality, careful results were of interest only for proving out the mathematical machine. With that in mind, only reproducibility checks were made. They were consistent with 0.5 percent accuracy.

ACKNOWLEDGMENTS

I wish to thank Dr. W. H. Barkas and Mr. Philip Carnaham for their suggestions about a practical model and Mr. Manual M. Alcalde for his advice about machining techniques. Dr. Harry B. Keller and Mr. Myron L. Stein investigated the possibilities of the velocity control design and Mr. Edwin Iloff pointed out the need for a dynamical justification of equation (6) and outlined the proof.

FIGURE CAPTIONS

Fig. 1 - Diagramatic sketch of the mechanical particle showing the three wheels, two essential connecting members, and the pen.

Fig. 2 - Diagramatic sketch of a tricycle with a pen attached rigidly at an arbitrary point (a, b). X'Y' is a fixed Cartesian coordinate system, XY is a local system.

Fig. 3 - The mechanical particle. A model which operates according to equation (6). A contour map of an asymmetric field can be seen in the background. When the machine is running, both the steering motor (between the front wheel and the disk) and the drive motor (between the back wheels) are in continuous motion, with speeds determined by the operator. The point of contact between the front wheel and the map is not visible.

Fig. 4 - The mechanical particle with disk and motor assembly disengaged from the steering wheel. In this position, the phosphor-bronze clamp (directly above the front wheel) can be reoriented on the front wheel block to accommodate new initial conditions. The drive pin can be seen which fits into the screw-head receptacles on the clamp.

Fig. 5 - The disk and circular scale together with a graph of an asymmetric field plotted against contour line number. The asymmetry of the field is seen in Fig. 3 where the contour lines number from the center of the map outward. The scale, prepared from the graph by use of equation (6), gives an angular mark corresponding to each contour line from 21 to 56.

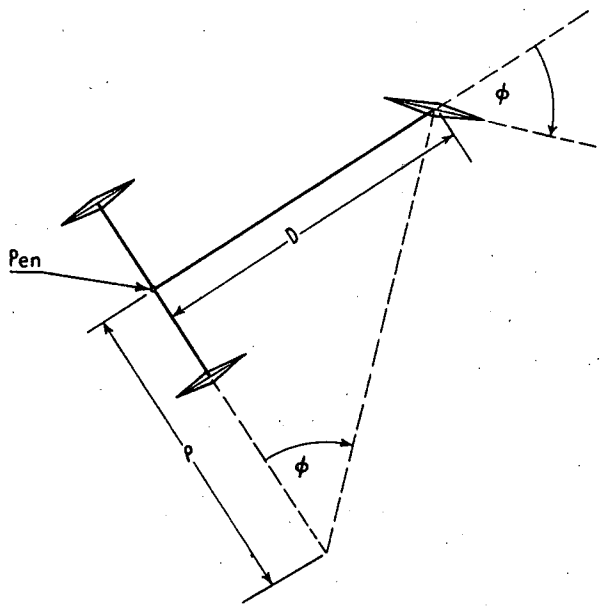

MU-5808

Fig. 1

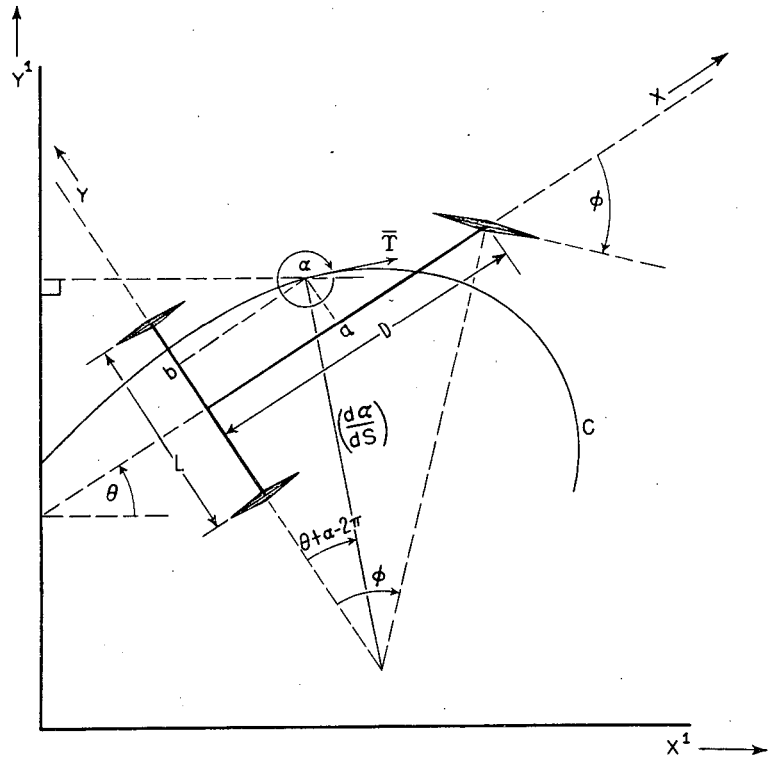

MU-5807

Fig. 2

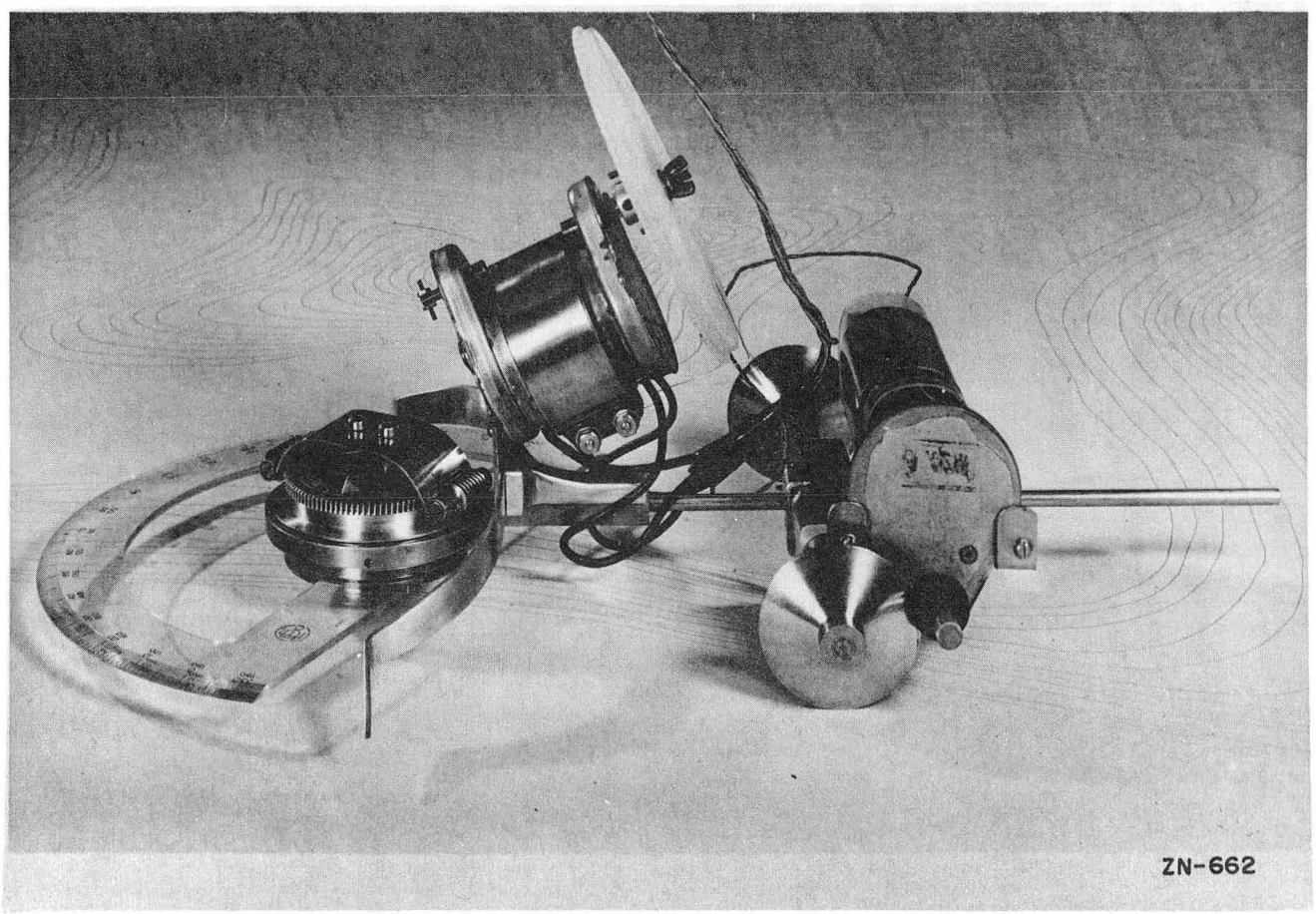

Fig. 3

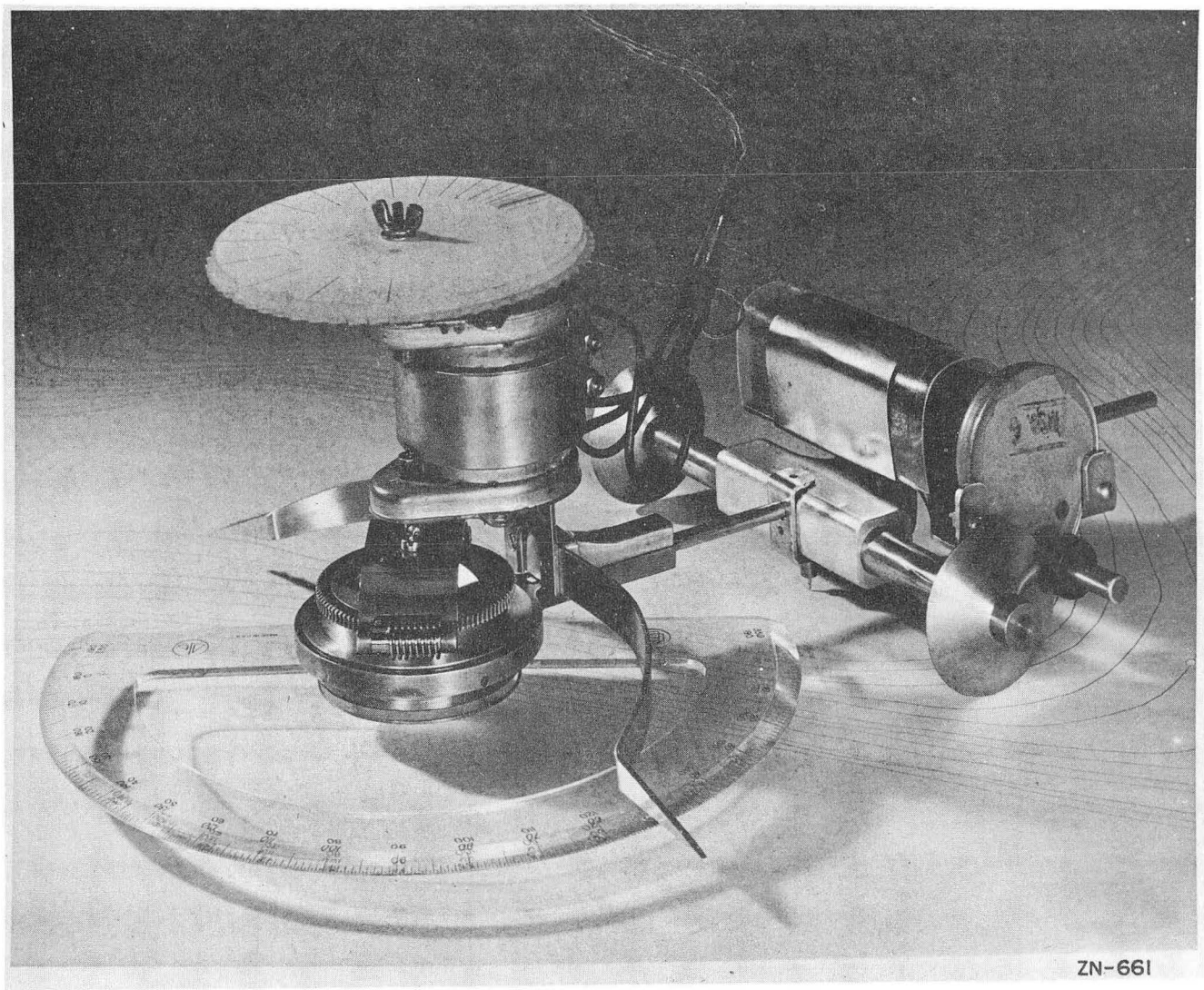

Fig. 4

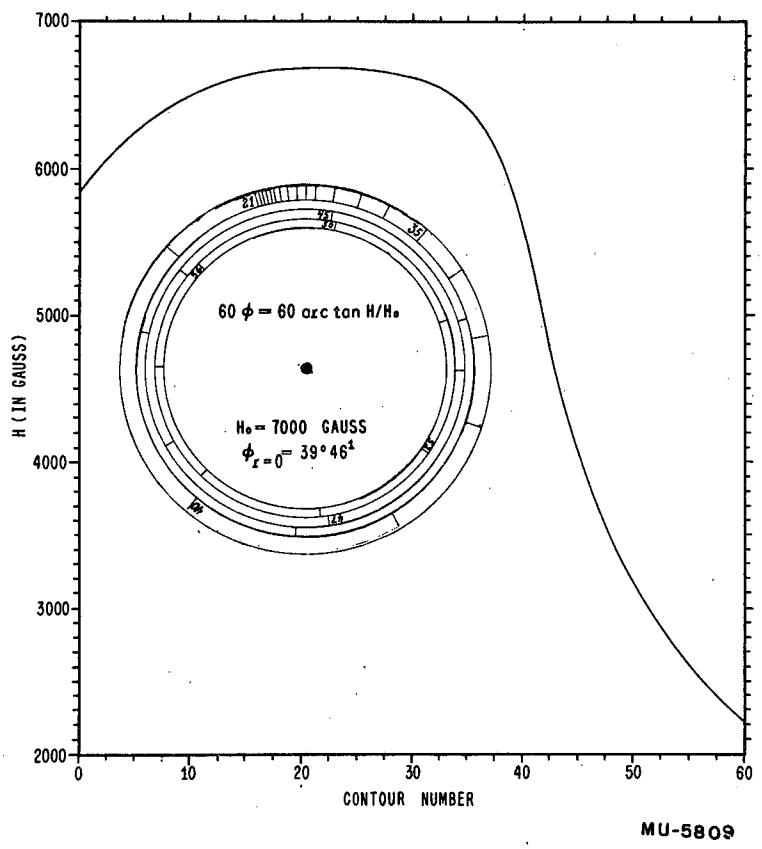
7000
6000
5000
4000
3000
2000
H (IN GAUSS)
0
10
20
30
40
50
60
CONTOUR NUMBER
60 φ = 60 arc tan H/H₀
H₀ = 7000 GAUSS
φ_{r=0} = 39°46'
MU-5809

Fig. 5