UCRL 2348

UNCLASSIFIED

UNIVERSITY OF CALIFORNIA

Radiation Laboratory

TWO-WEEK LOAN COPY

This is a Library Circulating Copy which may be borrowed for two weeks. For a personal retention copy, call Tech. Info. Division, Ext. 5545

BERKELEY, CALIFORNIA

DISCLAIMER

This document was prepared as an account of work sponsored by the United States Government. While this document is believed to contain correct information, neither the United States Government nor any agency thereof, nor the Regents of the University of California, nor any of their employees, makes any warranty, express or implied, or assumes any legal responsibility for the accuracy, completeness, or usefulness of any information, apparatus, product, or process disclosed, or represents that its use would not infringe privately owned rights. Reference herein to any specific commercial product, process, or service by its trade name, trademark, manufacturer, or otherwise, does not necessarily constitute or imply its endorsement, recommendation, or favoring by the United States Government or any agency thereof, or the Regents of the University of California. The views and opinions of authors expressed herein do not necessarily state or reflect those of the United States Government or any agency thereof or the Regents of the University of California.

UCRL-2348
Unclassified-Physics Distribution

UNIVERSITY OF CALIFORNIA

Radiation Laboratory

Contract No. W-7405-eng-48

A NOTE ON THE PRODUCTION OF POSITIVE MESONS IN HEAVY NUCLEI

S. Gasiorowicz

September 30, 1953

Berkeley, California

A NOTE ON THE PRODUCTION OF POSITIVE MESONS IN HEAVY NUCLEI

S. Gasiorowicz

Radiation Laboratory, Physics Department
University of California, Berkeley, California

ABSTRACT

The data on the A-dependence of low energy meson production by protons on heavy nuclei is explained by taking into account the following effects: (1) the energy degeneration of the incident proton in nuclear matter, which tends to make meson production possible only in the "front" of the struck nucleus; (2) the subsequent re-absorption of the meson by the nuclear matter it traverses. This last effect is further strengthened by the reflectivity of the Coulomb barrier.

A NOTE ON THE PRODUCTION OF POSITIVE MESONS IN HEAVY NUCLEI

S. Gasiorowicz

Introduction

Recent experiments[1] on the production of positive mesons in collisions of protons with heavy nuclei indicate that for fixed proton and meson energies, $\sigma(A)/A^{2/3}$, and hence $\sigma(A)/A$, decreases with A, the number of nucleons in the target nucleus. This suggests that neither a direct "independent particle" nor a "surface" production mechanism is in itself sufficient to explain the data. It is the purpose of this note to point out that the decrease in the "meson production efficiency" with A is a consequence of the rapid energy degeneration of the incident proton in nuclear matter, which makes meson production possible only in the "front" of the struck nucleus, together with a meson attenuation effect which becomes more important with increasing A.

Let us first describe our model of the nucleus. We assume a continuous distribution of nuclear matter of constant density (except for a sharply tapering off boundary region which we ignore); we also assume that the nucleons move in a uniform nuclear potential. The latter assumption has the following consequence: due to the presence of the Coulomb barrier, the protons tend to be confined to a region of somewhat smaller radius

[1] W. Dudziak and R. Sagane (to be published) and D. Clark, Phys. Rev. 87, 157 (1952).

compared to the nucleus as a whole, and for the same reason a much shorter tail is expected for the proton distribution[2]. (See Fig. 1)

[2] The fact that the radius of the nuclear charge distribution appears to be smaller than the nuclear radius is indicated by recent measurements of X-rays from mesic atoms (Proceedings of the 3rd annual Conference on High Energy Physics at Rochester, 1952), and by the scattering of 100 Mev electrons from heavy nuclei.

Proton Energy Degeneration

Let us consider a proton of 240 - 340 Mev entering a heavy nucleus. The proton has a mean free path for elastic scattering[3] which can be computed

[3] The concept of a mean free path is meaningful here since at the energies being considered, the de Broglie wave length of the proton is much smaller than the inter-nucleonic distance, so that diffraction effects are expected to be negligible.

by using the free particle cross-sections $\sigma_{pp} \simeq 25$ mb. and $\sigma_{np} \simeq 40$ mb. in this energy range. The approximate constancy of these values over a fairly wide energy range allows us to ignore the dependence of the scattering mean free path on the momentum distribution of the nucleons forming the target nucleus, provided that the "width" of such a distribution $\lesssim 200$ Mev/c.[4]

[4] Assuming that the "width" of the momentum distribution is insensitive to changes in A, this condition is met for all A, since it is satisfied for deuterium and carbon. Cf., Cladis, Hess and Moyer, Phys. Rev. 87, 425 (1952).

We thus obtain

$$\lambda_s = (4\pi/3)\, R^3 \left[Z\, \sigma_{pp} + N\, \sigma_{np} \right]^{-1} = R\, A^{2/3} \left[0.26\, Z + 0.42\, N \right]^{-1} \tag{1}$$

Now on the average, after traveling a distance λ_s, the proton will undergo an elastic collision and (again on the average) lose 50% of its energy in the process. Hence for a proton of 240 Mev only one zone of depth λ_s is available for meson production, while for protons of 340 Mev all particles in the first zone, and roughly half the particles in the second zone (those whose momentum vector have a positive component pointing towards the incoming proton), are available for meson production.

Experiments[5] indicate that the process

$$p + p \rightarrow \pi^+ + d$$

---

[5] For example, Carothers and Andre, Phys. Rev. 88, 1426 (1952). These experiments have been extended to lower energies by W. Dudziak (private communication).

---

is a great deal more likely than the process

$$p + n \rightarrow \pi^+ + 2n \; .$$

The large suppression of the latter process is partly due to the exclusion principle: in the latter case there are three particles in the final state and since the two identical neutrons tend to keep away from each other the phase space available to each particle is appreciably reduced. A much larger

suppression of the process can be expected if conservation of isotopic spin is assumed together with a strong interaction in the $T = 3/2$ state[6].

---

[6] Ruderman, Phys. Rev. 88, 1427 (1952). Note that the conclusions regarding the process $p + n \rightarrow \pi^-$ must apply identically to the process $p + n \rightarrow \pi^+$ by charge independence.

We thus assume that only the protons in the target nucleus are effective in producing positive mesons and so we write

$$\text{for 240 Mev protons} \qquad \sigma = \sigma_0 Z_1$$
$$\text{for 340 Mev protons} \qquad \sigma = \sigma_0' (Z_1 + \tfrac{1}{2} Z_2) \tag{2}$$

where Z_i is the number of protons in the i-th zone. We remark here that as pointed out above the protons are confined to a somewhat smaller volume by the Coulomb barrier, and this serves to reduce the number of protons in the first zone (Fig. 2). We find that

$$Z_1(\lambda_s)/Z = (R/P)^3 \left\{ \tfrac{1}{2} (P/R)^2 \left[x/R + \lambda_s/R - 1 \right] + \tfrac{1}{2} (x/R) \left[(\lambda_s/R) - 1 \right] + \tfrac{1}{2} (P/R)^3 - \tfrac{1}{4} (x/R)^2 (\lambda_s/R) \right\} \tag{3}$$

and

$$(Z_1 + Z_2)/Z = Z_1(2\lambda_s)/Z$$

where

$$(x/R) = \left((P/R)^2 - (1 - \lambda_s/R)^2 \right)(R/2\lambda_s)$$

where R is the nuclear radius (taken to be $1.5 \times 10^{-13} A^{1/3}$ cm), and

P is the radius of the "charge distribution". We assume that $= .90\ R$ [7].

---

[7] A charge distribution radius 10% smaller than the nuclear radius is suggested by an interpretation of the experiments of Fitch and Rainwater on X-rays from μ -mesic atoms. Cf., Cooper and Henley, Phys. Rev. 91, 480 (1953).

Meson Absorption

Once a meson is produced, it travels through nuclear matter for a distance d. The chance that the meson will undergo absorption may be described by a mean free path for absorption λ_a of the order of $6 - 7 \times 10^{-13}$ cm [8] and the probability of the meson reaching the boundary

---

[8] Brueckner, Serber and Watson, Phys. Rev. 84, 258 (1951).

---

is $\exp\left(-d/\lambda_a\right)$. The presence of the Coulomb barrier gives rise to a reflection probability $(1 - T)$. Consequently the probability that a meson finally gets out of the nucleus without being absorbed is

$$\frac{T \exp\left(-d/\lambda_a\right)}{1 - (1 - T) \exp\left(-2R/\lambda_a\right)} \simeq T \exp\left(-d/\lambda_a\right). \tag{4}$$

We have calculated T for $\ell = 0$ waves only, since it turns out that the centrifugal barrier contributes less than 10% to the transmission coefficient. The factor $\exp(-d/\lambda_a)$ was also computed with λ_a chosen

equal to 6.5×10^{-13} cm and an average "d" = f R. The calculation was carried out with $f = 1/2$ and $f = 1/3$ [9], for Al, Cu, Ag and Pb. A

[9] Small values of f were chosen for the experiments under consideration since the mesons were observed at 90° and $\sim 140^\circ$. For mesons at 0° one would have to take $f \simeq 1.0 - 1.5$.

comparison with the data of Dudziak and Sagane and of Clark is made in figures 3 and 4 respectively.

Conclusion

As figures 3 and 4 show, the agreement of theory with experiment is quite satisfactory. In view of uncertainties in the value of λ_a and f, the experiments cannot be said to confirm or deny the conclusions of other experiments which suggest a radius of the charge distribution smaller than the nucleus as a whole. With a choice $P = R$ the theoretical curves would be shifted upwards by 5 - 10%. Nevertheless it was felt that an independent particle model for the nucleus with the inclusion of Coulomb effects must lead to such an effect, and it was therefore taken seriously.

In view of difficulties in obtaining Coulomb wave functions for attracting particles, no detailed comparison with the π^- data is here made.

The author is grateful to Professor Sagane and Dr. Dudziak for communicating to him the results of their experiments prior to publication. Discussions with Drs. J. Lepore, W. Heckrotte, M. H. Johnson, and T. Kinoshita are gratefully acknowledged.

FIGURE CAPTION

Figure 1: A schematic representation of potentials acting on the nucleons in a nucleus. OA = R, the nuclear radius; OB = P , the charge distribution radius; (a) is the neutron tail; (b) the proton tail; (c) the highest proton and neutron levels; and (d) the coulomb barrier.

Figure 2: The meson production zones in the target nucleus. OA = R, the nuclear radius; OB = P, the charge distribution radius; (a) first zone; and (b) second zone.

Figure 3: Comparison with the data of Dudziak and Sagane. The solid lines are the theoretical curves. (a) E_π = 13 Mev, f = $\frac{1}{2}$; (b) E_π = 13 Mev, f = 1/3; (c) E_π = 27 Mev, f = $\frac{1}{2}$; (d) E_π = 27 Mev, f = 1/3. All curves and the experimental points are normalized to unity at Pb.

Figure 4: Comparison with the data of Clark. The solid line is the theoretical curve for E_π = 40 Mev, f = 1/3. The curve and the experimental points are normalized to unity at Pb.

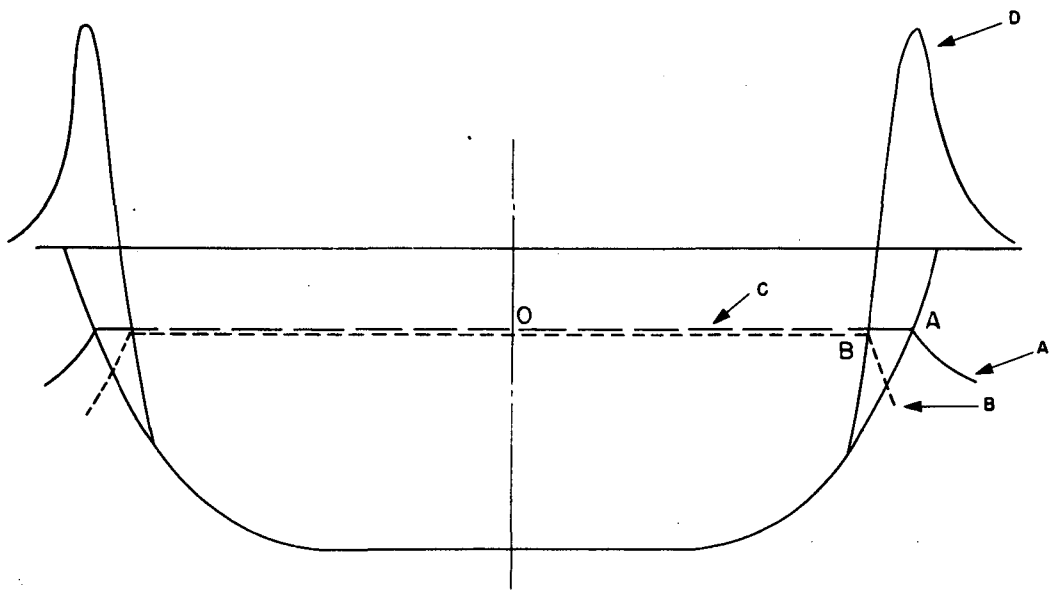

MU-6596

Fig. 1

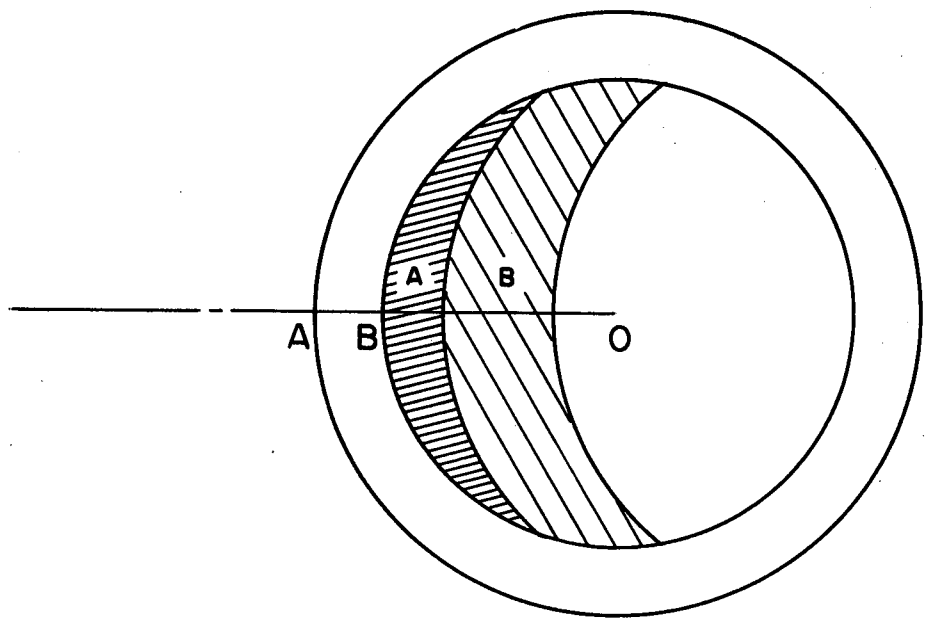

MU-6597

Fig. 2

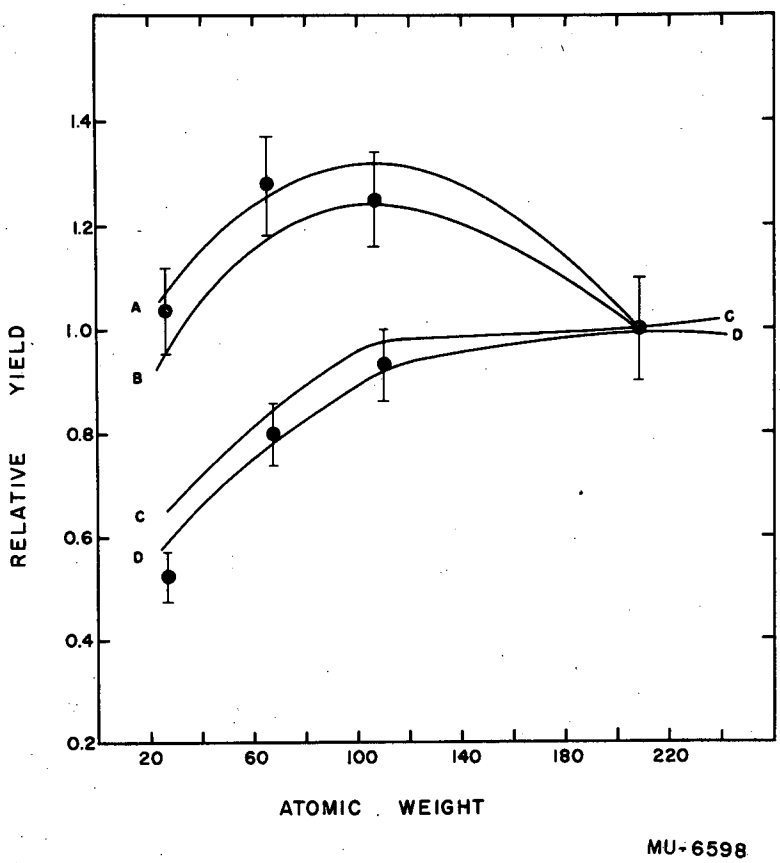
1.4
1.2
1.0
0.8
0.6
0.4
0.2
RELATIVE YIELD
A
B
C
D
C
D
20
60
100
140
180
220
ATOMIC WEIGHT
MU-6598

Fig. 3

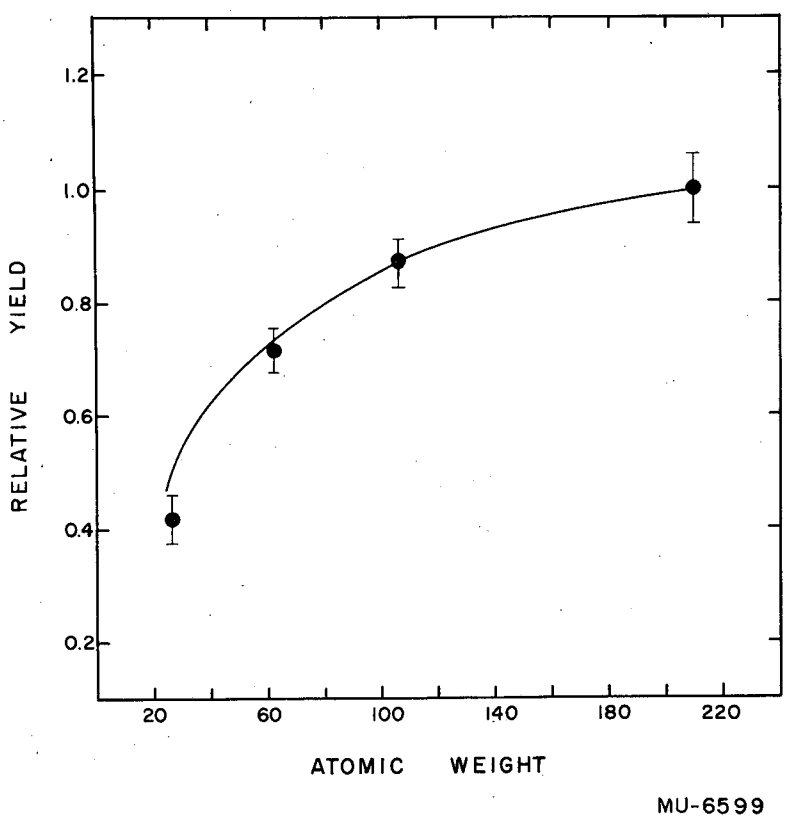
1.2
1.0
0.8
0.6
0.4
0.2
RELATIVE YIELD
20
60
100
140
180
220
ATOMIC WEIGHT
MU-6599

Fig.4