UCRL 2354
UNCLASSIFIED

UNIVERSITY OF
CALIFORNIA

Radiation Laboratory

TWO-WEEK LOAN COPY

This is a Library Circulating Copy which may be borrowed for two weeks. For a personal retention copy, call Tech. Info. Division, Ext. 5545

BERKELEY, CALIFORNIA

DISCLAIMER

This document was prepared as an account of work sponsored by the United States Government. While this document is believed to contain correct information, neither the United States Government nor any agency thereof, nor the Regents of the University of California, nor any of their employees, makes any warranty, express or implied, or assumes any legal responsibility for the accuracy, completeness, or usefulness of any information, apparatus, product, or process disclosed, or represents that its use would not infringe privately owned rights. Reference herein to any specific commercial product, process, or service by its trade name, trademark, manufacturer, or otherwise, does not necessarily constitute or imply its endorsement, recommendation, or favoring by the United States Government or any agency thereof, or the Regents of the University of California. The views and opinions of authors expressed herein do not necessarily state or reflect those of the United States Government or any agency thereof or the Regents of the University of California.

UCRL-2354
Unclassified-Internal Distribution

UNIVERSITY OF CALIFORNIA

Radiation Laboratory

Contract No. W-7405-eng-48

INSTRUCTIONS FOR USE OF 184-INCH CYCLOTRON GAS RECOVERY SYSTEM

John Ise, Jr. and George P. Millburn

October 1, 1953

Berkeley, California

UCRL-2354
Unclassified-Internal Distribution

INSTRUCTIONS FOR USE OF 184-INCH CYCLOTRON GAS RECOVERY SYSTEM

John Ise, Jr. and George P. Millburn

Radiation Laboratory, Department of Physics,
University of California, Berkeley, California

October 1, 1953

INTRODUCTION

The gas-recovery system is designed to recirculate helium through the cyclotron; the gas being returned to the cyclotron is purified so as to remove all gases except helium, hydrogen, and neon.

The flow diagram of the system is shown in Fig. 1. Gas is pumped from the cyclotron tank by the diffusion pumps, which are backed by a modified 100-CFM Kinney mechanical vacuum pump. The exhaust side of the Kinney is held near vacuum by a 2-CFM Kinney pump, which pumps the gas through a liquid-nitrogen-cooled, activated charcoal trap. The trap removes all gases except the three listed above.[1] After passing through the trap the gas is fed back into the cyclotron filament probe through a needle valve which controls the rate of flow. A charcoal-liquid-nitrogen trap between the needle valve and the filament probe serves mainly to keep oil vapor out of the tank.

There are two parallel charcoal traps on the intake side of the system. They are used singly, the second trap being used when the first is saturated. There are also two storage reservoirs in the system, each of which contains helium of different He^3 enrichment. A storage reservoir consists

[1] Dushman, S., Vacuum Technique, John Wiley and Sons, 1949

of a large brass cylinder plus the tubing between the cylinders and the valve at the intake side of the 2-CFM Kinney pump associated with the particular reservoir. One storage reservoir is painted green (I) and the other blue (II).

The color code used to identify components of the system includes:

(1) White: lines used in common with either of the two storage reservoirs.

(2) Red: lines which lead to the auxiliary pump (Duo-seal). These lines should not be opened when the system is in steady-state operation.

(3) Green: storage reservoir I.

(4) Blue: storage reservoir II.

There are two solenoid valves at either end of the system which are held open when power is supplied through the switch marked "Control". These valves close and an alarm bell sounds if the power fails or if the pressure at the thermocouple just preceding the small pumps rises above a predetermined value (the sensitrol controls the pressure sensitivity). The solenoid valves are closed and the alarm bell rung by pressing the "test" button.

In using the system, the operation is divided into several periods:

(1) The initial setup period is concerned with pumping down the system (exclusive of the storage reservoirs) to a reasonable pressure (of the order of 100 μ). The auxiliary pump is used in this period.

(2) During the steady-state operation helium is being circulated through the cyclotron from one of the storage units.

(3) The shutdown period involves pumping all the helium back into the storage unit and securing the system.

(4) Emergency conditions may be predicted for a few cases.

Initial Setup

The system must be pumped down to about 100 μ and the traps filled with liquid nitrogen before any connections can be made to the cyclotron.

The first step is to start the 100-CFM Kinney pump, making certain that the exhaust line is disconnected from the system and open to air. After the fore pressure has dropped to 10 or 20 μ (usually one or two minutes), the exhaust line may be connected to the gas-recovery system, and evacuated with the auxiliary pump. (Frequently the Kinney pump will be found operating with its exhaust line already evacuated, in which case the foregoing steps should be ignored.)

The main power switch to the system should be closed and the control switch closed. (The solenoids may not open if there is vacuum on either side of the valves.) The sensitrol index on the right-hand side should be moved counterclockwise so that the high pressure present during pump-down will not close the solenoids. The traps should be evacuated by the auxiliary pump, after the pressure in the exhaust line of the 100-CFM Kinney has reached 100 μ or less. The pressure may rise when the traps are first placed on the pump, and not until after the pressure has fallen below 100 μ should liquid nitrogen be added to one of the parallel traps and the traps in the cyclotron filament supply line. The traps not in use should be isolated from the pump by closing both red valves. About 30 minutes should be allowed for the traps to reach thermal equilibrium.

The filament probe line should be connected next. This line can normally be evacuated by the cyclotron pumps. The 100-CFM Kinney should now back up the diffusion pumps and all other finishing pumps should be

isolated from the finishing header. (This should not be done until all locks, etc., have been pumped out and actual operation is ready to begin.)

At this stage the 100-CFM Kinney alone is on the finishing header and its exhaust line is being pumped on by the auxiliary pump in the recovery system. The line from the needle valve to the cyclotron is open and evacuated (by the cyclotron pumps). Now the following steps are taken:

(1) The right-hand index of the sensitrol is set to the predetermined point as noted on the system.

(2) All lines to the auxiliary pump are isolated by the double set of valves.

(3) One of the two purifying traps is opened to the rest of the system.

(4) The appropriate Kinney pump is started and the valve at its intake side opened. (The pump should be rotated a few times by hand before it is started.)

(5) The valves at the exhaust side of the appropriate Kinney are opened (except the needle valve). The storage cylinders are left isolated.

(6) The needle valve is opened slowly and adjusted until the proper gas flow, as read by the control room meter, is reached.

(7) The readings of the various thermocouple gauges and the large vacuum gauge are noted when steady state conditions are reached.

(8) The traps must be filled every half hour.

If the pressure readings of any of the gauges start to rise, it is probable that the charcoal purifying trap has become saturated and it is necessary to change to the parallel trap. The procedure to follow in this case is:

(1) The second trap should be at low pressure, having been evacuated before the run, and in thermal equilibrium with the liquid nitrogen.

(2) The helium in the saturated trap should be pumped out by closing the fore valve.

(3) The saturated trap should be isolated from the system and the new trap connected. Care must be taken that the lines containing helium are never opened to the auxiliary pump.

(4) The saturated trap should now be pumped on with the auxiliary pump to prevent a large pressure from developing as the trapped gases are evolved.

Close-down

It will take about one hour to secure the system before the normal cyclotron pumps can be put back on the finishing header. The steps to be taken in securing the system are:

(1) The valve at the exhaust end of the 2-CFM Kinney being used should be closed to stop the flow of helium into the cyclotron.

(2) The needle valve should then be opened wide.

(3) The helium should be pumped into the storage line (the exhaust line of the 2-CFM Kinney) until as much as is practical has been recovered. Usually the gas pressure at the filament probe will drop to 20 or 30 μ and the pressure just behind the purifying trap will drop to 10 μ or less.

The pressure in the exhaust line of the 2-CFM Kinney must not be allowed to go above atmospheric pressure (0 on the gauge) or the gauge will be damaged. If extra gas has been added to the system so as to increase the gas flow, care must be taken at this step to equalize the pressure between the storage tanks and the small line if the gauge reading nears zero.

(4) The valve at the intake side of the 2-CFM Kinney should be closed, isolating the pump from the system, and the pump shut off. The pressure

on the vacuum gauge should be noted to ascertain any losses.

(5) The auxiliary pump valves should now be opened to pump on all traps and the exhaust line of the 100-CFM Kinney, and the normal cyclotron pumping procedures resumed.

(6) Within the next few days the heater should be placed around each trap in turn and the traps pumped out one at a time at high (180°C) temperature. The heater has a thermostat which normally will be set to keep the temperature in the desired range. The regenerating process takes a few hours after the traps have reached the desired temperature. (The pressure at the auxiliary pump will rise as heat is applied and slowly fall to the base pressure of the pump as all the gases are evolved.)

(7) The system should then be secured, with all traps evacuated and sealed off. The 100-CFM Kinney may be left operating with its exhaust line being pumped on by the auxiliary pump.

Special Precautions and Emergencies

(1) As was noted in the preceding sections, it is not wise to heat the charcoal traps unless they are being vented to air.

(2) In using the system it is necessary to rotate the 2-CFM Kinney pumps several times by hand before they are turned on. This clears the oil to the rear chamber and prevents the pumps' throwing oil into the exhaust lines and vacuum gauges.

(3) The pressure recorded by the gauges should be noted at periodic intervals, when the system is not in use. Any steady increase in pressure will indicate a leak in the storage portion of the system. Steps must then be taken to clear the pump and exhaust lines of gas until the leak

can be located and repaired. Failure to do this can result in a serious loss of gas by diffusion after the gas in the lines reaches atmospheric pressure.

(4) In the event of a sudden leak in the cyclotron, which causes the alarm bell to ring and the solenoid valves to close, the system should be isolated at once by closing the valves just inside the solenoid valves. The needle valve and the valve at the exhaust line of the small Kinney pump should be closed. This will leave some gas in the trap and lines between the exhaust side of the Kinney and the solenoid valve. If the trouble is minor and quickly repaired, steady operation can be resumed and this gas presents no problem. If it is necessary to secure the system, however, then this gas should be pumped into the ordinary storage portion of the system. This can be done by connecting the filament probe lead on the system to the lead which ordinarily takes the exhaust of the 100-CFM Kinney and then pumping with the 2-CFM Kinney to pull the gas into the storage unit. The gas which is in the cyclotron, pumps, etc., is lost in this case. The system should then be secured as above.

(5) If in the initial setup it is not possible to evacuate the exhuast side of the 100-CFM Kinney to 100 μ, it is probable that a leak has developed in the shaft seal. The inspection technicians should be contacted. They have spare seals which can be installed within one or two hours with the pump in position. Attempts to operate the gas-recovery system with leaks in the shaft seal may lead to abnormal losses of helium.

(6) If the pressure in the exhaust line of the 2-CFM Kinney drops too low owing to loss of gas during successive operations, it may be necessary to raise the pressure by momentarily opening the <u>appropriate</u> storage

tank to the exhaust line. The storage tank should not be open during ordinary operation of the unit. This is an extremely important safety procedure which avoids the loss of the majority of the gas if an accident should open the rest of the system to air.

(7) The pressure in the lines containing the vacuum gauges must never be permitted to go above atmospheric pressure (0 on the gauge).

Information Division
10/9/53 plc

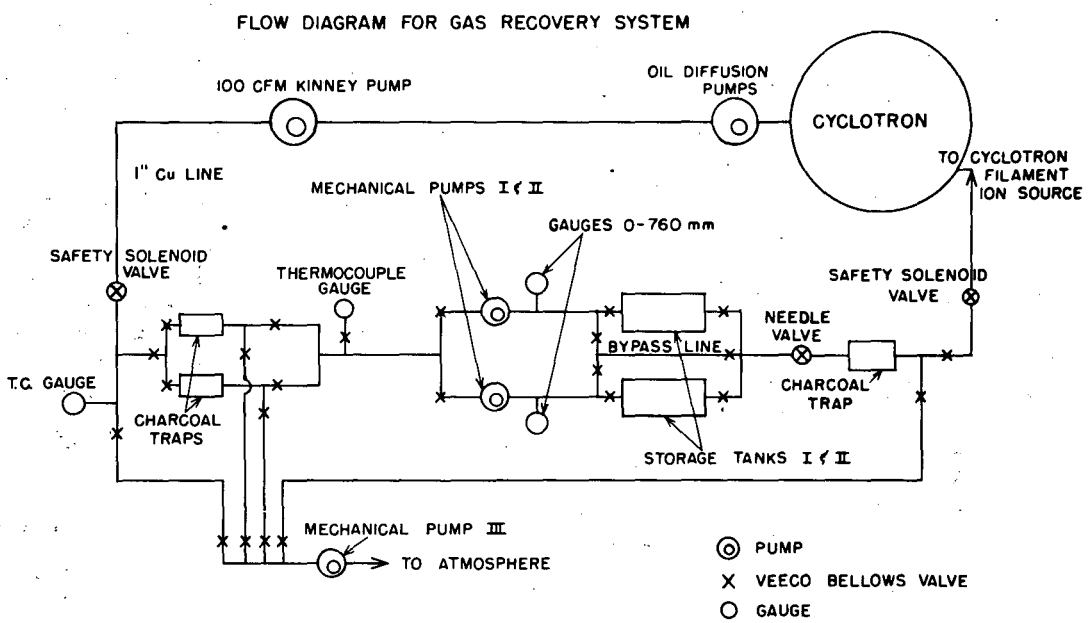

FIG. 1

Fig. 1 - Flow Diagram for Gas Recovery System

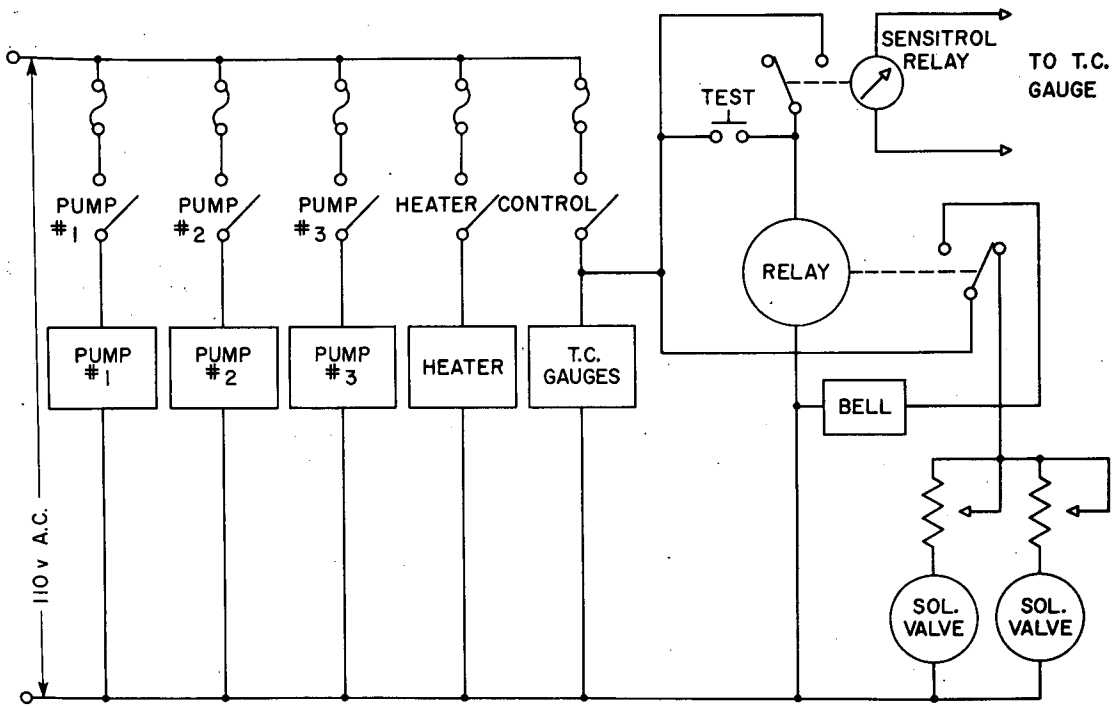

SCHEMATIC WIRING DIAGRAM FOR GAS RECOVERY SYSTEM

Fig. 2 - Schematic Wiring Diagram for Gas-Recovery system.