UCRL 2352

UNCLASSIFIED

UNIVERSITY OF CALIFORNIA

Radiation Laboratory

BERKELEY, CALIFORNIA

DISCLAIMER

This document was prepared as an account of work sponsored by the United States Government. While this document is believed to contain correct information, neither the United States Government nor any agency thereof, nor the Regents of the University of California, nor any of their employees, makes any warranty, express or implied, or assumes any legal responsibility for the accuracy, completeness, or usefulness of any information, apparatus, product, or process disclosed, or represents that its use would not infringe privately owned rights. Reference herein to any specific commercial product, process, or service by its trade name, trademark, manufacturer, or otherwise, does not necessarily constitute or imply its endorsement, recommendation, or favoring by the United States Government or any agency thereof, or the Regents of the University of California. The views and opinions of authors expressed herein do not necessarily state or reflect those of the United States Government or any agency thereof or the Regents of the University of California.

UCRL-2357
Unclassified - Instrumentation Distribution

UNIVERSITY OF CALIFORNIA
Radiation Laboratory

Contract No. W-7405-eng-48

FAST-NEUTRON SCINTILLATION SURVEY METER

B. W. Thompson

October 28, 1953

Berkeley, California

FAST-NEUTRON SCINTILLATION SURVEY METER

B. W. Thompson

Radiation Laboratory, Department of Physics
University of California, Berkeley, California

October 28, 1953

ABSTRACT

To estimate the radiation damage caused by fast neutrons, a scintillation survey meter has been developed. The instrument measures energy flux density making it necessary to know the neutron distribution approximately. The instrument gives a sizable response at low flux levels, possesses good gamma discrimation, and is nondirectional.

FAST-NEUTRON SCINTILLATION SURVEY METER

B. W. Thompson

Radiation Laboratory, Department of Physics
University of California, Berkeley, California

October 28, 1953

Estimating the radiation hazard contributed by fast neutrons presents certain difficulties. The permissible flux is very low and the methods of detection are inefficient, as they depend upon nuclear cross sections. Gamma rays are usually present in neutron fields and must be either accounted for or excluded from detection. In addition, measured fluxes are difficult to interpret in terms of biological damage. An approach to the problem is the proton-recoil scintillation counter described below (Fig. 1).[1] It is a highly sensitive instrument with good discrimination against gamma detection, and gives a sizable response even at tolerance flux levels.

Energy Flux Density

An attempt is made to estimate the biological damage caused by a neutron flux by measuring the energy flux density, which we define as the product of the number of neutrons and their energy integrated over the appropriate spectrum. This approximation to the radiation hazard is used chiefly because it is readily measurable, especially in low-level neutron fields. From a biologist's viewpoint, measurements of other physical factors[2] are more desirable, but inherent features of fast-neutron counting preclude or make difficult these measurements at tolerance levels.

Counter Theory

In a proton-recoil counter, if the range of the most energetic recoil is less than the thickness of the radiator, then the efficiency is approximately proportional to the neutron energy. Mather[3], using this principle, developed a proportional counter and a technique to estimate the energy flux density.

Calculations of recoil counter efficiencies under various physical conditions and requirements are familiar[1, 4, 5]. In particular, it is shown in reference (1) that an isotropic neutron flux, homogeneous in energy at E, irradiating a thick hydrogenous slab will cause the following number of recoil protons to emerge from one face of area A in unit time:

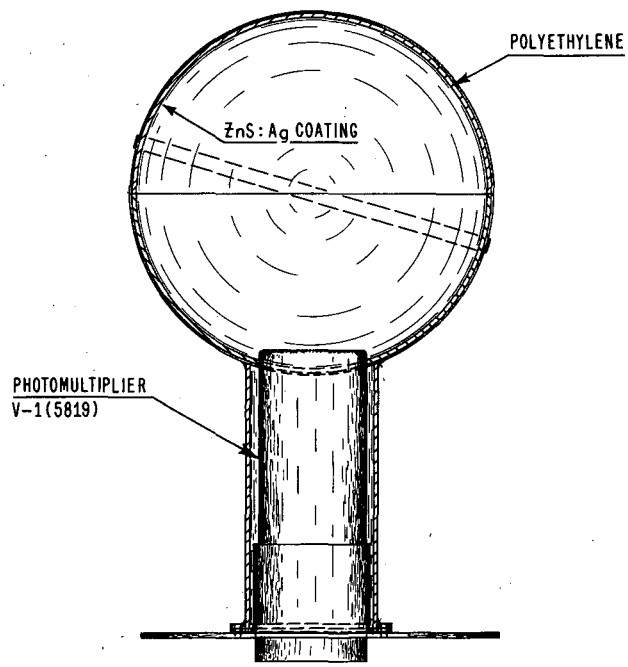

PORTABLE FAST NEUTRON SCINTILLATION SURVEY METER SPHERE ASSEMBLY.

MU-6687

Fig. 1

$$F(E) = \frac{1}{10} N_H A \phi(E) \sigma_{np}(E) R(E) ; \quad (1)$$

where: $\phi(E)$ is neutron flux density

$\sigma_{np}(E)$ is the n - p scattering cross section

$R(E)$ is the range of a recoil proton of energy E in the slab material.

N_H = number of hydrogen nuclei/cm^3.

In the derivation of Eq. (1) it has been assumed that $R(E) = \text{const. } E^{3/2}$, that the slab thickness is greater than R(E), that n - p collisions are the origin of all emerging protons, and that these collisions display spherical symmetry in their center-of-mass reference frame.

Over a considerable interval in energy, the product $\sigma_{np}(E)R(E)$ is very nearly proportional to E. In fact between 0.1 Mev and 20 Mev the relation

$$\sigma R = (1.0 \times 10^{-26}) E, \quad (2)$$

with E in Mev and σR in cm^3 (evaluated for CH_2) is nowhere in error by more than 15 percent, and over most of the region is much closer than this. Thus if all emerging protons were detectable the efficiency of the counter would be approximately proportional to neutron energy, thus:

$$\epsilon(E) = \frac{F(E)}{\phi(E)} = (1.0 \times 10^{-27}) N_H A E \ cm^2 \quad (3)$$

Moreover, for neutrons not homogeneous in energy, the number of protons emerging per second, i.e., the counting rate if all protons were detectable, would be:

$$C = \frac{1}{10} N_H A \int_{E_{min}}^{E_{max}} \phi(E) \sigma_{np}(E) R(E) \, dE,$$

where $\phi(E)$ now denotes neutron flux density within unit energy interval at E. In view of relation (2) this is approximately:

$$C = (1.0 \times 10^{-27}) N_H A \int_{E_{min}}^{E_{max}} \phi(E) E \, dE \quad (4)$$

Thus, the counting rate C in counts/sec is approximately proportional to the energy flux density delivered by fast neutrons, here measured in units of Mev/cm^2 sec.

The foregoing simplified picture must be modified by the fact that not all proton recoils are detectable above the bias level, which is set instrumentally to reject Compton electrons. Because of this, the simple proportionality demonstrated above begins to break down for decreasing neutron energies, usually at about 0.5 Mev (depending of course upon the actual bias adjustment). In Fig. 2 is plotted the calculated efficiency vs. neutron energy for the cases of zero bias and 0.2 Mev bias (i.e., an ionizing particle must in the latter case emerge from the slab with 0.2 Mev residual energy in order to be counted). Typically, the bias adjustment will be set within these limits, and for the scintillation instrument described below the bias energy can be considerably less than 0.2 Mev if gamma-radiation levels are not too high.

Admittedly, the energy flux density delivered by fast neutrons is not precisely the most desirable physical quantity from which to interpret the biological hazard. But if the mean energy, $\bar{E}$, of the neutrons is known, or can be estimated, it is possible to immediately infer the numerical flux density of the fast neutrons by:

$$\phi_{total} = \int \phi(E)\, dE = \frac{1}{\bar{E}} \int \phi(E)\, E\, dE;$$

or, in view of relation (4):

$$\phi_{total} = \frac{C}{(1.0 \times 10^{-27})\ N_H\ A\ \bar{E}} \qquad \ldots\ldots\ldots\ldots\ldots \qquad (5)$$

Precise evaluation of $\bar{E}$ demands, of course, knowledge of the neutron spectrum in the region under survey. This is difficult to obtain with neutron field intensities as low as the order of tolerance levels. Nevertheless, estimates of $\bar{E}$ are possible by considering the character of the original neutron emission (i.e., line spectrum, fission spectrum, evaporation spectrum, et cetera), and the moderating effects of shielding. Rough experimental estimates of $\bar{E}$ can be obtained from paraffin moderation tests employing a thermal detector.

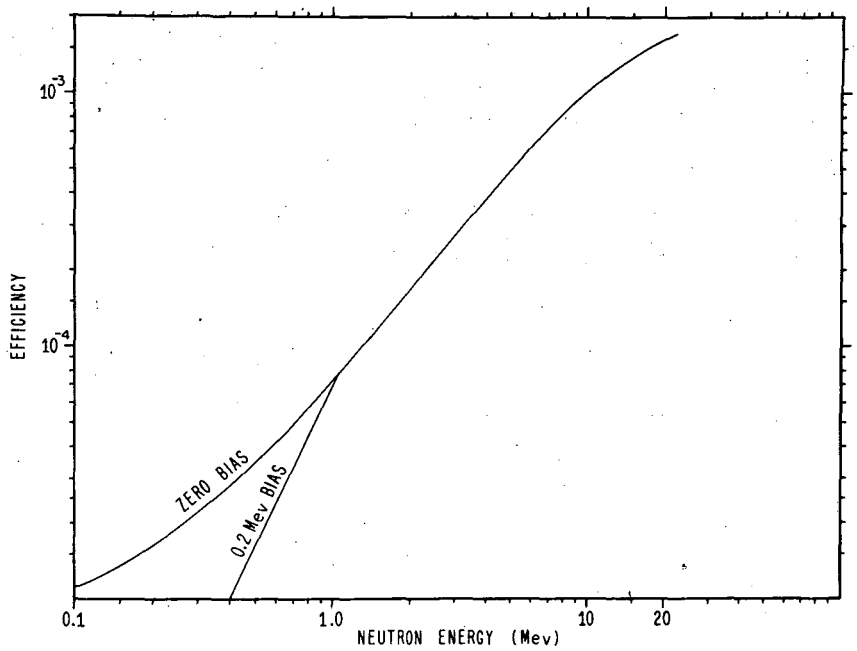

EFFICIENCY OF PROTON RECOIL COUNTERS. MU-6686

Fig. 2

The instrument here described is useful because of its sensitivity and its selective response to fast neutrons. Its utility in inferring flux densities or biological hazards is only as good as the ability of the operator to estimate the mean energy of the neutrons or to interpret the biological effects from energy delivered across the surface of a medium by fast neutrons of unknown spectrum. It has, however, proved to be very useful in fields near tolerance intensities where a rough estimate of $\bar{E}$ could also be made.

Counter Construction

A sphere is chosen as the geometry best suited for measuring fluxes of unknown direction. Two hollow hemispheres are formed from hydrogeneous material (polyethylene), coated on the inside with a suitable phosphor, and then joined together to form a sphere. The neutron-induced proton recoils produce scintillations in the phosphor, which are viewed with a photomultiplier through an aperture. The thickness of hydrogeneous material can be chosen with respect to the energy interval of interest. It is convenient to have the thickness greater than the range of the highest-energy recoil proton, providing neutron energies do not extend too high. To cover an energy interval from 0.1 to 20 Mev, one-eighth inch is quite satisfactory.[1]

Forming the polyethylene into hemispheres can be done readily by molding from sheet stock. An experimental model seven inches in diameter with a one-eighth-inch wall thickness was made from a sheet of one-fourth-inch-polyethylene nine and a half inches in diameter. The mold and plastic were preheated to 135°C, assembled, and pressed out. The mold was lightly coated with silicon grease to prevent sticking.

The two spheres are cleaned and coated with a thin layer of ZnS:Ag (RCA phosphor 33Z20A). A Paasche air brush is used to spray the mixture of absolute alcohol, duco cement and the phosphor. The ratios are not critical, but a workable mixture is 1.5 grams duco to 100 grams alcohol. Then to 17 grams of the above mixture, 75 grams of ZnS:Ag is added. The phosphor is kept in suspension by shaking the air brush slightly while spraying. It is well to use a large ratio of liquid to air to insure wetting and sticking. The amount of phosphor is not critical, as shown by Figure 3, which indicates the variation of sensitivity with gammas and neutrons. Eighteen to 22 mg/cm^2 is an average coating thickness for maximum sensitivity. The neutron flux levels to be measured determine the size of the sphere. Because of the natural diffusing surface of the ZnS:Ag,

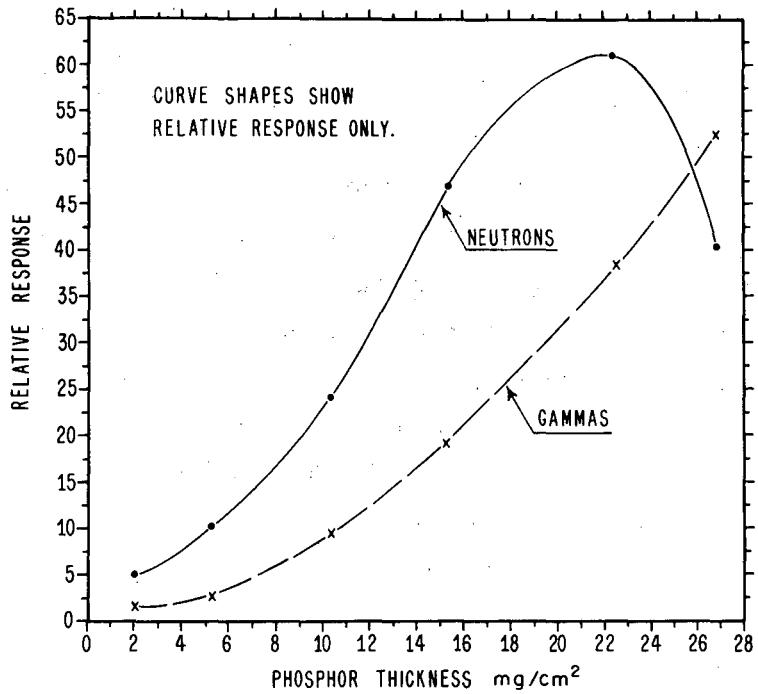

PHOSPHOR SENSITIVITY.

MU-6684

Fig. 3

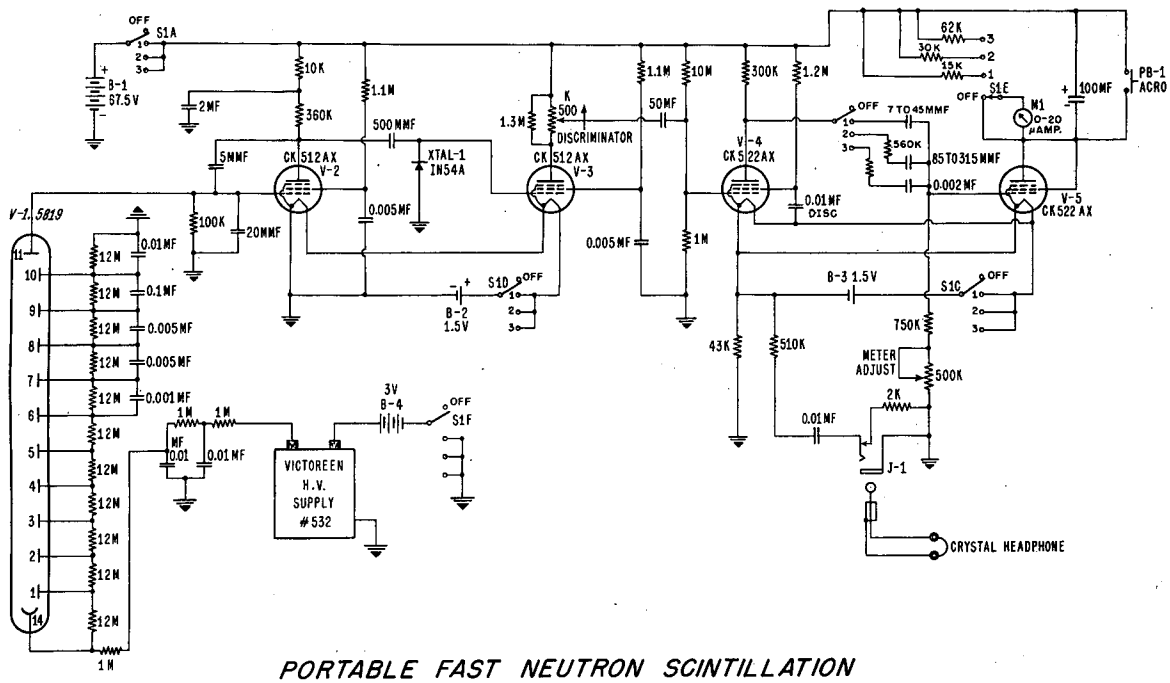

PORTABLE FAST NEUTRON SCINTILLATION SURVEY METER.

MU-6682

Fig. 4

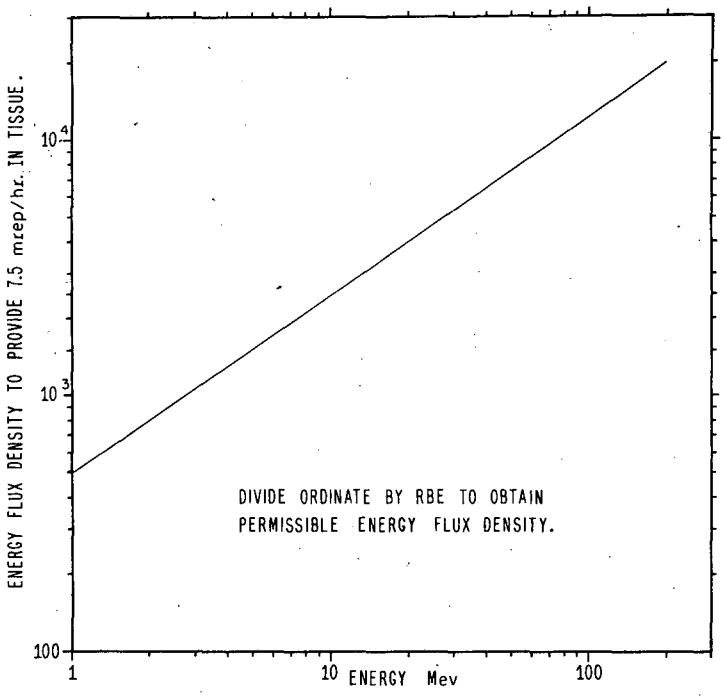

PERMISSIBLE ENERGY FLUX DENSITY.

MU-6685

Fig. 5

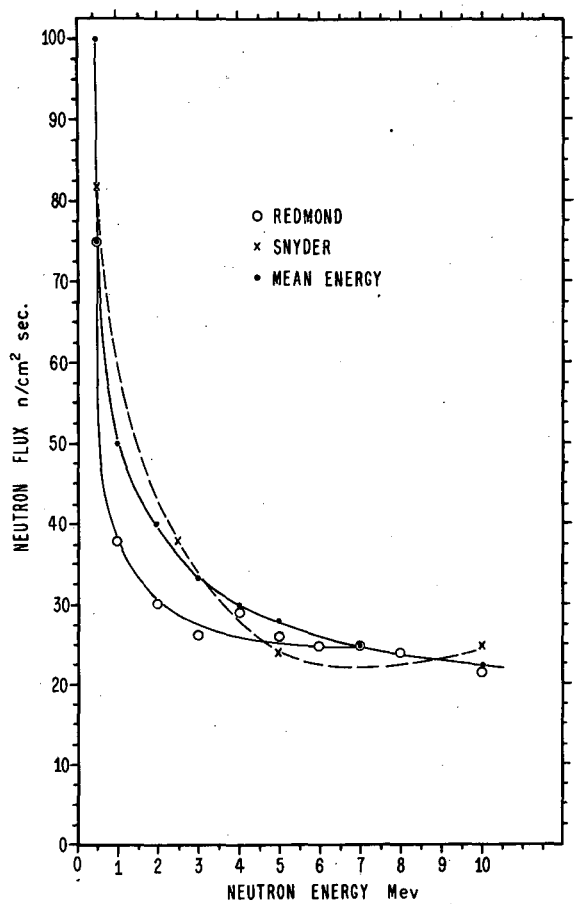

PERMISSIBLE NEUTRON FLUX.

MU-6683

Fig. 6

little loss of light occurs as the size of the sphere is increased. The diffusing surface also makes the counter equally sensitive around its periphery with the exception of the photomultiplier aperture. With the present RBE and low fast-neutron tolerance, it is desirable to have a highly efficient counter while still keeping it practical and portable. Using count-rate circuitry, a lower limit of a few counts per second can be read with accuracy. A practical design is to have a 5 per sec counting rate equal to the minimum neutron flux tolerance.

If this minimum for full scale on the most sensitive range is approximately 100 Mev/cm^2-sec then using equation (4)

$$C = K \int \phi(E)\, E\, dE$$

and recalling $K = N_H\, A\, \sigma_{np}\, (E)\, R\, (E)$,

and substituting numerical values, one finds 15 cm as the approximate diameter of the sphere if all the protons are counted and there is no aperture. Actually about 70 percent of the protons register counts and the opening for the photomultiplier is 20 cm^2. Allowing for these losses the sphere should be about 17 cm in diameter.

The inside surface of the sphere is viewed with a 5819 or 6292 photomultiplier through a suitable aperture as shown in Fig. 1. The pulses are fed into a two-stage amplifier that employs a crystal limiter and a feed-back network. The pulses vary from 7 mv to 700 mv, making some form of limiter necessary. An examination of Fig. 4 shows that the pulse is not limited but that merely the undershoot is conducted away. This, in effect, prevents saturation by eliminating the overshoot.

From the amplifier the selected pulse amplitude triggers a univibrator[6]. The "discriminator" is set high enough to bias out the gamma-electron pulses while allowing most of the pulses induced by proton recoil to start the multi-vibrator action. Each time the circuit is triggered a pulse of current is put into a meter integrating circuit, which averages the pulses into a meter reading. The width of the univibrator pulse is necessarily long at low counting rates. On the most sensitive scale it is a few hundred microseconds. This actually represents the "dead time" of the counter and limits the use somewhat around a pulsed accelerator[7,8] at high radiation levels. For most practical conditions where shielding is present, and the duty cycle of the accelerator is not too short with respect to the duration of the univibrator pulse, there is very little inaccuracy in the meter's representation of the energy flux density.

Magnetic shielding of the photomultiplier is provided by making the light shield of soft iron. It is desirable to keep the weight of any portable instrument at a minimum; therefore, in cases where no magnetic fields are present (reactors, sources, et cetera) most of the light shield can be Al or very thin Cu.

Test and Calibration

Most of the proton pulses have greater amplitude than the electron pulses, but when one considers high gamma backgrounds and "pile-ups" the pulses can be equal in magnitude. The neutron sensitivity for practical purposes varies directly with the gamma sensitivity.* A compromise between desirable high efficiency and good gamma discrimination is to provide, for one calibration, bias for only the minimum expected gamma fluxes. Another discriminator setting and calibration curve would provide additional bias for higher gamma fluxes. With 100 mr/hr Ra γ's biased out and using PoBe neutrons, the counter sensitivity is approximately 15 Mev/cm^2 sec, equivalent to one count per second -- which agrees well with the calculated value.

Figure 5 represents the energy flux density at various neutron energies that will provide a dose of 300 mrep per 40-hour week in tissue. The ordinate should be divided by the RBE to obtain the permissible energy flux density. The curve is a composite of available data. Figure 6 shows the agreement with Snyder's[9] and with Redmond's[10] curves of permissible flux.

The principal features of this instrument are its high sensitivity and non-directional characteristics, allowing measurements of low neutron fluxes to be made accurately and quickly. The author wishes to thank Dwight Dixon for his helpful suggestions.

---

* This is markedly a function of the energies in both cases.

REFERENCES

1. B. J. Moyer, Nucleonics 10, No. 5, 14 (1952).
2. G. S. Hurst, RSI 22, 981 (1951).
3. R. L. Mather, Report unpublished. UCRL.
4. Rossi and Staub, Ionizaton Chambers and Counters.
5. H. H. Barschall and H. A. Bethe, RSI 18, 147 (1947).
6. L. Nierman, MDDC-725.
7. A. Brodsky, Nucleonics 10, No. 12, 36 (1952).
8. A. G. Bourquet, Nucleonics 4, No. 2, 67 (1949).
9. W. S. Snyder, Biophysics Symposium, Washington, D.C., March 1952.
10. A. H. Redmond, USNRDL-348.