UCRL 2409

UNCLASSIFIED

UNIVERSITY OF CALIFORNIA

Radiation Laboratory

TWO-WEEK LOAN COPY

This is a Library Circulating Copy which may be borrowed for two weeks. For a personal retention copy, call Tech. Info. Division, Ext. ~~5545~~ 6781

BERKELEY, CALIFORNIA

UCRL-2409 c.2

DISCLAIMER

This document was prepared as an account of work sponsored by the United States Government. While this document is believed to contain correct information, neither the United States Government nor any agency thereof, nor the Regents of the University of California, nor any of their employees, makes any warranty, express or implied, or assumes any legal responsibility for the accuracy, completeness, or usefulness of any information, apparatus, product, or process disclosed, or represents that its use would not infringe privately owned rights. Reference herein to any specific commercial product, process, or service by its trade name, trademark, manufacturer, or otherwise, does not necessarily constitute or imply its endorsement, recommendation, or favoring by the United States Government or any agency thereof, or the Regents of the University of California. The views and opinions of authors expressed herein do not necessarily state or reflect those of the United States Government or any agency thereof or the Regents of the University of California.

UCRL-2409

UNIVERSITY OF CALIFORNIA

Radiation Laboratory

Contract No. W-7405-eng-48

EDDY CURRENTS IN THE 184" CYCLOTRON DEE

D.L. Judd, S. Gasiorowicz, and E. Kelly

November 16, 1953

Berkelely, California

EDDY CURRENTS IN THE 184" CYCLOTRON DEE

D. L. Judd, S. Gasiorowicz, and E. Kelly
Radiation Laboratory, Department of Physics
University of California, Berkeley, California

November 16, 1953

Because of the novel construction of the dee for the 184" cyclotron conversion job, some concern was felt for its mechanical stability under the stress field which would be imposed on it by the establishment of a strong eddy current distribution caused by a rapid change in the strength of the field of the 184" magnet. Such rapid changes could conceivably occur in connection with power failures, or from other irregularities which might result in rapid action of regulating systems. In order to arrive at an approximate evaluation of the stress field, we have calculated the eddy current distribution in a somewhat idealized situation felt to be qualitatively similar to that of the actual geometry.

In general the current per unit area J is given by

$$\vec{J} = \frac{1}{\rho}\vec{E}$$

where ρ is the resistivity and $\vec{E}$ the electric field strength. Further

$$\vec{E} = -\frac{\partial \vec{A}}{\partial t}$$

where A is the vector potential, which contains two terms,

$$\vec{A} = \vec{A}_{ext} + \vec{A}_{eddy};$$

we assume

$$\vec{A}_{ext} = \vec{A}_{o_{ext}}(x, y, z)\,(1 - \alpha t),$$

this time dependence resulting in the establishment of a static eddy current distribution. The vector potential of the eddy currents will contain two terms,

$$\vec{A}_{eddy} = \vec{A}_{mag}(x, y, z) + \vec{\nabla} V(x, y, z)t \ ;$$

the curl of the first term will give the magnetic field of the static eddy current distribution, while the time derivative of the second term will represent the static electric field of the surface charge distribution set up by an initial transient in such a way as to prevent the eddy current from flowing normal to the surface of the conducting medium. V is the function satisfying

$$\nabla^2 V = 0$$

inside the conductor, with the boundary condition

$$\vec{\nabla} V \cdot \vec{n} \Big|_{surface} = - \frac{\partial \vec{A}_{ext}}{\partial t} \cdot \vec{n} \Big|_{surface} = \alpha \vec{A}_{o_{ext}} \cdot \vec{n} \Big|_{surface} .$$

In the present case we wish to assume that the conducting medium is a thin plane sheet, so that the boundary value problem of determing V becomes a two-dimensional one. The actual geometry consists of a nearly square dee, one edge of which lies along a diameter of the cylindrical coordinate system appropriate to the description of the cyclotron's magnetic field. We have approximated the dee shape by representing it as a rectangular sheet; the center of symmetry of the magnet has been moved away to infinity in a direction away from the dee so that it becomes a semi-infinite one with straight edges taken to lie in the y direction (Fig. 1). By inspection it is clear that $\vec{A}_{o_{ext}}$ has a component in the y direction only, and that it is a function of x and z only. The shape of the magnetic field can be further approximated

by a step function (Fig. 2) since it is felt that the errors introduced by this approximation are smaller than those arising from other approximations involving the geometry. This eliminates the z-dependence of $\vec{A}_{o_{ext}}$.

Writing

$$B_z = 0 \qquad x < 0$$

$$B_z = -B \qquad x > 0$$

we get

$$A_{o_{ext}} = \hat{\imath}_y \, f(x)$$

with

$$f(x) = BL\left(1 - \frac{x}{L}\right) \qquad x > 0$$

$$= BL \qquad x < 0$$

the arbitrary additive constant being chosen for convenience. A solution of this boundary value problem is easily obtained in terms of a series expansion, which has the attractive feature of being very rapidly convergent. The solution

$$V(x, y) = \frac{3}{4} \alpha BLy + \sum_{n=1}^{\infty} \frac{L^2 \alpha B}{\pi^2 n^2} \left(1 - (-)^n\right) \cos \frac{n\pi x}{L} \frac{\sinh \frac{n\pi y}{L}}{\cosh \frac{n\pi L'}{L}}$$

$$+ \sum_{n=0}^{\infty} - \frac{8L^2 \alpha B(-)^n}{\pi^2 (2n+1)^2} \sin \frac{(2n+1)\pi x}{2L} \frac{\sinh \frac{(2n+1)\pi y}{2L}}{\cosh \frac{(2n+1)\pi L'}{L}}$$

leads to

$$E_x = \frac{\alpha BL}{\pi^2} \sum_{n=0}^{\infty} \left\{ \frac{2}{(2n+1)^2} \sin \frac{(2n+1)\pi x}{L} \sinh \frac{(2n+1)\pi y}{L} \operatorname{sech} \frac{(2n+1)\pi L'}{L} \right.$$

$$\left. + \frac{4(-)^n}{(2n+1)^2} \cos \frac{(2n+1)\pi x}{2L} \sinh \frac{(2n+1)\pi y}{2L} \operatorname{sech} \frac{(2n+1)\pi L'}{2L} \right\}$$

$$E_y = \alpha f(x) - \frac{3}{4}\alpha BL - \frac{\alpha BL}{\pi^2} \sum_{n=0}^{\infty} \left\{ \frac{2}{(2n+1)^2} \cos \frac{(2n+1)\pi x}{L} \right.$$

$$\cosh \frac{(2n+1)\pi y}{L} \operatorname{sech} \frac{(2n+1)\pi L'}{L}$$

$$- (-)^n \frac{4}{(2n+1)^2} \sin \frac{(2n+1)\pi x}{2L} \cosh \frac{(2n+1)\pi y}{2L} \operatorname{sech} \frac{(2n+1)\pi L'}{2L} .$$

The current distribution for the case of a square "dee" ($L = L'$) was calculated and is shown in Fig. 3. The arrows indicate the direction of the current lines and the numbers adjoining each arrow give the value of

$$\mathcal{E} = \frac{\tau\,[\text{ohm}]\ |\vec{j}|\ \left[\frac{\text{amp}}{\text{meter}}\right]}{10^{-4}\,\alpha\,\left[\frac{1}{\text{sec}}\right]\ B\,[\text{gauss}]\ L\,[\text{meter}]}$$

It is of interest to see how one may guess approximate answers to relatively simple problems of this nature. By sketching a vector potential, translated downward so as to have equal areas above and below the axis, and by assuming that the ordinates represents the current flowing in the y direction across the sheet at $y = 0$, one may then sketch closed current loops which fill the sheet. A better approximation is obtained if one does not identify the vector potential with the current across $y = 0$ but realizes that since long current paths are inhibited by the resistance, there is a tendency for the current loops to be crowded away from the edge. (Cf. Fig. 4.) This was done in the present case with the results shown in Fig. 5. Although the stress fields of the two solutions will of course differ somewhat, it was found that the total force on the dee obtained by the approximate method was within 10% of that obtained from the analytical solution.

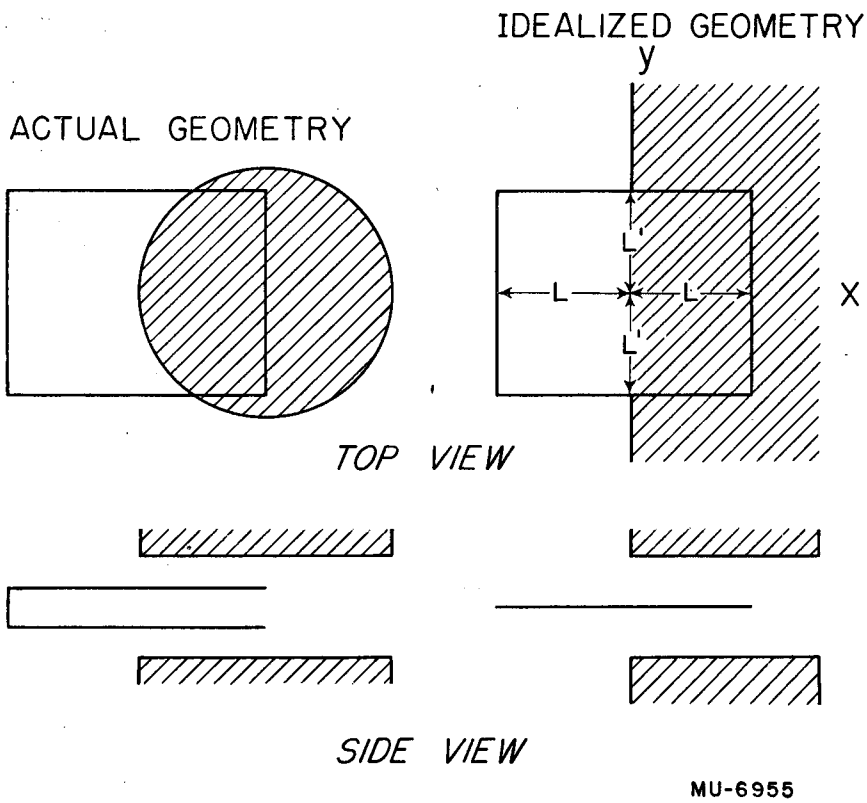
IDEALIZED GEOMETRY
y
ACTUAL GEOMETRY
L'
L
L
X
L'
TOP VIEW
SIDE VIEW
MU-6955

Fig. 1

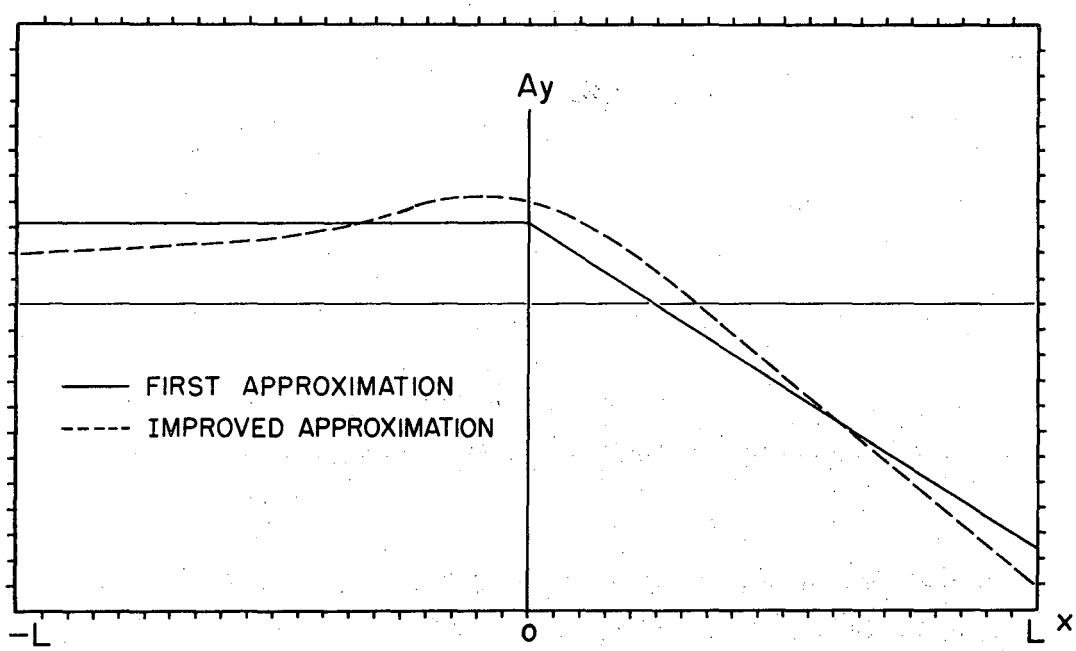

APPROXIMATE MAGNITUDE OF CURRENTS ON y=o

MU-6956

Fig. 4

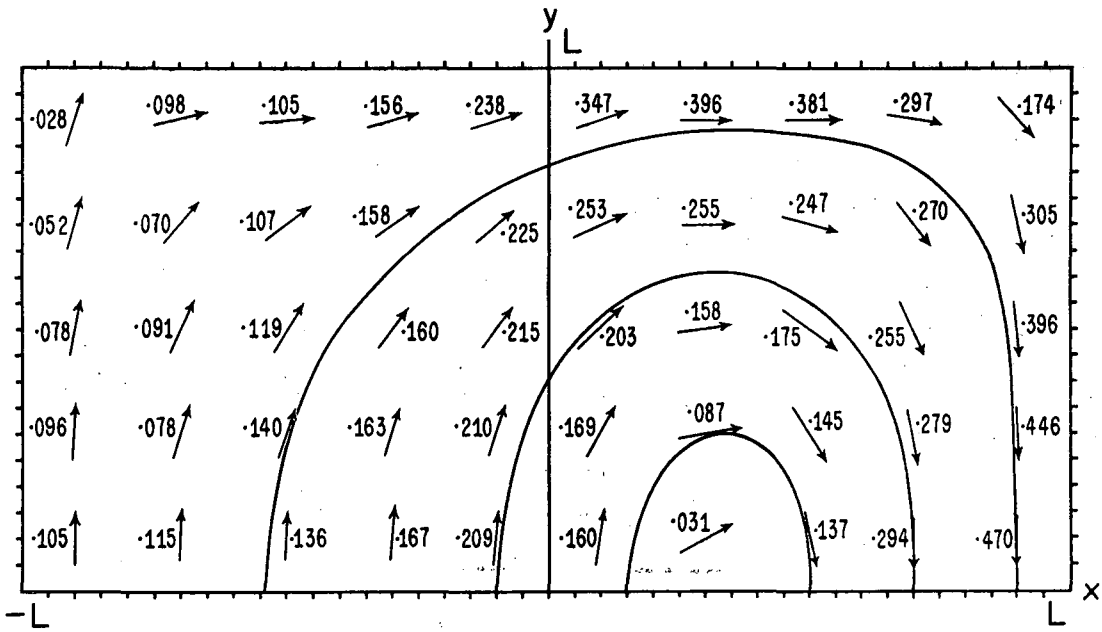

ANALYTICAL SOLUTION
(ARROWS REPRESENT CURRENT DIRECTION.)
THE LOOPS ARE DRAWN IN FOR COMPARISON WITH FIGURE 5

MU-6958

Fig. 3

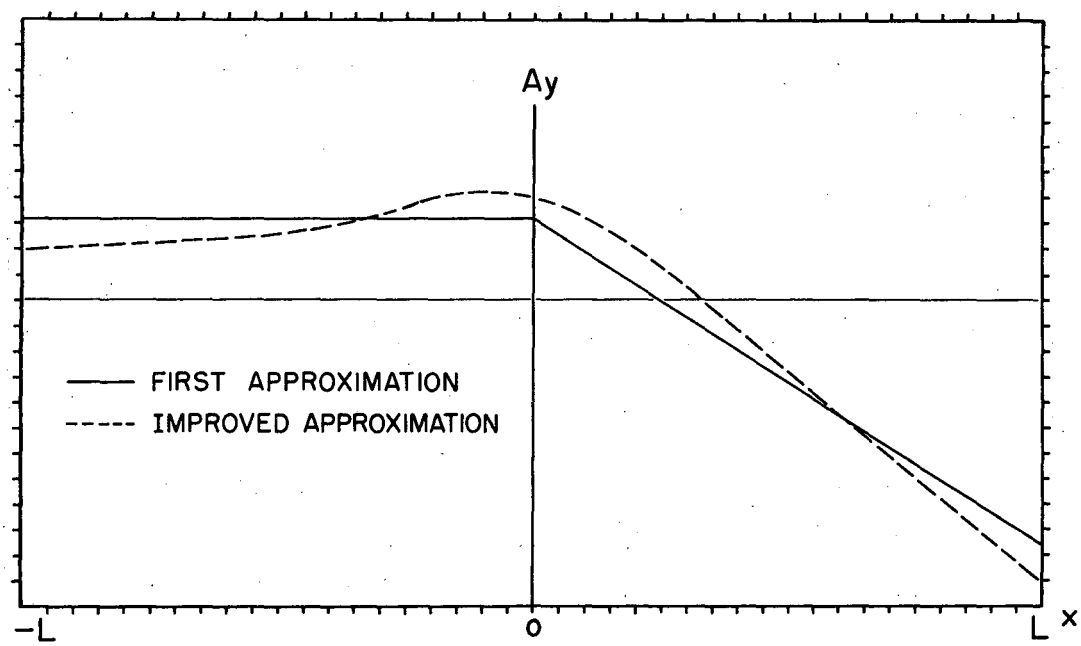

APPROXIMATE MAGNITUDE OF CURRENTS ON y=o

MU-6956

Fig. 4

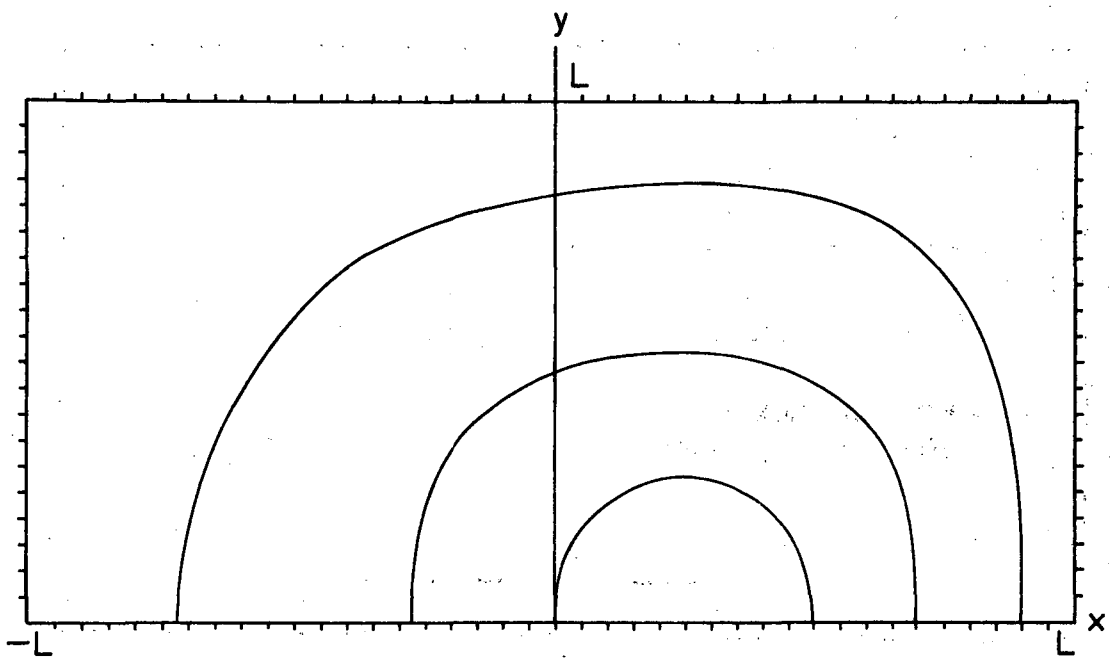

APPROXIMATE CURRENT LOOPS.

MU-6957

Fig. 5