UCRL 2422

UNIVERSITY OF CALIFORNIA

Radiation Laboratory

TWO-WEEK LOAN COPY

This is a Library Circulating Copy which may be borrowed for two weeks. For a personal retention copy, call Tech. Info. Division, Ext. 5545

BERKELEY, CALIFORNIA

DISCLAIMER

This document was prepared as an account of work sponsored by the United States Government. While this document is believed to contain correct information, neither the United States Government nor any agency thereof, nor the Regents of the University of California, nor any of their employees, makes any warranty, express or implied, or assumes any legal responsibility for the accuracy, completeness, or usefulness of any information, apparatus, product, or process disclosed, or represents that its use would not infringe privately owned rights. Reference herein to any specific commercial product, process, or service by its trade name, trademark, manufacturer, or otherwise, does not necessarily constitute or imply its endorsement, recommendation, or favoring by the United States Government or any agency thereof, or the Regents of the University of California. The views and opinions of authors expressed herein do not necessarily state or reflect those of the United States Government or any agency thereof or the Regents of the University of California.

UCRL-2422
Unclassified Physics Distribution

UNIVERSITY OF CALIFORNIA

Radiation Laboratory

Contract No. W-7405-eng-48

ANGULAR DISTRIBUTION of 30.6 MEV PROTONS ELASTICALLY SCATTERED by Be, C, and Al

Byron T. Wright

November, 1953

Berkeley, California

ANGULAR DISTRIBUTION of 30.6 MEV PROTONS ELASTICALLY SCATTERED by Be, C, and Al

Byron T. Wright*

Radiation Laboratory, Department of Physics
University of California, Berkeley, California

November, 1953

ABSTRACT

The measurements extend from about 11° to 150° for each element. In a plot of $R = \sigma$ (observed) / σ(Rutherford) vs. θ the characteristic maxima and minima are present. R reaches 50 at 33° in Be, 35 at 80° in C, 8.5 at 60° in Al. Between 120° and 150° the mean differential cross sections are 0.5 ± 0.1, 0.95 ± 0.15, and 0.85 ± 1.15 millibarns for Be, C, and Al respectively.

* On leave from the University of California, Department of Physics, Los Angeles, California

ANGULAR DISTRIBUTION of 30.6 MEV PROTONS ELASTICALLY SCATTERED by Be, C, and Al

Byron T. Wright
Radiation Laboratory, Department of Physics
University of California, Berkeley, California
November, 1953

INTRODUCTION

The motivation for the measurement of the angular distribution of elastic scattering of medium energy protons and neutrons has been clearly presented by Cohen and Neidigh.[1] They have also listed the results obtained prior to their experiments, with the exception of a few observations of Britten[2] and Levinthal, Martinelli, and Silverman[3] at 31.5 Mev. This is a report on some results obtained with 30.6 Mev protons scattered from Be, C, and Al.

EXPERIMENTAL METHOD

The beam from the Berkeley linear accelerator[4] was bent through an angle of 20° by a steering magnet, passed through a 24 inch diameter scattering chamber, and then into a Faraday cup in another chamber. The beam was collimated by 1/8 inch diameter apertures five feet apart. Its cross section at the point at which it struck the scattering foils at the center of the chamber was about 3/16 inch. A gross collimator prevented slit-scattered protons from striking the foil holder.

The energy of the beam was determined by taking an integral range in Al curve in the following manner. Integration of the total beam passing through the chamber was accomplished by counting the elastically scattered protons from a gold foil. For a certain total charge through the chamber, the amount collected in the Faraday cup F, Fig. 1, was determined as a function of the thickness of stopping material on the remotely operated wheel W. Most of the energy loss took place in the plate P (thickness 1025 mg cm^{-2}). Since this plate was within one inch of the Faraday cup, loss of particles due to multiple scattering was practically eliminated. Plate P was operated at + 200 volts, since auxiliary

experiments show that a plateau exists in the charge collected vs. bias curve between + 100 and + 350 volts.

If we look upon the difference between the curves of Smith[5] and the results of Hubbard and MacKenzie[6] as an uncertainty in the range of energy relation, and take into account several possible sources of error in the measurement, we obtain a result of 30.6 ± 0.4 Mev for the energy linear accelerator beam for the conditions present during this experiment. The observed straggling indicates that the total spread of energy at the half-maximum intensity is less than 0.3 Mev.

Figure 1 is a line diagram of the scattering chamber and the integrating chamber. The detector for the elastically scattered protons was a stilbene crystal mounted on a type 5819 photomultiplier tube. The azimuthal position of both target and detector was remotely controlled. For each element for angles of scattering less than 30°, ϕ was set at 90°, and the scattering was observed on both sides of the beam. For larger angles, ϕ was set at 45°, and the observations were made on only one side of the beam. Background runs with the target foil removed, which were made at the smallest and largest angle of scattering, gave negligible counting rates in the vicinity of the elastic peak.

The aperture defining the scattering angle was 0.250 inches in diameter and was at a distance of 8.28 inches from the center of the area at which the beam struck the target. A tube with 5/8 inch inside diameter and 3-1/2 inches long, placed adjacent to the defining aperture, was used to prevent particles scattered from the gross collimator from entering the defining aperture.

As a result of the finite size of the beam spot on the target, and the size of the defining aperture, a 3° range of scattering angles was accepted for small angles of scattering, and a maximum of angular range of 3.6° was accepted for scattering angles greater than 30°.

A 12 mm cube of stilbene was cemented onto the type 5819 photomultiplier with a cement polystyrene dissolved in xylene. A hemispherical dome, chromium plated and polished, was placed over the crystal. A record on the film was made of the deflection on an oscilloscope due to the pulses caused by 30.6 Mev protons elastically scattered at a small angle by a thin gold foil. The histogram of the resulting pulse height distribution had a full width at half-maximum intensity of 4.5 percent.

The data for the scattering from Be, C, and Al were taken electroni-

cally. Eight scales were set at differing discriminator levels to form a seven channel pulse height analyzer with two volt windows for pulses in the neighborhood of 70 volts. A typical histogram for small angle elastic scattering is shown to the left in Fig. 2. The resolution as judged from these histograms was 6-7%. For each observation, a pulse height analysis of this kind was made, and the inelastic events were thus separated from the elastic events (subject to the limitations of resolution mentioned above). For example, those inelastic events due to the level in Be^9 at 2.4 Mev were resolved to the extent shown in the right hand histogram in Fig. 2.

The Be target was a three mil sheet whose surface density was 11.0 mg cm^{-2}. The C target for angles greater than 30° was a polyethylene foil of surface density of 9.39 mg cm^{-2}. Protons scattered from H would be cleanly resolved. At 30° a comparison was made of the counting rates from the polyethylene foil and a piece of graphite which was ground to a thickness of approximately five mils. The graphite was then used for measurements at smaller angles. The graphite was too non-uniform to allow its direct use for an absolute cross section determination. The Al target was a foil of thickness 3.50 mg cm^{-2}.

RESULTS AND DISCUSSION

The absolute differential cross section for the elastic scattering of 30.6 Mev (lab) protons from Be, C, and Al are given in Table 1. In Figs. 4, 5, and 6 the data are plotted as the ratio of the observed to Rutherford cross sections vs. the center of mass angle of scattering.

Of the various sources of uncertainty in the above results i.e. the collected charge, the foil surface density, the foil composition, the geometry, the background counting rate, the statistics of counting, and the determination of the proper separation between the elastic and inelastic events; the last two mentioned are by far the most important. From the histograms, such as those of Fig. 2, an estimate of the uncertainty in the separation of elastic from inelastic events was made. This estimate, combined with the total number of counts in the elastic peak, forms the basis for the uncertainties indicated for a number of points on each of the curves in Figs. 3, 4, and 5. The combined estimated uncertainty (probable error) ranges from 8% at small angles to 18% at some of the

largest angles of scattering.

For Be, the present results are in agreement with some results of J. Benveniste[7] at angles (c.m.) of 33°, 96°, and 140°. These points are shown in Fig. 3. The results of Britten[2] are uniformly lower than the present results for each element, but the two sets of data are within reach of one another on a probable error basis. Benveniste[7] has results which indicate for Be, σ (elastic scattering) / σ (deuteron) is 57 at 16.7 (c.m.) and is 90 at 33°, so the contribution of deuterons in the low angle peak is negligible. At larger angles the deuterons are resolved from the elastic proton peak.

For Al the present results agree with a point due to Levinthal, Martinelli, and Silverman[3] at 98°. Since there is an unresolved inelastic level in the case of Al[7], for this element the quoted elastic cross sections and the plotted ratios to Rutherford scattering must be regarded as upper limits to the actual values.

It is a pleasure to thank Professor Ernest Lawrence for making the facilities of the Radiation Laboratory available for these experiments. My thanks are also due Mr. Vern Ogren for his generous aid with electronic problems, and to Mr. Wendell Olsen and the Linear Accelerator crew for their assistance with equipment set-ups and the bombardments.

TABLE 1

Be			C			Al		
θ_{lab} deg.	$\theta'_{c.m.}$ deg.	$(\frac{d\sigma}{d\Omega})_{c.m.}$ mb.	θ_{lab} deg.	$\theta'_{c.m.}$ deg.	$(\frac{d\sigma}{d\Omega})_{c.m.}$ mb.	θ_{lab} deg.	$\theta'_{c.m.}$ deg.	$(\frac{d\sigma}{d\Omega})_{c.m.}$ mb.
10.0	11.1	746	10.0	10.8	1030	10.0	10.4	3570
15.0	16.7	644	12.5	13.5	856	15.0	15.5	1650
20.0	22.2	507	15.0	16.2	736	20.0	20.7	900
25.0	27.7	353	17.5	18.9	708	25.0	25.9	400
30.0	33.2	197	20.0	21.6	588	30.0	31.1	140
35.0	38.7	100	22.5	24.3	488	35.0	36.2	43
40.0	44.1	52	25.0	27.0	403	40.0	41.4	31
45.0	49.5	24	27.5	29.7	311	45.0	46.5	42
50.0	54.9	12.8	30.0	32.4	244	50.0	51.6	50
55.0	60.2	7.4	32.5	35.1	172	55.0	56.7	41
60.0	65.5	6.6	35.0	37.7	136	60.0	61.8	31
65.0	70.8	7.0	37.5	40.4	99	65.0	66.9	19
70.0	76.0	6.1	40.0	43.1	71	70.0	72.0	11
75.0	81.2	5.8	42.5	45.7	--	75.0	77.1	6.6
80.0	86.3	4.8	45.0	48.4	33	80.0	82.1	4.9
85.0	91.4	3.7	47.5	51.0	23	85.0	87.1	5.1
90.0	96.4	2.9	50.0	53.7	18	90.0	92.1	5.0
100.0	106.3	1.4	52.5	56.3	16	95.0	97.1	4.7
110.0	116.0	0.88	55.0	58.9	14	100.0	102.1	3.6
120.0	125.5	0.57	60.0	64.1	16	105.0	107.1	2.4
130.0	134.9	0.46	65.0	69.3	15	110.0	112.0	2.1
			70.0	74.5	13	115.0	116.9	1.4
			75.0	79.6	13	120.0	121.8	1.1
			80.0	84.7	10	125.0	126.7	0.87
			85.0	89.8	7.8	130.0	131.6	0.66
			90.0	94.8	5.3	135.0	136.5	0.75
			95.0	99.8	3.8	140.0	141.4	0.86
			100.0	104.7	2.7	145.0	146.2	0.78
			105.0	109.6	1.9	150.0	151.1	0.86
			110.0	114.5	1.6			
			115.0	119.3	1.3			
			120.0	124.1	0.94			
			125.0	128.9	0.91			
			130.0	133.7	0.89			
			135.0	138.4	0.80			
			140.0	143.1	0.98			
			145.0	147.7	1.1			
			150.0	152.4	0.94			
			155.0	157.0	0.87			
			160.0	161.6	0.83			
			165.0	166.2	0.55			
			170.0	170.8	0.46			

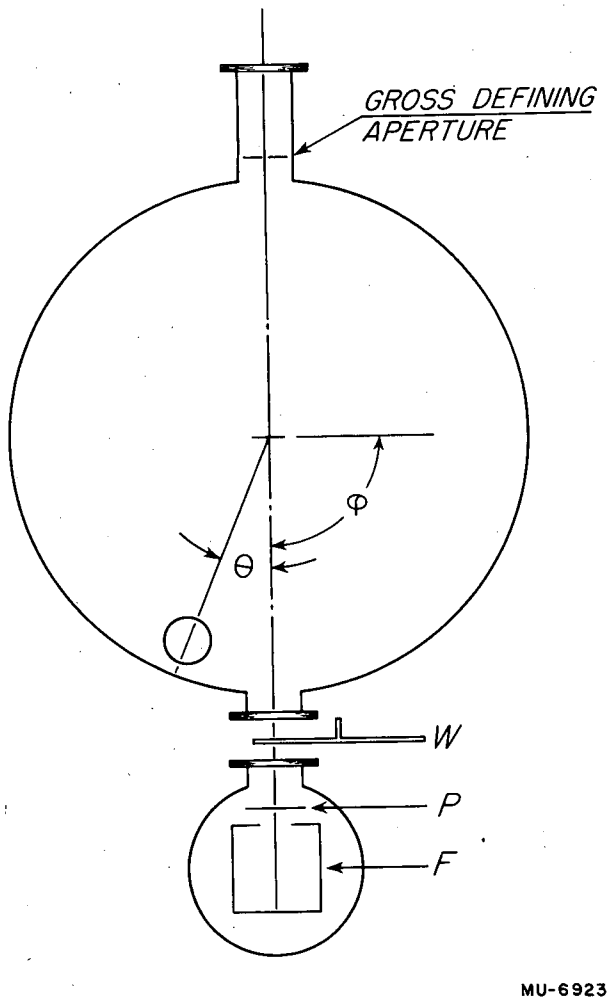

Fig. 1. **A line diagram of the scattering chamber and the Faraday** chamber, showing the foil wheel W, the plate P in which most of the beam energy is absorbed in a range measurement, the gross defining aperture, and the target azimuth angle ϕ.

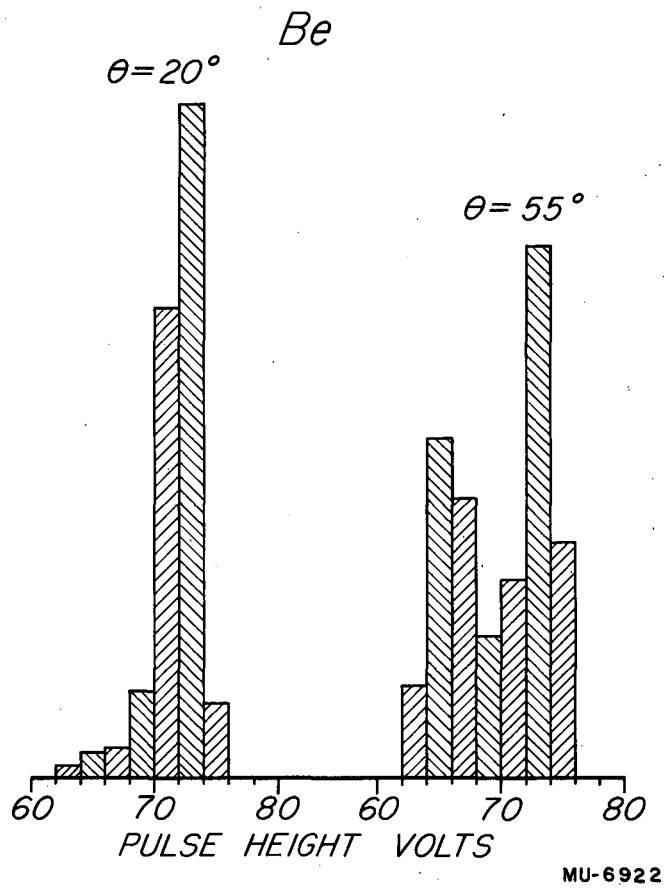

Fig. 2. Histograms constituting a pulse height analysis of the scattered protons. On the left is the case of the scattering from Be at a lab angle of 20°, and on the right at 55°. The inelastic level at 2.4 Mev causes the second peak at this angle.

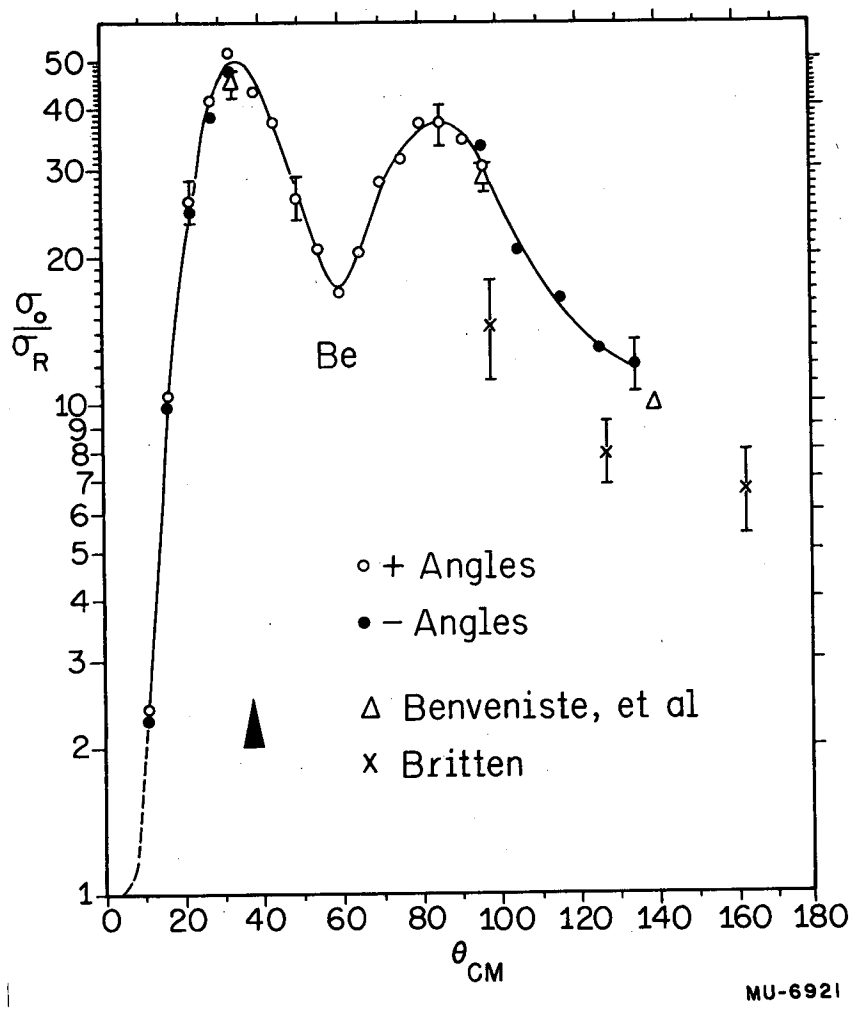

Fig. 3. The ratio of the observed elastic scattering to the Rutherford cross section plotted as a function of the center of mass angle of scattering for Be.

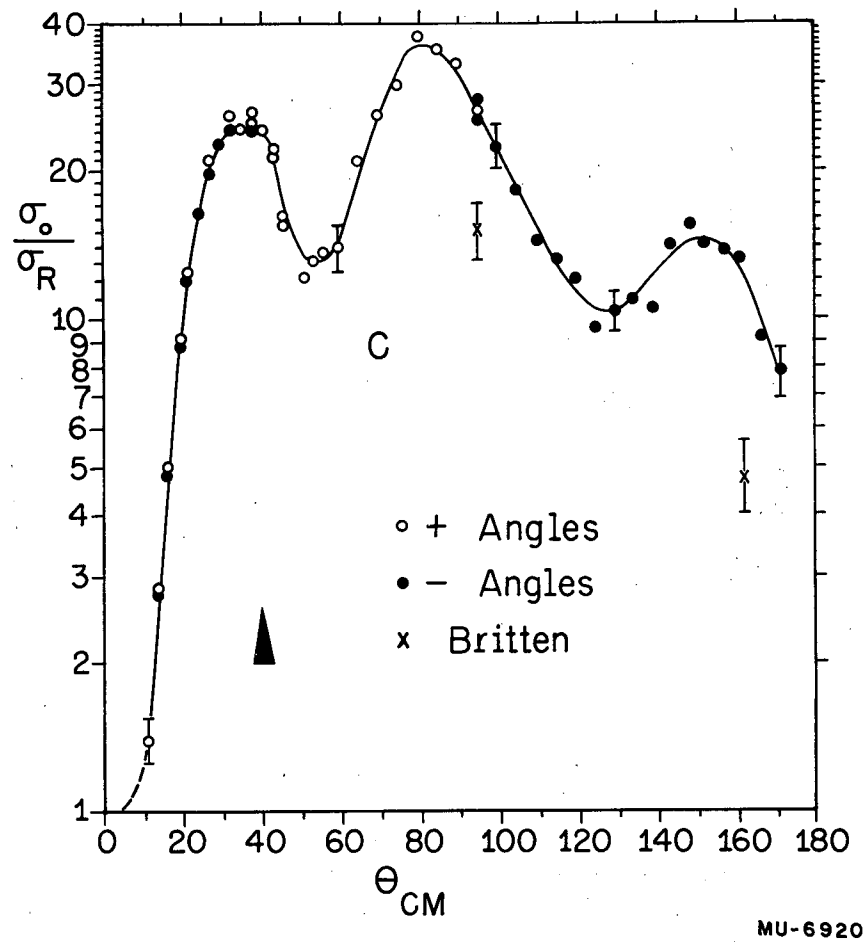

Fig. 4. The ratio of the observed elastic scattering to the Rutherford cross section plotted as a function of the center of mass angle of scattering for C.

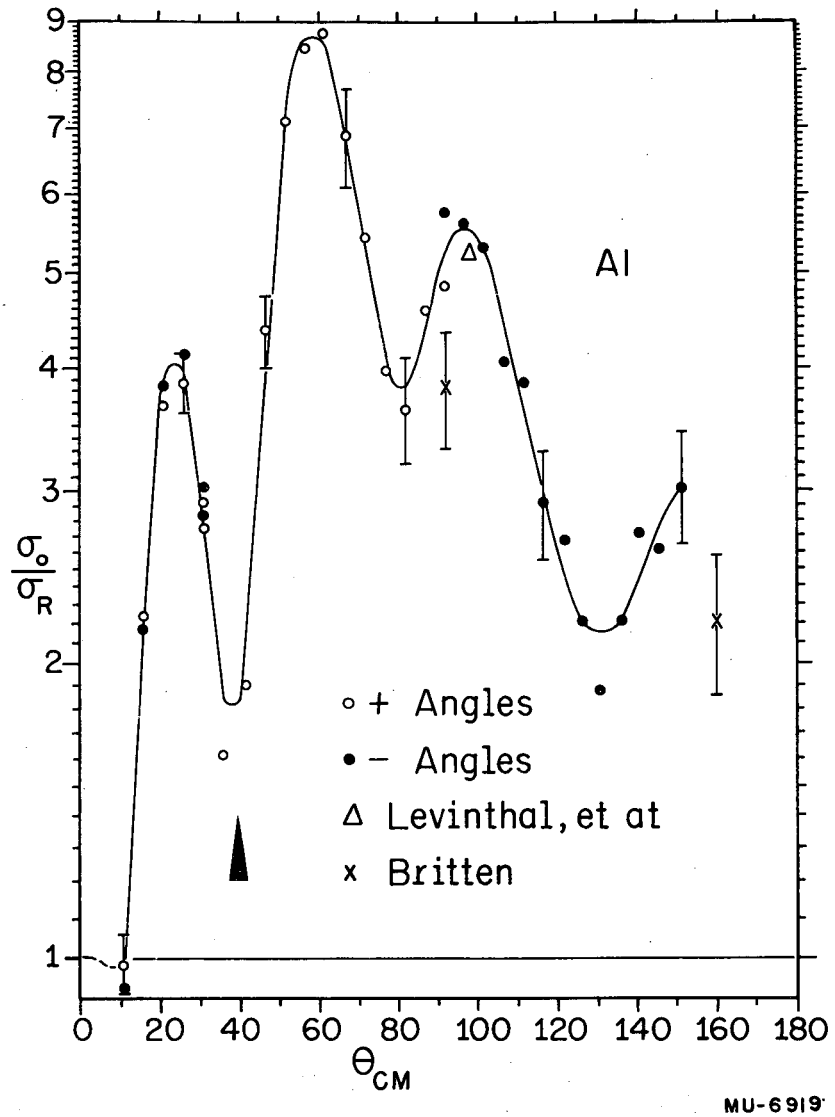

Fig. 5. The ratio of the observed elastic scattering to the Rutherford cross section plotted as a function of the center of mass angle of scattering for Al.

REFERENCES

1. B. L. Cohen and Rodger V. Neidigh, Physical Review.

2. Roy Britten, Physical Review 88, 283 (1952).

3. C. Levinthal, E. A. Martinelli, and A. Silverman, Physical Review 78, 199, (1950).

4. L. W. Alvarez, Physical Review 78, 199, (1950).

5. J. H. Smith, Physical Review 71, 32 (1947).

6. E. L. Hubbard and K. R. MacKenzie, Physical Review 85, 107 (1952).

7. Jack Benveniste, et al., Private Communication.

8. Fullbright and Bush, Physical Review, 74, 1323(1948).