c. 1

UNIVERSITY OF CALIFORNIA
Radiation Laboratory

Cover Sheet
Do not remove

INDEX NO. UCRL-24
This document contains 63 pages + 58 fig.
This is copy 2 of 2 Series A

DECLASSIFIED

Issued to Info Div File
NNES - File
NNES - Vol. II Chap. II

SECRET

Classification

Each person who receives this document must sign the cover sheet in the space below

Route to	Noted by	Date	Route to	Noted by	Date
		9-17-[illegible]			

CLASSIFICATION CANCELLED
BY AUTHORITY OF THE DECLASSIFICATION
BRANCH, USAEC
DATE 1 5 1955
PERSON MAKING THE CHANGE

DECLASSIFIED

Vol II

CHAPTER II

MAGNETIC MEASURING INSTRUMENTS AND TECHNIQUES

by

John DePangher, R. K. Wakerling and A. Guthrie

2.01 Ballistic Galvanometer.

This instrument is used extensively in making magnetic measurements. The theory of its operation and various methods of using it in this field are well known. However, in view of the fact that it has been used extensively in a number of the measuring techniques applied in the Radiation Laboratory, it has been deemed advisable to describe the instrument in some detail for reference purposes.

2.01.1 Theory

Suppose that a source of flux linkage is in series with the ballistic galvanometer. Let the source of flux linkage be a search coil of effective area A in a magnetic field H. If the flux linkage through the coil be changed suddenly from ϕ_0 to ϕ_1 then the voltage, V, developed in the coil at any time is

$$V = \frac{1}{10^8} \frac{d\phi}{dt} \text{ volts} \tag{2.1}$$

Figure 2.1 is a diagram of the galvanometer circuit. R is the lumped circuit resistance, G the ballistic galvanometer, F a flux standard, S the search coil, and H the magnetic field strength. Assume that the self inductance of the circuit is small. The current, i, flowing at any time is

$$i = \frac{V}{R} \text{ amperes,} \tag{2.2}$$

while the time integral of the current is the charge

$$q = \int_0^t i \, dt \text{ coulombs,} \tag{2.3}$$

which is also equal to

UCRL-24
DECLASSIFIED

$$q = \int_0^t \frac{V}{R}\, dt = \frac{1}{10^8}\frac{1}{R}\int_{\phi_0}^{\phi_1} d\phi \quad \text{or}$$

$$q = \frac{\phi_1 - \phi_0}{10^8\, R} \qquad (2.4)$$

SECRET

The equation of motion of the galvanometer coil is

$$A\frac{d^2\theta}{dt^2} + B\frac{d\theta}{dt} + C\,\theta = D\,i, \qquad (2.5)$$

where A, B, C, and D are constants of the system, θ is the angular displacement of the coil from equilibrium and i is the current flowing. Multiplying the equation by dt and integrating, we have

$$A\int_0^t \frac{d^2\theta}{dt^2}\, dt + B\int_0^t \frac{d\theta}{dt}\, dt + C\int_0^t \theta\, dt = D\int_0^t i\, dt.$$

Let us assume that the current is of short time-duration so that the coil does not move during passage of the current. Then

$$\left[\frac{d\theta}{dt}\right]_0^t = \omega, \qquad \left[d\theta\right]_0^t = 0, \qquad \int_0^t \theta\, dt = 0, \qquad \int_0^t i\, dt = q,$$

and $A\omega = D\,q$ or $q = \frac{A}{D}\,\omega$. The quantity ω is the initial angular velocity imparted to the coil following the surge of current. The equations

$$q = \frac{A}{D}\,\omega, \qquad (2.6)$$

and

$$q = \frac{\phi_1 - \phi_0}{10^8\, R}$$

show that the initial angular velocity ω is proportional to the change of flux $\phi_1 - \phi_0$ or $\Delta\phi$.

The general solution of the equation

$$A\frac{d^2\theta}{dt^2} + B\frac{d\theta}{dt} + C\theta = 0, \qquad (2.7)$$

is now required in order to determine how much the galvanometer will deflect, assuming an initial angular velocity of ω. This equation is

a second order equation with constant coefficients and the general solution, including arbitrary constants α and β, is

$$\theta = \alpha \exp. p_1 t + \beta \exp. p_2 t , \tag{2.8}$$

where

$$p_1 = \frac{-B + \sqrt{B^2 - 4AC}}{2A} , \tag{2.9}$$

and

$$p_2 = \frac{-B - \sqrt{B^2 - 4AC}}{2A} . \tag{2.10}$$

Let

$$a = \frac{B}{2A} , \tag{2.11}$$

and

$$m = \frac{\sqrt{B^2 - 4AC}}{2A} .$$

Then

$$\theta = \exp. -at \left\{ \alpha \exp. mt + \beta \exp. -mt \right\} . \tag{2.12}$$

To evaluate α and β boundary conditions of

$$\theta = 0 \text{ at } t = 0 , \tag{2.13}$$

and

$$\frac{d\theta}{dt} = \omega \text{ at } t = 0 , \tag{2.14}$$

are assumed.

Combining of Equations (2.12) and (2.13), we have

$$0 = \alpha + \beta \tag{2.15}$$

while Equation (2.12) must be differentiated and combined with Equation (2.14) to be useful. Differentiating Equation (2.12),

$$\frac{d\theta}{dt} = -a \exp. -at \left\{ \alpha \exp. mt + \beta \exp. -mt \right\}$$

$$+ \exp. -at \left\{ \alpha m \exp. mt - \beta m \exp. -mt \right\}$$

For $t = 0$,

$$\omega = -a (\alpha + \beta) + (\alpha - \beta) m \tag{2.16}$$

Solving the two linear Equations (2.15) and (2.16) for α and β,

$$\alpha = \frac{\omega}{2\,m} . \tag{2.17}$$

and

$$\beta = -\frac{\omega}{2\,m} . \tag{2.18}$$

The process of substituting these values into Equation (2.12) yields

$$\theta = \exp.\ -at\ \frac{\omega}{m}\left\{\frac{\exp.\ mt - \exp.\ -mt}{2}\right\} \tag{2.19}$$

or

$$\theta = \exp.\ -at\ \frac{\omega}{m}\ \sinh mt\ . \tag{2.20}$$

The condition for maximum value of θ may be determined by differentiating the right hand side of Equation (2.20) and setting it equal to zero.

$$\frac{d}{dt}\left\{\exp.\ -at\ \frac{\omega}{m}\ \sinh mt\right\} = \exp.\ -at\ \frac{\omega}{m}\ m \cosh mt - a\ \exp.\ -at\ \frac{\omega}{m}\ \sinh mt = 0$$

Therefore, $\cosh mt = \frac{a}{m}\ \sinh mt$.

or

$$\tanh mt = \frac{m}{a} \tag{2.21}$$

The result of combining Equations (2.20) and (2.21) is

$$\theta_{max} = \frac{\omega}{\sqrt{a^2 - m^2}}\ \exp.\ -\frac{a}{m}\ \tanh^{-1}\frac{m}{a} \tag{2.22}$$

making use of the relationship

$$\operatorname{csch}^2 mt = \coth^2 mt - 1.$$

But $\omega = \frac{D}{A}\ \frac{\phi_1 - \phi_o}{10^8\ R}$ from Equations (2.4) and (2.6) so

$$\theta_{max} = \frac{\phi}{\sqrt{a^2 - m^2}}\ \frac{D}{A\ 10^8\ R}\ \exp.\ \frac{a}{m}\ \tanh^{-1}\frac{m}{a}\ . \tag{2.23}$$

<u>Thus the deflection is proportional to the change of flux.</u>

2.01.2 <u>Operation</u>

Suppose a magnetic field strength H is to be measured. Let the flux linkage ϕ in the search coil of effective area A be changed by one of the following methods:

(1) The coil is suddenly jerked completely out of the field.

(2) The current producing the field is rapidly reduced to zero.

(3) The coil is flipped through 180° in the field thus cutting the line of force twice.

(4) The coil is moved in jerks from point to point in the field to yield uniformity data.

The basic circuit has already been shown in Figure 2.1. The section on ballistic galvanometer theory has shown that the instrument is linear providing the differential equation describes the motion of the coil accurately and the assumption about a short current pulse is fulfilled. Now the galvanometer may be calibrated.

The flux standard F (to be described in detail in a later section of this report) produces a galvanometer deflection d_s for a change of line turns ϕ_s. Evaluation of the field H that links an effective area A and produces a galvanometer deflection d is accomplished by making use of the following relationship:

$$\frac{\phi}{\phi_s} = \frac{AH}{\phi_s} = \frac{d}{d_s} \tag{2.24}$$

Equation (2.24) is a statement of linearity. In another form it may be written as

$$H = \frac{\phi_s}{d_s}\frac{d}{A} \tag{2.25}$$

If the coil were flipped, a factor of two would be entered into the denominator of the right member of Equation (2.25).

The linearity relationship holds true to about one percent accuracy for a moderately bad case where the standard deflection is approximately one-half the deflection to be calibrated. This slight deviation from linearity occurs because the damping term B in Equation (2.5) changes as the galvanometer deflects. The galvanometer magnetic field in which the suspension rotates is not quite uniform. The recording scale should be circular and located at a distance equal to its radius of curvature

from the galvanometer. Field measurements may be made to one-half of one percent accuracy by bracketing the deflections to be interpreted with deflections from the flux standard and then interpolating.

The circuit resistance R must be kept constant during measurement and calibration. The manner in which the sensitivity varies with circuit resistance is described by Equation (2.23). The quantities a and m are, of course, functions of R.

2.01.3 Relative Merits.

The most desirable characteristic of the ballistic galvanometer is: Although thermal and contact emf's displace the zero of the instrument a constant amount during the course of a test of not more than half an hour's duration, ballistic readings are not in error by this amount since the zero of each reading is taken at the point of equilibrium of all torques acting on the galvanometer coil. For convenience in calculation, the zero of the instrument may be corrected periodically by applying a compensating emf in series with the galvanometer.

Undesirable characteristics are:

1. The cycle of pulse, deflection, and return to zero is time-consuming.
2. The galvanometer coil suspended by a single wire is extremely susceptible to vibration. During transport the coil may be damaged easily unless certain precautions are taken.
3. The pulse must be of short duration as compared to the period of the instrument.

2.02 Electronic Fluxmeter.[1]

The electronic fluxmeter was developed for measuring small changes in a uniform magnetic field in the shortest time possible. This was necessary because of the excessive heating of small models of very large magnets. The search coil, S, in Figure 2.2, was pulled rapidly through the magnetic field being measured. The flux measurements appeared as a

vertical deflection on a nine-inch oscilloscope and were photographed. The sweep of the oscilloscope gave an indication of the location of the coil in the field.

2.02.1 Theory.

When the search coil S in Figure 2.2 is drawn through the magnetic field a voltage is developed across it. This voltage is amplified by the amplifier and is then fed into the condenser C through the resistance R. The voltage from the amplifier is

$$E(t) = \frac{G}{10^8} \frac{d\phi}{dt} \text{ volts,} \tag{2.26}$$

where G is the amplification factor of the amplifier and $\frac{d\phi}{dt}$ is the rate of change of flux through the search coil. The RC circuit is used as an integrating network and the theory will discuss the operation of this network.

The equation for the RC circuit is

$$i\,R + \frac{q}{C} = E(t), \tag{2.27}$$

where i is the charging current of the condenser and q is the charge accumulated by the condenser. Upon making the substitution $i = \frac{dq}{dt}$ and dividing the entire equation by R, Equation (2.27) may be rewritten as

$$\frac{dq}{dt} + \frac{q}{RC} = \frac{E(t)}{R}. \tag{2.28}$$

The solution of Equation (2.28) is:

$$q = \exp.\left(-\int \frac{dt}{RC}\right) \int \frac{E(t)}{R} \exp.\left(\int \frac{dt}{RC}\right) dt + C \exp.\left(-\int \frac{dt}{RC}\right) \text{ coulombs}$$

or

$$q = \exp.\left(-\frac{t}{RC}\right)\left\{\frac{G}{10^8 R} \int \frac{d\phi}{dt} \exp.\ (t/RC)\ dt + C\right\} \text{ coulombs,} \tag{2.29}$$

after substituting the value of E(t) from Equation (2.26). The function $\frac{d\phi}{dt}$ must be known in order to perform the integration. The following assumptions are made to permit solution of the problem: (1) the flux

change ϕ occurs in a very short time and (2) the time constant RC is large.

The quantity $\frac{t}{RC}$ is now assumed to be so small that exp. (t/RC) and exp. (-t/RC) may be expanded in an infinite series neglecting all but the first two terms. Thus

$$\exp.\ (t/RC) = 1 + \frac{t}{RC}, \tag{2.30}$$

and

$$\exp.\ (-t/RC) = 1 - \frac{t}{RC}. \tag{2.31}$$

Equation (2.29) upon substitution of these quantities becomes

$$q = \left(1 - \frac{t}{RC}\right) \left[\frac{G}{10^8 R} \int_t \frac{d\phi}{dt}\, dt + \frac{G}{10^8 R^2 C} \int_t t\, \frac{d\phi}{dt}\, dt + C\right] \tag{2.32}$$

The boundary condition $q = 0$, $\phi = \phi_o$, at $t = 0$ will permit determination of the arbitrary constant C.

Equation (2.32) becomes

$$q = \left(1 - \frac{t}{RC}\right) \left[\frac{G}{10^8 R} (\phi - \phi_o) + \frac{G}{10^8 R^2 C} \int_o^t t\, \frac{d\phi}{dt}\, dt\right]. \tag{2.33}$$

The output voltage $e(t) = \frac{q}{C}$ is

$$e(t) = \left(1 - \frac{t}{RC}\right) \left[\frac{G}{10^8 RC} (\phi - \phi_o) + \frac{G}{10^8 R^2 C^2} \int_o^t t\, \frac{d\phi}{dt}\, dt\right]. \tag{2.34}$$

Good integration occurs when RC is large and t is small. For the ideal case,

$$e(t) = \frac{G\ (\phi - \phi_o)}{10^8 RC}\ . \tag{2.35}$$

where the output voltage is linearly dependent on the change of flux in the search coil. Poorer integration with a shorter time constant and longer period of integration demands that e(t) be, at least, represented by

$$e(t) = \frac{G}{10^8 RC} (\phi - \phi_o) + \frac{G}{10^8 R^2 C^2} \int_o^t t\, \frac{d\phi}{dt}\, dt\ \ldots, \tag{2.36}$$

in which the form of the function $\frac{d\phi}{dt}$ must be determined.

The fractional error in integration, s, is

$$s = \frac{\frac{G}{10^8 R^2 C^2}\int_0^t t\,\frac{d\phi}{dt}\,dt}{\frac{G}{10^8 RC}(\phi - \phi_0)} = \frac{1}{RC}\,\frac{\int_0^t t\,\frac{d\phi}{dt}\,dt}{\phi - \phi_0} \quad . . . \qquad (2.37)$$

If RC is large then the fractional error becomes small but at the same time the output voltage e(t) in Equation (2.35) becomes small thereby reducing the sensitivity of the instrument.

The electronic fluxmeter is used to measure the drop-off in field at the edge of a gap. It is moved from inside the gap out over the edge. The function $\phi(t) = \phi_0(1 - bt^2)$ comes sufficiently close to representing the actual experimental curve to warrant a discussion. The purpose of the discussion is to find out how large the fractional error s becomes.

Now $\frac{d\phi}{dt} = 2\phi_0\, bt$ and $s = \frac{1}{RC}\,\frac{\int_0^t 2\,bt^2\,dt}{bt^2} = \frac{2}{3}\,\frac{t}{RC}$.

It is possible to move the coil out of the gap in about 0.2 seconds to where the field has dropped by 10 percent. This means that $s = \frac{2}{3} \times \frac{0.2}{RC}$ and if we want an error in measurement not more than 2 percent then $RC = \frac{2}{3} \times .2 \times \frac{1}{.02} = 6.67$ seconds. A reasonable and satisfactory value for RC then lies in the neighborhood of 7 seconds.

2.02.2 <u>Operation.</u>

The voltage output e(t) varies too rapidly with time to be recorded accurately by a moving coil type of instrument. It may be recorded by photographing the screen of a cathode ray oscilloscope as the signal is applied to the vertical plates.

A block diagram of the circuit used is shown in Figure 2.3. The complete circuit drawings will not be shown here nor will the circuits

be discussed in detail as such a discussion is considered beyond the scope of this volume. Several points are of interest, however, and shall be noted here.

High gain in the d.c. amplifier is necessary to translate a small change of flux into a satisfactory electron beam deflection in the cathode ray tube. Some drift of the output voltage of the d.c. amplifier occurs as a result of (1) plate voltage variations, (2) variation in filament emission, and (3) thermal e.m.f.'s in the search coil circuit in spite of all efforts to reduce these quantities to a minimum. The overall maximum gain achieved in the last electronic fluxmeter built was several million.

Deflections resulting from changes of flux linkage in the search coil are calibrated by comparing them with deflections produced by the flux standard F (See Figure 2.3) in series with it.

The search coil is connected mechanically with the moving contact of a potentiometer. The voltage across the potentiometer is amplified and fed to the horizontal plates of the oscilloscope so that the photograph of the oscilloscope gives the flux linkages as a function of position.

A photograph of an electronic fluxmeter with a nine inch diameter cathode-ray tube is shown as Figure 2.4. Beside the instrument is the camera holder that contains a Sept camera during operation. Figure 2.5 shows the fluxmeter with the camera holder in operating position. Figure 2.6 is a photograph of the electronic equipment contained within the chassis of the fluxmeter. Part of the equipment shown here is associated with transforming an input signal from the sliding contact of a potentiometer to a horizontal plate deflection voltage in the cathode-ray tube.

2.02.3 Relative Merits.

Desirable features of the electronic fluxmeter are:

1. A continuous record of flux change is achievable.

2. The electronic fluxmeter has no mechanical inertia to limit the recording of rapidly varying flux.

3. Any quantity associated with the change of flux may be plotted as a function of it on the cathode-ray screen.

4. The instrument is practically unaffected by vibration.

Undesirable features of the electronic fluxmeter are:

1. Accuracy is limited by:

   a. Non-linearity of the cathode-ray tube.

   b. Errors in photography of a curved screen.

   c. Non-linearity of d.c. amplifier.

   d. Error in integration where the time constant is low for high sensitivity.

2. Considerable patience must be exercised and time consumed in correcting for and checking the drift of the instrument. Sometimes drift may occur during the time in which the flux change occurs thus making necessary repeat measurements for checking purposes.

2.03 The General Electric Fluxmeter.[2]

Details regarding this instrument are available in the trade literature prepared by General Electric Co. However, due to the fact that the instrument has been used extensively in various magnetic measuring techniques applied in the Radiation Laboratory, it will be discussed in some detail here.

2.03.1 Theory.

Consider a d'Arsonval galvanometer connected in series with a search coil. Let R be the resistance of the search coil galvanometer suspension and armature, and suppose that the search coil has n turns of

average effective area A. If the magnetic field H through the coil changes at a rate $\frac{dH}{dt}$, then the voltage developed by the coil is $\frac{n\,A}{10^8}\frac{dH}{dt} = \frac{\dot{\phi}}{10^8}$.

As the armature turns through an angle θ at the rate $\dot{\theta} = \frac{d\theta}{dt}$ the n turns of the armature cut through the magnetic lines of the field H of the galvanometer magnet. The number of cuts G made for an angle of one radian is $2H\,n\,a\,\ell$, where a is the average radius of the armature and ℓ its length. Hence $G = 2H\,n\,a\ell = ng$, where $g = 2H\,a\ell$ = H times the area of a turn of the armature. The voltage developed in the circuit due to the turning of the coil is $\frac{G}{10^8}\dot{\theta}$.

If a current of I amperes flows in the armature the torque in dyne centimeters produced on the suspension is $\frac{2H\,n\,a\,\ell I}{10} = \frac{G\,I}{10}$. This follows from the fundamental law that the force in dynes on a conductor of length ℓ, in a field H, carrying a current I is $\frac{H\,I\,\ell}{10}$, where H is in oersteds, I is in amperes, and ℓ is in centimeters.

If L is the inductance in the circuit then the voltage around the circuit must satisfy the equation

$$I\,R + L\,\dot{I} + \frac{G\,\dot{\theta}}{10^8} = \frac{\dot{\phi}}{10^8} \tag{2.38}$$

If J is the moment of inertia of the armature, N the air damping and suspension friction of the armature, and ψ the torsion constant of the suspension then the equation of motion of the armature is

$$J\,\ddot{\theta} + N\,\dot{\theta} + \psi\,\theta = \frac{G\,I}{10}. \tag{2.39}$$

From (2.38) $I = \frac{\dot{\phi}}{10^8 R} - \frac{L}{R}\dot{I} - \frac{G\,\dot{\theta}}{10^8 R}$

Substituting for I in (2.39) it becomes

$$J\,\ddot{\theta} + \left(N + \frac{G^2}{10^9 R}\right)\dot{\theta} + \psi\,\theta = \frac{\dot{\phi}\,G}{10^9 R} - \frac{G\,L\,\dot{I}}{10\,R} \tag{2.40}$$

Now, if there is a steady torque T on the armature and a thermal or

contact electromotive force E, then the equation (2.40) becomes:

$$J\ddot{\theta} + \left(N + \frac{G^2}{10^9 R}\right)\dot{\theta} + \psi\,\theta = T + \frac{\dot{\phi}\,G}{10^9 R} - \frac{G\,L\,I}{10\,R} + \frac{E\,G}{R\,10} \qquad (2.41)$$

Attached to the armature of the G.E. Fluxmeter is a small permanent magnet oriented in opposition to the stray magnetic field of the fluxmeter magnet. The strength of the stray field can be altered by adjusting the position of two iron pads. When set properly the effect of this addition is to cancel out the restoring torque of the suspension almost completely, so that $\psi = 0$. Also the constants of the armature are such that N is negligible with respect to $\frac{G^2}{10^9 R}$. Equation (2.41) simplifies to the form

$$J\ddot{\theta} + \frac{G^2}{10^9 R}\dot{\theta} = T + \frac{\dot{\phi}\,G}{10^9 R} - \frac{G\,L\,\dot{I}}{10\,R} + \frac{E\,G}{R\,10} \qquad (2.42)$$

If the boundary conditions are chosen so that θ, $\dot{\theta}$, $\ddot{\theta}$, and ϕ are all zero when $t = 0$, then equation (2.42) when integrated becomes:

$$J\dot{\theta} + \frac{G^2}{10^9 R}\theta = \int_0^t T\,dt + \frac{\phi\,G}{10^9 R} - \frac{G\,L}{10\,R}(I_t - I_o) + \frac{G}{10\,R}\int_0^t E\,dt, \qquad (2.43)$$

where I_t is the current at time t and I_o is the current at $t = 0$.

If both T and E are constants, then equation (2.43) becomes

$$J\dot{\theta} + \frac{G^2}{10^9 R}\theta = T\,t + \frac{G}{R\,10}E\,t + \frac{\phi\,G}{10^9 R} - \frac{G\,L\,(I_t - I_o)}{10\,R} \qquad (2.44)$$

To see how this equation behaves in practice, we will set up the usual procedure for measuring a magnetic field.

The search coil is moved into a field and held there until the fluxmeter armature stops moving. Then the deflection is recorded. Before and after this process $\dot{\theta} = 0$. This is impossible if the two terms $T\,t$ and $\frac{G}{R}E\,t$ are not zero. In order to make them zero a small voltage is introduced into the circuit of such a magnitude as to produce a current canceling out both of these terms. When this is done $I_t = I_o$

and the equation becomes

$$J\,\dot{\theta} + \frac{G^2}{10^9\,R}\,\theta = \frac{\phi\,G}{10^9\,R}. \tag{2.45}$$

In operation the armature comes to rest before the reading is taken. This means that $\dot{\theta}$ is zero and the sensitivity of the fluxmeter is $\frac{\theta}{\phi} = \frac{1}{G}$.

Since the magnetic compensation is not perfect, T, the torque on the armature, changes with θ. This is particularly troublesome because in practice it means that the instrument may show no drift at the beginning of an observation and then considerable drift after the armature has rotated. Then it becomes difficult to decide when the motion due to the change in flux ceases and only a drift remains. From equation (2.42) it is apparent that the rate of drift due to T alone is

$$\dot{\theta} = \frac{10^9\,R\,T}{G^2}. \tag{2.45a}$$

This comes from the second and third terms in (2.42) by setting all other terms equal to zero. For this drift to be small it is an advantage to have R small but more particularly to have G large.

If readings are to be made rapidly, then the armature must come to rest quickly after a deflection. The dynamic characteristics of the armature determine this behavior.

We will assume that the armature has a rate of rotation of $\dot{\theta}$, that the self inductance L is negligible, that there is no drift, and that N and ψ are negligible. Then the equation of motion is

$$J\,\ddot{\theta} + \frac{G^2}{10^9 R}\,\dot{\theta} = \frac{\dot{\phi}\,G}{10^9\,R}.$$

Let the flux through the coil stop changing. Then we have $\dot{\phi} = 0$ and the equation becomes $J\,\ddot{\theta} + \frac{G^2}{10^9\,R}\,\dot{\theta} = 0$.

Let $\dot{\theta} = \dot{\theta}_0 \exp.-Kt$. Then $\ddot{\theta} = -K\,\dot{\theta}$ and the equation becomes

$$-J\,K\,\dot{\theta} + \frac{G^2}{10^9\,R}\,\dot{\theta} = 0 \qquad \text{or}$$

$$K = \frac{G^2}{10^9\,RJ} \tag{2.45b}$$

This satisfied the boundary condition that $\dot{\theta}_o$ is the rate of rotation of the armature at $t = 0$. It also means that if $\theta = 0$ at zero time, then

$$\theta = \int_o^t \dot{\theta}\,d\,t = -\frac{1}{K}\,\dot{\theta}_o\,(\exp.-Kt - 1) = \frac{10^9\,R\,J\,\dot{\theta}_o}{G^2}\left[1 - \exp.\left(\frac{-G^2\,t}{10^9\,R\,J}\right)\right] \tag{2.45c}$$

Now we are concerned with the time it takes for $1 - \frac{\theta_t}{\theta_\infty}$ to become a small quantity, such as .001. This means that

$\exp.\left(\frac{-G^2\,t}{10^9\,R\,J}\right) = .001$, or $\exp.\left(\frac{G^2\,t}{10^9\,R\,J}\right) = 1000$, or $\frac{G^2\,t}{10^9\,R\,J} = 6.9$.

Now G^2 for a typical instrument is $n^2\,g^2$, and

$$g = 6450$$

$$n = 1170$$

$$J = .420$$

$$R = 3600$$

so

$$\frac{G^2}{10^9\,R\,J} = 37.7,$$

$$t = \frac{6.9}{37.7} = .186, \qquad \text{and}$$

$$\theta_\infty - \theta_t = \frac{\dot{\theta}_o}{37.7} \times (.001) = 2.7 \times 10^{-5}\,\dot{\theta}_o$$

If $\dot{\theta}$ is the angular velocity of the armature resulting from a change of flux producing a ten centimeter deflection in a tenth of a second, then two tenths of a second later the angular velocity of the armature will be $.001 \times \frac{10}{100 \times .1} = .001$ radians per second, or 0.1 cm per second. The subsequent deflection $\theta_\infty - \theta_t$ becomes 2.7×10^{-3} cm, which is completely negligible.

The question arises as to what advantages a more sensitive fluxmeter

has over a less sensitive one. This involves the design of the search coil if we are concerned with the magnitude of the signal resulting from a particular magnetic field.

We will compare two armatures with the following properties: $g_1 = g_2$, $n_1 > n_2$, $J_1 = J_2$. Let us wind armature 1 with many turns of fine wire and armature 2 with a few turns of heavy wire. Let S_i be the space occupied by the insulation, S_c the space occupied by the copper, W_i the weight of the insulation, and W_c the weight of the copper. In order to simplify the argument we will assume that

$$\frac{W_{i_1}}{W_{i_2}} = \frac{W_{c_1}}{W_{c_2}} \quad \text{and} \quad \frac{S_{i_1}}{S_{i_2}} = \frac{S_{c_1}}{S_{c_2}} \tag{2.46}$$

Let $\frac{\theta}{\phi}$ be defined as the Maxwell-turns sensitivity. Then the Maxwell-turns sensitivity is equal to

$$\frac{\theta}{\phi} = \frac{1}{n\,g}. \tag{2.47}$$

This equation follows from equation (2.45) if $J\dot{\theta}$ is small as compared to $\frac{G^2}{10^9\,R}\,\theta$.

Two search coils are designed to fit in a certain fixed volume. If we assume that (2.46) holds for the search coils, and if we wind the search coil for armature 1 with n_{s_1} turns and for armature 2 with n_{s_2} turns, the Maxwell-turns delivered for the coils when they are inserted in a magnetic field of strength H will be $n_s A_s\,H$, where A_s is the average area of the turns. Let

$$\frac{n_{s_1}}{n_{s_2}} = \frac{n_{A_1}}{n_{A_2}} \tag{2.48}$$

Then from (2.47) and (2.48) the deflections produced in the two armatures will be

$$\theta_1 = \frac{n_{s_1}\,A_s\,H}{n_{A_1}\,g} = \frac{n_{s_2}\,A_s\,H}{n_{A_2}\,g} = \theta_2 \tag{2.49}$$

Let R_A = the resistance of the armatures and R_S = the resistance of the search coils. If ρ is the resistivity of the copper, then the resistance of one turn becomes $r_s = \frac{\ell_s \rho}{a_s}$ where ℓ_s is the length of a turn and a_s the cross sectional area of the copper. The resistance of the whole coil will be

$$R_s = \sum_{n=1}^{n=n_s} \frac{\ell_s \rho}{a_s} = \frac{\rho}{a_s} \sum_{n=1}^{n=n_s} \ell_s, \tag{2.50}$$

but because of the assumptions (2.46)

$$\frac{a_{s_1}}{a_{s_2}} = \frac{n_{s_2}}{n_{s_1}} \tag{2.51}$$

If $\bar{\ell}_s$ is the average length of a turn, then $R_s = \frac{\rho}{a_s} n_s \bar{\ell}_s$. Therefore, $R_{s_1} = \frac{\rho}{a_{s_1}} n_{s_1} \bar{\ell}_s$,

$$R_{s_2} = \frac{\rho}{a_{s_2}} n_{s_2} \bar{\ell}_s \quad \text{and} \quad \frac{R_{s_1}}{R_{s_2}} = \frac{a_{s_2}}{a_{s_1}} \times \frac{n_{s_1}}{n_{s_2}}, \quad \text{or}$$

$$\frac{R_{s_1}}{R_{s_2}} = \frac{n_{s_1}}{n_{s_2}^2} \tag{2.52}$$

A similar argument holds for the ratio of the resistances of the armature windings. It follows from (2.52) and (2.48) that

$$\frac{R_{A_1}}{R_{A_2}} = \frac{n_{A_1}^2}{n_{A_2}^2} = \frac{n_{s_1}^2}{n_{s_2}^2} = \frac{R_{s_1}}{R_{s_2}} \quad \text{and} \tag{2.53}$$

$$\frac{R_{A_1} + R_{s_1}}{R_{A_2} + R_{s_2}} = \frac{R_1}{R_2} = \frac{n_{A_1}^2}{n_{A_2}^2} = \frac{n_{s_1}^2}{n_{s_2}^2} \tag{2.54}$$

Now from (2.49) both instruments with their search coils have the same sensitivity. We will examine drift and speed of deflection to see which instrument gives the best performance.

From (2.45a) the rate of drift due to a constant torque is $\dot{\theta} = \frac{10^9 R T}{G^2}$.

Therefore,

$$\frac{\dot{\theta}_1}{\dot{\theta}_2} = \frac{10^9 R_1}{10^9 R_2} \times \frac{G_2^2}{G_1^2} = \frac{n_{A_1}^2}{n_{A_2}^2} \times \frac{n_{A_2}^2 g^2}{n_{A_1}^2 g^2} = 1 \tag{2.55}$$

The drift is independent of the choice of windings.

The speed of deflection depends only on the value of K in equation (2.45b).

Therefore,

$$\frac{K_1}{K_2} = \frac{G_1^2}{10^9 R_1 J} \times \frac{10^9 R_2 J}{G_2^2} = \frac{G_1^2}{G_2^2} \times \frac{R_2}{R_1} = 1 \tag{2.56}$$

Hence the speed of deflection is independent of the choice of windings.

The drift due to a constant electromotive force in the instrument is from (2.42) $\dot{\theta} = \frac{10^8}{G} E$.

Therefore,

$$\frac{\dot{\theta}_1}{\dot{\theta}_2} = \frac{G_2}{G_1} = \frac{n_{A_2}}{n_{A_1}} \tag{2.57}$$

Hence the rate of drift due to a constant electromotive force is proportional to the sensitivity or inversely proportional to the number of turns on the armature.

<u>Practical Considerations.</u>

If a search coil of many turns is used with a less sensitive instrument, then there are advantages which make it more desirable than a coil of few turns with a more sensitive instrument.

1. The resistance of the leads to the search coil and of standardizing mutual inductances in the search coil circuits can be large.

2. Poorer contacts in the search coil circuits can be tolerated.

3. The effective area of the search coil is large in comparison with the areas of loops in the leads. Not so much care is necessary in handling the leads.

4. The drift due to a constant thermal or contact electromotive

force is less for the many turn armature.

All these advantages outweigh the disadvantages arising from the necessity of constructing a search coil of many turns of fine wire. Two disadvantages arise from using very fine wire: first, the difficulty of winding the wire without breakage and second, the larger proportion of the available area occupied by the insulation on the fine wire. This alters the assumptions made in (2.46). One factor tends to cancel this effect. The resistance of the suspension itself is about 12 ohms. This 12 ohms is added to the resistance of the armature. For very sensitive instruments with few turns this becomes an appreciable proportion of the total resistance in the circuit and makes the instrument more sluggish.

For speed of operation a low value of J is important. As long as J lies in the neighborhood of .420 gram centimeters-squared and $\frac{G^2}{10^9 R J} \cong 40$, readings can be made with an accuracy of 0.1 percent in 0.3 seconds. Motion pictures of the deflections of the fluxmeter prove that this is a reasonable speed with which to take readings.

Since drift is the most troublesome feature of a fluxmeter the advantages of the low sensitivity fluxmeter far outweigh those of the high sensitive ones for accurate reliable measurements.

2.03.2 <u>Operation.</u>

The fluxmeter circuit contains a search coil S, a compensating e.m.f. unit E of low impedance, a flux standard F, a shunting resistance A, a series resistance B, and an external lumped resistance K as shown in Figure 2.7. The unit E is also capable of providing a positive or negative voltage for zeroing the fluxmeter. The shunting resistance A is used to change the sensitivity of the fluxmeter.

The fluxmeter sees only the voltage between the points C and D across shunt A. The difference of potential

$$E_{CD} = \frac{1}{10^8}\frac{d\phi}{dt} - IK \tag{2.58}$$

where I is the amperes current flowing through K ohms.

The current I is

$$I = \frac{\frac{1}{10^8}\frac{d\phi}{dt}}{K + \frac{AB}{A+B}} \tag{2.59}$$

Thus

$$E_{CD} = \frac{1}{10^8}\frac{d\phi}{dt}\left(1 - \frac{K}{K + \frac{AB}{A+B}}\right) \tag{2.60}$$

The current i through the fluxmeter is

$$i = \frac{E_{CD}}{B} = \frac{1}{10^8 B}\frac{d\phi}{dt}\left(1 - \frac{K}{K + \frac{AB}{A+B}}\right) \tag{2.61}$$

The torque U on the suspension due to this current is

$$U = \frac{G\,i}{10} = \frac{G}{10^9\,B}\frac{d\phi}{dt}\left(1 - \frac{K}{K + \frac{AB}{A+B}}\right) \tag{2.62}$$

G has already been defined as torque per unit current.

The damping term (See equation (2.42)) is $\frac{G^2}{10^9\,R}\frac{d\theta}{dt}$, where R is the resistance of the fluxmeter circuit.

$$R = B + \frac{AK}{A+K} \tag{2.63}$$

The operation of equating damping and torque terms gives us

$$\frac{G^2}{10^9\left(B + \frac{AK}{A+K}\right)}\frac{d\theta}{dt} = \frac{G}{10^9\,B}\frac{d\phi}{dt}\left(1 - \frac{K}{K + \frac{AB}{A+B}}\right)$$

which yields

$$\frac{d\theta}{d\phi} = \frac{1}{G}\frac{A}{A+K} \tag{2.64}$$

The sensitivity of the fluxmeter is independent of the resistance B but can be altered by changing A. In practice it is important to

keep K large when A is small. When this is done then contact resistances in the external circuit remain small in comparison to K and changes in contact resistance have a negligible effect on the sensitivity of the fluxmeter.

The drift of the fluxmeter must be kept to a minimum. For deflections over 10 cm (See Fluxmeter Mounting) in length there may be drift occurring while the reading is being made even though initially the e.m.f. compensator E (See Figure 2.7) may be adjusted perfectly. This phenomenon occurs since magnetic compensation is not perfect for all values of θ, the angular deflection of the fluxmeter. The torque T (See equation (2.41) is a function of θ.

2.03.3 Mounting.

The light from an automobile headlight bulb L passes through a short focal length lens C_1. (Figure 2.8) A narrow vertical index line is drawn vertically across the front of lens C_1. The light is focused on the mirror M through the objective lens O which is adjusted so as to focus the index line onto the scale S. The scale is placed 50 cm from the mirror M and is drawn with black lines 1 mm apart on transparent lucite. The condenser lens C_2 covers 6 cm of the scale and focuses an image of mirror M on the objective lens of camera K. Readings can be made both by visual observation of the scale in which case lens C_2 is removed and the scale is 25 cm long or the readings can be photographed by camera K. Positive film of low sensitivity, high contrast, and fine grain is used so that the room can be illuminated without affecting the film. A typical picture is shown in Figure 2.9.

The camera is a Sept motion picture camera using 35 mm film. By depressing the release a single frame is exposed and the film readied for the next picture. The release is depressed by a solenoid puller so that an exposure may be made by remote control. Views of the various

parts of the fluxmeter are shown in Figures 2.10, 2.11 and 2.12.

2.03.4 Relative Merits.

The chief advantages of this instrument are:

1. The cycle of signal, deflection, and reading does not include resetting to zero unless the readings are so large as to go off scale.

2. The difference between the reading of the fluxmeter with the search coil at Point A and the reading of the fluxmeter with the search coil at Point B is dependent only on the change of flux linkage of the search coil between Point A and Point B under the achievable conditions of:

(a) The search coil being held at Point B long enough (no more than two-tenths of a second is necessary) for the fluxmeter coil to come to rest, and

(b) The drift being held to a minimum.

The condition (a) is easily achievable, but the fulfillment of condition (b) is more difficult. Slight amounts of drift due to changing thermal e.m.f.'s and imperfect magnetic compensation are always present. However, if a set of readings is taken quickly under favorable conditions (say ten readings in ten seconds) the drift error can be made negligible.

3. The fluxmeter is reasonably insensitive to vibration (as compared to the ballistic galvanometer) because of the marine type suspension. Adequate protection of the fluxmeter coil during transport is achieved by merely shorting it.

Two operational disadvantages of the instrument are:

1. Magnetic compensation requires considerable patience and time although it is performed infrequently.

2. Drift must continually be checked and compensated for during a set of readings.

2.04 Magnetic Balance for Measuring Low Permeabilities. (3)

In order to measure the magnetic permeability of large sheets of

stainless steel, a permeability that ranges from 1.003 to values in excess of 1.05, a magnetic balance was constructed. Figure 2.13 illustrates the principles involved. At one end of an equal arm balance is a small horseshoe magnet of cobalt steel; at the other end is a coil which has a total area (i.e. the product of the number of turns by the average area of the turns) of approximately 5,000 cm^2. This coil is in series with a 12-volt battery supply, a variable resistor, a milliammeter, and a single-pole single-throw switch, and is positioned a centimeter or two above a second permanent magnet.

In order to calibrate the balance, a solenoid was used to determine the permeability of several cylindrical samples of stainless steel, each sample being roughly two inches long and one-half inch in diameter. Symmetrically placed inside the large solenoid were two short coils three-quarters of an inch long; coil #1 having a total area of 15,614 cm^2 and 4,578 turns; coil #2 having approximately the same area and 4,506 turns. A bakelite cylinder six inches in length was machined to hold these coils securely in place, one coil fitting snugly into one end of the cylinder, the other coil into the other end. These two coils were connected in series with each other and with a ballistic galvanometer. The polarities of the two coils were such that the induced e.m.f. in one opposed that in the other, thus giving only a slight deflection of the galvanometer when the field of the solenoid was varied. Included in the galvanometer circuit was a flux standard for the purpose of calibrating the galvanometer. By comparing the galvanometer deflection for a given change in the magnetic field of the solenoid for the case when the two bucking coils had no magnetic cores, with the galvanometer deflection for the same change in the solenoid field but with a core of stainless steel in coil #2, the magnetic permeability of the stainless steel core was obtained.

Figure 2.14 illustrates the two types of solenoid measurements that are involved.

In the derivation of the formula for the magnetic permeability the following terminology is employed:

ϕ_c = the line turns produced by the Cenco Variable Inductor.

ϕ_1 = Total flux turns for coil #1 (i.e. the product of the number of turns of coil #1 by the flux produced by the solenoid, S).

ϕ_2 = total flux turns for coil #2 with an air core.

ϕ_3 = total flux turns for coil #2 with metallic core.

A_1 and A_2 are the total areas of coils #1 and #2 respectively.

A is the cross sectional area of stainless steel sample.

H is the magnetic field intensity at the center of the solenoid.

N_2 is the number of turns of coil #2.

μ is the magnetic permeability of the stainless steel sample.

ΔA is the difference in the total areas of coils #1 and #2.

d_c is the galvanometer deflection in centimeters produced by the flux standard.

d_o is the galvanometer deflection for Case I, when the solenoid field is reduced from H to 0.

d_x is the galvanometer deflection for Case II, when the solenoid field is reduced from H to 0.

For Case I

$$\phi = HA_1$$

$$\phi = HA_2$$

$$\phi_2 - \phi_1 = H(A_2 - A_1) = H\Delta A = \frac{d_o}{d_c}\phi_c$$

For Case II

$$\phi_3 = H(A_2 - AN_2 + A\mu N_2)$$

$$\phi_3 - \phi_1 = H\Delta A + AN_2H(\mu - 1) = \frac{d_x}{d_c}\phi_c$$

Therefore

$$H(\mu - 1)AN_2 = \frac{\phi_c}{d_c}(d_x - d_o)$$

And

$$\mu - 1 = \frac{\phi_c\ (d_x - d_o)}{AN_2Hd_c}$$

When, as was the case in this work, the field, H, of the solenoid is reversed rather than reduced to zero, a factor of 2 appears in the denominator of the final expression, giving

$$\mu - 1 \quad \frac{\phi_c\ (d_x - d_o)}{2AN_2Hd_c}$$

The error involved in disregarding the demagnetizing field produced by poles at the ends of the cylindrical samples was estimated and found to be negligible for low permeability cylinders having a length of two inches and a diameter of one-half inch.

When the flux standard was set for 87,000 line turns, the galvanometer deflection was 5.30 cm. Thus

$$\phi_c = 87{,}000$$

$$d_c = 5.30$$

Also $N_2 = 4{,}506$ turns

and $H = 2.6$ oersteds

Tabulated below are the results of the measurements on three cylindrical samples:

Sample	A	$\lvert d_x - d_o \rvert$	$\mu - 1$
1	1.06 cm^2	0.335 cm	0.00267
2	1.11	0.555	0.00422
3	1.23	1.205	0.00803

The magnetic balance was adjusted to be slightly heavy at the end carrying the permanent magnet. The current, I_o, is the least current through the balancing coil which will raise the magnet when no magnetic

material is placed beneath the magnet. The currents I_1, I_2 -- are then measured, these being the least currents that will raise the magnet when samples 1, 2 -- are placed beneath the magnet. The calibration curve consists of a plot of $I_1 - I_o$, $I_2 - I_o$ -- against the values of the magnetic permeability of samples 1, 2 --. This curve is a straight line within the region considered (See Figure 2.15). Some difficulty was encountered in obtaining a sample whose permeability was (1) greater than that of sample No. 3; (2) less than the upper limit measurable with the balance; and (3) uniform throughout the sample, but there is reason to believe that the calibration curve of the balance remains a straight line to values of the magnetic permeability at least as high as 1.05.

2.05 Magnetic Standards.

In the course of designing magnets and testing their performance, it is necessary to resort to the use of standards, the expected behavior of which can be calculated from geometrical considerations. In this section, the various factors guiding the design of search coil and flux standards will be discussed. Some standards found to be suitable for the type of work done in the Radiation Laboratory will be described briefly.

2.05.1 Search Coils.[4]

The measurement of a magnetic field H by the inductive method generally involves the determination of the two fundamental quantities expressed in the formula

$$H = \phi/A \qquad (2.65)$$

where A is the effective area of the search coil employed in the measurement and ϕ is the number of lines of flux through the coil. In all cases the physical size of the coil is assumed small enough so that the average field strength in the volume occupied by it is the field strength

at the center of it, within the experimental error associated with the measuring instruments. The search coil is usually wound on a small spool of bakelite, ivory, or lucite with many turns of fine wire. Effective areas of randomly wound coils may be calculated only approximately from geometrical considerations so other methods are needed to calibrate coils to greater precision.

In one method comparison of an unknown area with a known area is achieved quite easily through the use of standard coils, a very uniform magnetic field, and a rotable coil mount. The standard coil of effective area S is rotated to balance inductively the search coil of effective area X, provided, of course, that $S > X$. Let θ be the angle between the null position of the standard coil alone in the magnetic field and the null position of the standard coil in the series bucking combination. Then the effective area of the search coil is

$$X = S \sin \theta \tag{2.66}$$

If $S < X$, the standard coil is oriented normal to the magnetic field while the search coil is rotated to inductively balance it. In the latter case the effective area of the search coil is

$$X = S \csc \theta \tag{2.67}$$

Fine enameled copper wire wound on an accurately machined cylindrical form of bakelite or lucite in a single uniform layer represents the essential elements of a search coil, the effective area of which can be determined to great precision from geometric considerations and simple calculations. Such a coil checked and cross-checked against similar coils by inductive means is suitable for use as a primary standard of area in a magnetic testing laboratory.

The effective area of a winding of N turns in a single cylindrical layer of mean diameter D is

$$A = \frac{\pi D^2 N}{4} \tag{2.68}$$

Here, the mean diameter is measured along a line perpendicular to the axis of the cylinder through the center of the cylinder from center of wire to center of wire. As verified by practice, Equation (2.68) holds true to at least one-tenth of one percent accuracy when the diameter of the wire is small compared to the diameter of the cylinder.

Leads attached to the solenoidal winding of a standard coil are twisted as carefully as possible so as to be non-inductive. Due to the fact that the start and terminus of the winding are separated by the length of the solenoid, one loop is unavoidable. However, for all practical purposes the plane of the loop can be aligned parallel to the magnetic field for normal operation.

Figure 2.16 shows a drawing of a circular solenoidal winding representative of the winding of a standard search coil. Figures 2.17a, 2.17b, 2.17c, and 2.17d show drawings of the component parts and the assembly of a standard search coil form. Holes to accommodate start and terminus leads are shown in Figure 2.17a. After the coil is wound and the leads are attached and twisted, the winding protector of Figure 2.17b is slipped over the spool. The end disk protector of Figure 2.17c serves the two-fold purpose of holding the winding protector in place and providing a protection for the twisted pair of leads coming out of the exit hole of the spool. The twisted pair is wrapped around the winding protector in the grooves provided and is held in place by an elastic band until it is needed.

Figure 2.18 is a photograph of two standard coils, one wound and calibrated, the other disassembled to show bakelite spool, lucite winding protector, and end disk protector. The winding and end disk protectors of the disassembled coil form are of a different type than shown in Figure 2.18 in that the end disk protector has a groove provided in it for the twisted pair of leads while there are no grooves cut in the

winding protector.

In a second method, comparison of an unknown area with a known area is achieved quite easily through the use of a long solenoid with a tapped central, externally located, secondary winding. The search coil to be calibrated is placed inside the solenoid under the centrally located secondary. It is connected in series bucking with the secondary and the number of secondary turns is adjusted to give best inductive balance, i.e. a null reading when current is passed through the long solenoid. The effective area of the search coil is then the product of the number of the secondary turns and the primary area. In this method the solenoid primary winding is the standard coil.

The mutual inductance[5] of the long solenoid and secondary shown in Figure 2.19 is

$$M_o = 4\pi^2 a^2 n_1 n_2 (\rho_2 - \rho_1) + \ldots \tag{2.69}$$

where

$$\rho_1 = \left\{\left(\frac{x - \ell}{2}\right)^2 + A^2\right\}^{1/2} \tag{2.70}$$

$$\rho_2 = \left\{\left(\frac{x + \ell}{2}\right)^2 + A^2\right\}^{1/2} \tag{2.71}$$

$$n_1 = \frac{N_1}{x} \tag{2.72}$$

and

$$n_2 = \frac{N_2}{\ell} \tag{2.73}$$

Only the first term of an infinite series is shown in equation (2.69). This equation may be written in another form

$$M_o = \frac{4\pi^2 a^2 N_1 N_2}{\rho_1 + \rho_2} + \ldots \tag{2.74}$$

with the aid of equations (2.72) and (2.73) and the following mathematical reasoning:

$$\frac{\rho_2 - \rho_1}{x\ell} = \frac{\rho_2^2 - \rho_1^2}{x\ell(\rho_2 + \rho_1)} = \frac{\left(\frac{x + \ell}{2}\right)^2 - \left(\frac{x - \ell}{2}\right)^2}{x\ell(\rho_2 + \rho_1)}$$

$$= \frac{\frac{x^2}{4} + \frac{x\ell}{2} + \frac{\ell^2}{4} - \frac{x^2}{4} + \frac{x\ell}{2}}{x\ell(\rho_2 + \rho_1)} - \frac{\ell^2}{4} \quad \frac{1}{\rho_2 + \rho_1}$$

If A = a and ℓ = o then Equation (2.74) becomes

$$M_o = \frac{2\pi^2 a^2 N_1 N_2}{\left(\frac{x^2}{4} + a^2\right)^{1/2}} + \cdots \tag{2.75}$$

The mutual inductance of the long solenoid and inner search coil shown in Figure 2.20 is

$$M_I = 4\pi^2 B^2 n_1 n_3 (\rho_4 - \rho_3) + \cdots \tag{2.76}$$

where

$$\rho_3 = \left\{\left(\frac{x+m}{2}\right)^2 + a^2\right\}^{1/2} \tag{2.77}$$

$$\rho_4 = \left\{\left(\frac{x-m}{2}\right)^2 + a^2\right\}^{1/2} \tag{2.78}$$

$$n_1 = \frac{N_1}{x} \tag{2.79}$$

and

$$n_3 = \frac{N_3}{m}$$

Equation (2.76) may be written in the form

$$M_I = \frac{4\pi^2 B^2 N_1 N_3}{\rho_3 + \rho_4} + \cdots \tag{2.81}$$

If m = o then equation (2.81) becomes

$$M_I = \frac{2\pi^2 B^2 N_1 N_3}{\left(\frac{x^2}{4} + a^2\right)^{1/2}} + \cdots \tag{2.82}$$

If $M_I = M_o$ then $\pi^2 B^2 N_3 = \pi^2 a^2 N_2$ or $\pi B^2 N_3 = \pi a^2 N_2$. The quantity $\pi a^2 N_2$ is the product of the area of the primary and the number of turns in the outside secondary.

The main design problem here is to determine how large the quantities A and ℓ can be and yet produce no appreciable error in the determination

of the mutual inductance from equation (2.74). Constants of the primary which was constructed are:

X = length of primary = 95.95 cm,

N_1 = number of turns in primary = 680 turns,

a = mean radius of primary = 2.9566 cm,

n_1 = turns per cm of primary = 7.0866 turns per cm.

The primary was wound with 680 turns of number 16 enameled copper wire on a threaded canvas bakelite tube. Constants of the secondary are:

ℓ = length of secondary = 6.00 cm,

A = outside radius of secondary = 3.64 cm,

N_2 = maximum number of turns = 4110 turns.

Calculated quantities associated with the primary are:

H = magnetic field at center of solenoid = 8.902 I oersteds,

I = primary current in amperes,

P_A = primary area = 27.462 cm^2.

Calculated quantities associated with the secondary are:

M = mutual inductance per turn = .024447 millihenries,

M_{max} = maximum M possible = 4110 M = 100.48 millihenries.

With secondary constants of A = 3.64 cm and ℓ = 6.00 cm the error in using equation (2.74) in determination of the mutual inductance is less than one-twentieth of one percent.

A photograph of the apparatus is shown in Figure 2.21. The turns of the secondary winding B about the long solenoid A are adjusted by means of the four dials on the control box D. The search coil is placed inside the primary A, just under the secondary winding B, by means of the coil holder C.

Figure 2.22 shows the coil holder C in greater detail. The leads of the search coil are inserted into the jaws of the gold plated clamps F and are held in place as the clamps are tightened by the screws E.

The search coil and secondary winding are placed in series bucking with a Leeds and Northrup Type R galvanometer as indicated in Figure 2.23, while the turns of the secondary winding are adjusted to give the smallest galvanometer deflection possible as the current is turned on or off in the primary of the long solenoid.

The effective area of the search coil in turn -cm^2 for perfect balance is 27.462 times the number of turns indicated at the control box.

2.05.2 Flux Standards[6]

The quantity ϕ in equation (2.65) is usually determined by comparing the deflection it produces in an instrument with the deflection a flux standard produces in the instrument. Let the flux linkage, ϕ, of a search coil with effective area, A, in a magnetic field, H, be reduced to zero, yielding an instrument deflection, d. The instrument is calibrated by means of a flux linkage standard. A deflection d_s is produced by a flux linkage change ϕ_s. If the quantity $\frac{\phi_s}{d_s}$ is constant throughout the range of the instrument then

$$\frac{\phi}{\phi_s} = \frac{d}{d_s} = \frac{AH}{\phi_s} \qquad (2.83)$$

In general, however, the instrument will depart from linearity. Then Equation (2.83) cannot be assumed. In such cases the situation is improved by bracketing the deflections, d, with flux standard deflections, d_s, and making linear interpolations or plotting a calibration curve for the instrument.

One type of flux standard illustrated in Figures 2.24 and 2.25 (Type I) consists of a tapped coil that is movable from positions of maximum to nearly zero flux linkage with a five inch long cylindrical Alnico bar magnet. Coil A with ten resistance compensated taps, is dropped from position 1 to position 2 under the action of gravity as release mechanism B is operated. The range of flux values covered by this type of instrument is indicated by a few characteristic values:

Flux standard O S

Tap No. 1 16,500 line-turns

Tap No. 10 164,100 line-turns

Flux standard J B

Tap No. 1 248,000 line-turns

Tap No. 10 2,527,000 line-turns

A second type of flux standard (Type II) consists of a rotable coil in the gap of a fairly large Alnico permanent magnet. Stops are provided so that each successive angular throw of the coil changes its flux linkage with the magnetic field in approximately equal increments. Three photographs of this type of flux standard are shown in Figures 2.26a, 2.26b, and 2.26c. The arm, A, is connected by the shaft, F, through the circular board, G, and the yoke of the magnet to the coil, B. The shaft rotates the coil in the gap formed by the two Alnico pole pieces, C. Stops, D, determine the angular throw of the coil. The range of flux covered by this second type of flux standard is 189,000 to 3,290,000 line-turns.

Both of these standards are calibrated by comparing their deflections in an instrument with deflections produced by a standard mutual inductance in the same instrument. Figure 2.27 shows the standardizing circuit. Deflections produced by flux changes in the standard are matched by deflections produced by the mutual inductance for current changes in the primary, after trial and error adjustment of the current. The current is measured with a Leeds and Northrup Type K1 potentiometer across a standard shunt. When deflections are matched, the value of the secondary standard line-turns is given by

$$\phi = 10^5 \, Mi \qquad (2.84)$$

where M is the mutual inductance of the standard in millihenries and i is the current change in amperes.

The probable error in calibrating the secondary standards may be predicted from the error formula

$$X = \pm \sqrt{X_1^2 + X_2^2} \qquad (2.85)$$

where X_1 is the error in calibration of the standard mutual inductance and X_2 is the error in matching deflections.

$$X_1 = \pm 0.25 \text{ percent}$$

$$X_2 = \pm 0.25 \text{ percent}$$

$$X = \pm 0.35 \text{ percent}$$

The value of 0.35 percent probable error is verified in practice.

2.06 Procedures for Obtaining Magnetization Curves

The problem here is to measure the absolute magnetic field intensity in the gap of a magnet as a function of the current flowing in the exciting coils. The method is to record the change of the flux linkage of a search coil in the magnetic field with a ballistic galvanometer or fluxmeter. Four ways of doing this are:

1. While a current is flowing in the exciting coils of the magnet the search coil is pulled out of the gap. The current is then turned off.
2. The search coil is held stationary in the gap while the exciting current is reduced to zero.
3. The search coil is held stationary in the gap while the magnet current is increased from zero to the selected value.
4. While the current is held constant the search coil is rotated through 180 degrees.

Of the procedures listed, the most satisfactory choice is dependent on the magnet characteristics and the type of instrument employed in the measurement.

Suppose that a large direct current generator supplies the exciting current, I, for the magnet. The current is turned on and off by the breaker shown in Figure 2.28. The size of the current is varied by means of the rheostat and switch in the field coil circuit of the generator. The current to the magnet is reduced, first, by lowering the

generator field, and, finally turned off by opening the breaker. The time of rise of I, of course, is dependent on the values of resistance and inductance in the circuit. Figure 2.28 shows a schematic drawing of the control circuit.

2.06.1 Ballistic Galvanometer Method

In Figure 2.29 search coil S is placed in series with a ballistic galvanometer G, variable resistance R, flux standard F, and switch S W. The ballistic galvanometer, G, frequently employed in obtaining magnetization data is a Leeds and Northrup Type P reflecting galvanometer with a sensitivity of approximately 100,000 maxwell-turns per cm deflection and a thirty second period. The external circuit resistance, R, is adjusted to give the most satisfactory galvanometer damping characteristics. The function of the damping switch, D, is to provide a means of either shorting out an unwanted signal from the search coil or to overdamp the movement of the galvanometer coil. The switch, S W, opens the galvanometer circuit. Under the condition of open circuit the galvanometer coil rotates more rapidly than it does under the condition of a low resistance load, a feature which is utilized in resetting to zero.

2.06.2 G. E. Fluxmeter Method

In Figure 2.30 search coil S is placed in series with a G. E. Fluxmeter G, a thermal electric compensator E, a flux standard F, and a resistance K. The fluxmeter, G, usually employed in obtaining magnetization data is a G. E. type 92 fluxmeter with a sensitivity of 67,000 maxwell-turns per cm deflection. In cases where the shunt A is not necessary for reduction of sensitivity, K, the lumped external resistance, is kept as low as possible to hold drift to a minimum.

2.07 Magnetization Curves on Model Magnets

The current densities in the exciting coils of model magnets is

extremely high, sometimes reaching 20,000 amperes per square inch. The insulation begins to burn after the current has been on for 20 seconds, so the usual on-time is limited to about ten seconds.

Of the four procedures listed above, only the first one is suitable for use with the ballistic galvanometer. The signal to the ballistic galvanometer is short and the magnet current is flowing just long enough for the operator to adjust it, read it, and reduce it to zero. Personnel needed are a galvanometer man, a current operator, and a person to pull the search coil out of the gap of the model magnet.

While all four procedures are possible with the G. E. Fluxmeter, the second one is considered most satisfactory. The residual field, though not taken into consideration by this procedure, is usually negligible. Personnel needed are a fluxmeter operator and a current operator. Because this method is now most frequently employed, the cycle of operation will be described in detail with the aid of Figure 2.30. Either photographic or visual readings are possible.

First the breaker is closed, then the generator field current, i, is turned on and adjusted with the rheostat so that the desired value of I is obtained. The fluxmeter operator records his reading upon receipt of a signal from the current operator, or the current operator can take a picture of the fluxmeter reading by depressing the camera release. The fluxmeter operator must keep a close check on the drift of the instrument. To reduce I to zero the current operator opens the switch in the generator field circuit, waits until I drops to about one tenth of peak value, and then opens the breaker. The final reading is recorded either visually or photographically by the fluxmeter operator. This has to be done by the fluxmeter operator because of a small drift which always appears after the current is turned off. Redording of the reading is done after all drift has ceased.

2.08 Magnetization Curves on Full Scale Magnets

Flip coils are used for full scale magnet measurements, other methods in general not being practical. Two kinds of flip coil mounts are shown in Figure 2.31 (Type I) and Figure 2.32 (Type II). Referring to Figure 2.31, level indicators and adjusting screws are denoted by A and B respectively. Variation in sensitivity* is accomplished through selection of search coils of suitable areas or by varying the angle of throw. The protractor can be read to one-tenth of a degree.

A photograph of a Type II mount is shown in Figure 2.32. The square rod, A, that holds the flip coil support, B, is oriented perpendicularly to the magnet pole pieces by means of the leveling screws, C. The whole unit is wedged in place by partially unscrewing the square rod from the base and locking it with nut E. A set of square rods are provided for gaps of various widths. The set screw, F, damps A to B at the proper location.

2.09 Uniformity Measurements on Model Magnets

The magnetic field in the calutron must be uniform over a certain well defined region as indicated in the discussion in Chapter I. The measuring apparatus must be capable of detecting changes in the magnetic field of one-tenth of one percent. Usually the largest changes amounted to about five percent of the field. Hence the maximum deflection of the instrument should amount to five percent of the field.

The general procedure used is as follows. The magnet is excited by the circuit shown in Figure 2.28. During a run the operator holds the exciting current as constant as possible. Variations of one percent in the current during a run are not uncommon, and make it necessary to use

---

* In accurate determinations of the absolute magnetic field intensity only angular throws of 180 degrees are considered satisfactory. Of course, angular throws less than 180 degrees permit fairly accurate magnetic field intensity determinations, but the protractor scale was really provided for cases in which the search coil is employed as a bucking coil in uniformity measurements.

a technique which reduces to a minimum the effect of variations in the exciting current. In order to accomplish this two coils S and T are used, connected in series bucking (Figure 2.33). Coil T is usually slightly larger in effective area than the moving coil S. At the beginning of a run, coil S is placed in the center of the gap as shown in Figure 2.33 and the bucking coil T is fixed at some convenient point in the gap. Then the exciting current is turned on and off. If the fluxmeter deflects, the bucking coil is tilted or a shunt is placed across it and adjusted until no deflection occurs. Once this adjustment is made a run can be started. The moving coil is drawn out of the magnetic field and the corresponding deflections of the fluxmeter are recorded as a function of the position of the moving coil. The deflections of the fluxmeter correspond to the difference between the magnetic field at the starting point and the magnetic field at the other points covered by the motion of the coil. A one percent change in the exciting current produces an error of only one percent in the <u>changes</u> in the magnetic field.

2.09.1 <u>The Search Coils</u>(4)

The search coil, S, must be very small so as to measure the magnetic field at a point rather than to average it over an area. It was desirable to know the magnetic field accurately to within half an inch on the full scale magnet. This corresponded to one thirty-second of an inch on the models. The smallest search coils measured 0.15 inch in height by 0.20 inch in diameter, contained about 2000 turns of number 46 wire and had an effective area of about 350 cm^2. A careful check of typical runs showed that the measurements were accurate to one thirty-second of an inch in spite of the size of the coil. Errors in placing the coil in the gaps of the model magnet were kept to less than a sixty-fourth of an inch.

2.09.2 Electronic Fluxmeter Method[1]

The electronic fluxmeter is especially suitable for uniformity runs because of its extremely short operational cycle and its ability to deliver a continuous record of flux change with distance. Figure 2.33 shows a schematic drawing of the electrical circuit employed in this method.

As the search coil moves from position A to position X along the straight line AX, the contact C slides along the potentiometer. The varying voltage from the potentiometer is amplified and applied to the horizontal plates of the cathode ray tube. The electron beam is deflected an amount proportional to this voltage or to the distance AX.

Figure 2.34 shows two uniformity runs, (the unmarked uniformity run is a repeat run) complete with horizontal fiducial lines and horizontal and vertical sweep calibrations. The picture, taken by a Sept camera on 35 mm film, was enlarged to 8.5 inches by 11.0 inches and copied to give the photograph shown as Figure 2.34.

Figure 2.35 is a photograph of the apparatus employed in moving the search coil along any prescribed straight line path in the gap of a model magnet. Search coil A attached to the pantograph B follows the path of the stylus C in the stylus guide or potentiometer D. The frame of reference represented by the fixed scales E may be adjusted parallel to any chosen frame of reference in the gap of the model magnet by means of adjusting screws F. Pantograph holder G and the board enclosing the frame of reference, E, are rigidly attached to the base plate, H, and adjustment in the direction of the magnetic field is possible by loosening the clamp screws, I, and moving the base plate, H, with respect to the fixed base plate, K. Movable scale L or M, to which is attached the stylus guide, is either fastened horizontally or vertically to the frame of reference, E (M is longer than L since the scales, E, form a rectangle).

A pair of movable scales L and L' or m and M' (not shown) are necessary for diagonal runs.

Figure 2.36 is a close-up view of the stylus guide or potentiometer holder shown in Figure 2.35. Stops O and P (Figure 2.36) determine the starting point and the length of uniformity run being made. The operator moves the search coil quite rapidly through a distance determined by the stops by means of the arm R. Horizontal sweep stop screws, N, with retrieving springs are located one-half inch apart in the brass bar Q. For convenience, usually the stylus guide is adjusted with respect to the movable scale, L, and the stops with respect to the operating arm, R, so that the start of a run corresponds with a stop position determined by one of the screw heads.

The oscilloscope deflection is not linear and the voltage from the sliding potentiometer is not linear. Therefore it is necessary to calibrate each photograph. The stops N in Figure 2.36 are used to calibrate the photographs. The steps followed are as follows. The camera shutter is opened, and the coil is then placed at its starting point. The spot on the oscilloscope is swept vertically across the scope making the first vertical line 0.0 (Figure 2.34). The first stop, N, is depressed and the arm R is moved up to the stop. The coil has then moved a half inch. The spot on the oscilloscope is swept vertically across the scope as before, making the second vertical line 0.5 (Figure 2.34). This is repeated until the set of vertical lines is complete.

Horizontal fiducial lines are made by shorting the input to the fluxmeter and moving the arm R rapidly through its excursion back to the starting point. This is done while the magnet is excited. As soon as the coil reaches its starting point the input is unshorted and the coil swept back through its run.

Vertical sweep calibrations (Figure 2.34) are performed by photo-

graphing the deflection produced by the flux standard. This amounts to 2.43 inches for 82,800 maxwell-turns. This is done twice on each record. The cycle of operation employed in obtaining the record shown in Figure 2.34 will be described by the listing of the following steps:

1. The magnet current is turned on and held steady.

2. The camera shutter is opened.

3. The horizontal fiducial is made by moving the search coil rapidly from position 3.0 to position 0.0 with vertical input to fluxmeter shorted.

4. A run is made by moving the search coil from the position 0.0 to the position 3.0 very rapidly. The pause at 0.0 in steps 3 and 4 is just long enough to permit the vertical input to be unshorted.

5. The magnet current is turned off.

6. The horizontal sweep calibration is performed by sweeping the electron beam across the fluorescent screen for each coil position 0.0, 0.5, . . . , 3.0.

7. Vertical sweep calibration is performed by photographing the flux standard deflections at positions 0.75 and 2.25. Over exposure is avoided through use of an auxiliary external shutter, the operation of which does not advance the film to a new frame.

8. Steps 1, 3, 4, and 5 repeated in order yield a repeat run.

9. The camera shutter is closed.

The 0.5, 1, 2, 3, 4, and 5 percent field variation points are determined from the formula

$$\frac{\Delta H \times 100}{H_o} = \frac{\phi_s}{d_s} \frac{d}{\Delta H_o} \times 100 \qquad (2.86)$$

where

ΔH = change of field strength in coil in oersteds

H_o = field strength at start of run = 6300 oersteds

ϕ_s = flux standard value = 82,800 maxwell-turns

A = effective area of coil = 351.4 turn-cm^2

d_s = fluxmeter deflection recorded = 2.43 inches

d = fluxmeter deflection that corresponds to $A\Delta H$

On the 8.5 by 11.0 inch enlargement the sensitivity of the fluxmeter is $\frac{82,800 \text{ maxwell-turns}}{2.43 \text{ inches}}$ = 34,100 maxwell-turns per inch or 13,420 maxwell-turns per centimeter. Since the thickness of the trace (heavy part) is about 0.06 inch, data is resolvable to at least

$$\frac{34,100 \times .06 \times 100}{351.4 \times 6300} = 0.09 \text{ percent}$$

change of magnetic field.

Figure 2.37 shows a photograph of a search coil with effective area of 351.4 turn-cm^2 mounted in its holder.

2.09.3 G. E. Fluxmeter Method[2]

The G. E. Fluxmeter is especially suitable for uniformity measurements on model magnets when the search coil is moved in steps from one point to another in the magnetic field. At the end of each deflection the torques on the moving element are in equilibrium, a property not characteristic of either the electronic fluxmeter or the ballistic galvanometer.

Figure 2.38 shows the circuit employed in this method. The circuit is identical with the circuit shown in Figure 2.30 except for the bucking coil and the shunting resistor R across it.

Figure 2.39 shows the small search coil A mounted on one end of the pantograph B. The other end is attabhed to a rack, C, which is moved by a one-tooth pinion, E, shown in Figure 2.40. This pinion moves the pantograph arm during 180 degrees of revolution and for the remaining 180 degrees the arm and the coil remain stationary. The pinion is rotated by means of a flexible cable, D, and a small crank, F (Figure

2.41). A cam integral with the crank closes a microswitch, G, while the coil is stationary. The microswitch excites the solenoid puller for the Sept camera and it photographs the fluxmeter (Figure 2.42).

A clamp placed on the rack limits the travel to the required number of steps. The check readings are made by manually pushing the rack back and forth between the end stops and photographing the readings by the manually operated switch C'.

Typical constants are as follows:

Effective area of search coil	= 200 turn-cm^2
Diameter of search coil	= 0.20"
Height of search coil	= 0.15"
Sensitivity of fluxmeter	= 67,000 maxwell-turns per cm
Cycltron field strength	= 15,000 oersteds
Deflection for 0.1 percent or 15 oersteds	= 0.45 mm

Since the readings are photographed they can be read with an accuracy of 0.1 mm. This corresponds to a change in the main field of 0.025 percent. Errors due to drift amount to about 0.1 mm. The resistance of the search coil is about 500 ohms and a fluxmeter of twice this sensitivity could be used with no loss in the speed with which readings can be made. However, as pointed out in the discussion of the theory of the fluxmeter, drift due to spurious electromotive forces would be increased and the added care necessary makes the present arrangement probably the most satisfactory. Flux standard readings are made on the same film and each run performed twice as a check.

2.10 Uniformity Measurements on Full Scale Magnets

Two handicaps encountered in performing uniformity measurements associated with small geometry and unsteady current conditions in model work are not present in full scale work. First of all, it is easier to

satisfy the criterion that the average magnetic field in the space occupied by the search coil is the magnetic field at the center of it, within the experimental error associated with the instruments, in full scale magnets than it is with model magnets. This fact makes possible construction of physically larger search coils with low resistances and large effective areas, and employment of less sensitive flux recording instruments. Secondly, magnet current regulation, being possible to at least one-tenth of one percent because of oil cooling of the magnet coils, permits long and extensive measurements under the conditions of time-invariant magnetic fields.

In general, apparatus designed to move the search coil along a prescribed path in full scale work is bulky and hence time consuming in set-up. Sometimes it must be designed for use in vacuum in order to disclose information that may be influenced by movement of magnetic components under atmospheric pressure. Occasionally an accurate description of the shape of the lines of force in a localized region is required. In order to meet the general demands of full scale uniformity measurements three types of apparatus were developed.

2.10.1 Contour Mapping Device

Figure 2.43 shows the search coil, flip coil, and bucking coil in a conventional G. E. Fluxmeter circuit like the circuits shown in Figures 2.30 and 2.39. During the time the measurements are being carried out, the flip coil (See Figure 2.32) is held stationary in the field after it has been used to establish the operating field $H = H_o$.

Suppose the search coil starts from a point A where $H = H_o$ and moves to a point P where $H = 0.99\ H_o$. Then the fluxmeter deflects an amount, d, which corresponds to a one percent change of field strength. The locus of P where $H = 0.99\ H_o$ is the one percent contour line. As the search coil moves along this contour line no fluxmeter deflection

occurs.

In Figure 2.44 an image of the collimating slot A appears on the scale B as light originating from bulb C passes through the collimating slit and the focusing lens D and is reflected from the fluxmeter mirror E. A photocell, F, located at the center of the scale receives light and generates a signal as long as the fluxmeter is reading mid-scale to within the width of the image of the collimating slot.

Figure 2.45 shows the search coil in the magnetic field to be explored. It is mounted on a lucite base which is separated from a metal sheet by tracing paper. Figure 2.46 shows the output of the induction coil connected across the metal sheet and a wire tip just beneath the center of the search coil. Legs with rounded tips are provided in order that the lucite mount can be moved easily and smoothly about on the tracing paper. Whenever the image of the collimating slit falls on the photocell, sparking occurs through the tracing paper from the wire to the metal plate.

If the fluxmeter zero, for the search coil located in a field of strength $H = H_0$, were set at a deflection distance, d, that corresponds to a one percent change of field, then when the coil is moved to the one percent contour a spark would jump from the wire through the paper to the metal sheet, leaving a burnt hole in the paper. Other points on the one percent contour can be obtained by trial and error until enough are obtained to show a smooth continuous curve. The two percent contour line is obtained in a similar fashion except that the coil starts from the one percent contour instead of from the uniform field.

A simple method will now be described for obtaining fluxmeter deflections that correspond to the 0.5, 1.0, 2.0, 3.0, 4.0, etc., percent changes of field. The field strength in the gap of a magnet as measured

with a flip coil is

$$H_o = \frac{\phi_s}{d_s} \frac{d_f}{2A_f} \tag{2.87}$$

where

$\frac{\phi_s}{d_s}$ is the line-turn sensitivity of the fluxmeter;

d_f is the deflection of the fluxmeter for a 180 degree flip;

A_f is the effective area of the flip coil.

The difference in the field strengths between two points in the non-uniform field as measured with the search coil is

$$\Delta H = \frac{\phi_s}{d_s} \frac{d}{A} \tag{2.88}$$

where

d is the deflection of the fluxmeter that follows as a result of translating the search coil from one point to the other and A is the effective area of the search coil.

The percent change in field strength between the two points under consideration is

$$\frac{\Delta H \times 100}{H_o} = \frac{d}{d_f} \frac{200\ A_f}{A} \tag{2.89}$$

Suppose the condition is imposed that $d = d_f$ for a one percent change of field, Then $A = 200\ A_f$. This condition can be realized quite easily by adjusting the turns of the search coil.

Operation of the contour mapping device is described by the listing of the following steps:

1. After the search coil is located in the uniform field, the fluxmeter zero is adjusted to mid-scale. Sparking occurs.
2. A deflection corresponding to 0.5 percent change of field occurs as the flip coil is turned through 90°.
3. The search coil is moved to the 0.5 percent contour. Sparking occurs if the polarity of the search coil

is correct.

4. The operator who moves the search coil hunts for additional points on the 0.5 percent contour.
5. The 0.5 percent contour is checked frequently against the deflection produced by the ninety degree throw of the flip coil.
6. As soon as enough burnt holes are present in the paper to distinguish the contour line, the operator returns the search coil to the uniform field.
7. A deflection corresponding to one percent change of field follows as the flip coil is turned through 180°.

The process continues until all the contours desired are plotted. Frequent check of drift is made as well as check of calibration.

Typical constants are listed as follows:

$A = 20{,}000$ turn-cm^2

$A_f = 100$ turn-cm^2

$\frac{\phi_s}{d_s} = 67{,}000$ line-turns per cm deflection

$H_o = 3000$ oersteds.

From Equation (2.87)

$$d_f = \frac{2 \times 100 \times 3000}{67000} = 8.96 \text{ cm.}$$

Thus the deflection, d, for one percent is $d = d_f = 8.96$ cm. The resolving power of the photocell is about 0.30 cm or $\frac{0.30}{8.96} \times 1 = 0.03$ percent change of field.

2.10.2 <u>Box Car Technique</u>

The circuit employed is the conventional circuit containing search coil, bucking coil, flip coil, G. E. Fluxmeter, thermal e.m.f. compensator, and flux standard. Point by point determination of the uniformity of the magnetic field along straight lines is accomplished by moving a car supporting the coil in steps along a track. Readings are photographed

by closing a microswitch just before moving the coil each time.

Figure 2.47 shows a knurled knob, A, on the end of a long shaft upon which are mounted many stops. Car C is moved along the track away from the operator by pulling line D or it is moved along the track toward the operator by pulling line E. In the photograph a small clockwise motion of the knurled knob would cause a stop to be rotated into position. At that point a tooth and gear arrangement prevents further motion of the knob A. Now line D is pulled and the car moves the distance between stops of one inch. To obtain a further motion of the car the operator of the device must push down on the machine screw, H, that depresses the microswitch, I, to permit further rotation of the knurled knob. Depressing the microswitch sends a surge of current through the solenoid puller that operates the camera release. After the knurled knob is rotated to the next position set by the gear and tooth arrangement the car may be moved another inch and so on. It is possible to turn the knurled knob to a position where the car can be moved along the entire length of the track without stopping for resetting purposes.

2.10.3 Mercury Arc Tube

Figure 2.48 shows a sketch of a mercury arc tube that can be used to determine the shape of the lines of magnetic force in a localized region. Electrons emitted from the filament A are accelerated by the anode B to form a diffuse glow in the evacuated glass tube C. The glow occurs as the electrons, bombarding atoms of mercury vapor arising from the mercury drop D, excites them into radiation.

When the tube axis is located along a magnetic field the diffuse glow sharpens into a tight beam, the cross-section of which has the shape of the hole in the anode, with very sharp boundaries. This phenomenon occurs since the electrons intially directed along the axis

of the tube cannot travel perpendicular to the lines of force. Deviation of the lines of force from a straight line perpendicular to the pole pieces from which the magnetic field emanates can be plotted from readings taken on a cathetometer.

2.11 Stray Field Measurements

Fairly extensive measurements of stray fields of model magnets are necessary to determine forces on ferromagnetic materials located near the full scale prototype. The question may arise, for example, how much the reading of an ammeter is affected a given distance away from the magnet. In some cases only the direction of the stray field is required. A satisfactory answer to the problem lies in the determination of both magnitude and direction of the magnetic field at each point in question.

Fine iron filings located on a horizontal sheet in the stray field around a model magnet will arrange themselves along the lines of force if the sheet is gently tapped, and produce a satisfactory pattern in a range limited by the rate of change of the magnetic field. In a region of sharp iron corners a gap in the pattern occurs because the iron particles are pulled to the iron and accumulate there. However, stainless steel filings (being slightly magnetic), sprinkled in this area, will arrange themselves along the lines of force without accumulation. Stray field patterns, altered by changes in magnet current, must be obtained for each operating condition.

A white sheet of paper mounted on a horizontal board that fits the contours of the model magnet provides an excellent background for the filings in photography. However, as the usual photographic process includes formation of an image on film, develppment of negative, and enlargement, the record is not immediately available. An alternative method has been developed for obtaining a permanent record of an iron

filing pattern.

A large sheet of sensitized paper (Bruning B and W direct printing black line paper) is placed on the horizontal board in subdued light. After the magnet current is adjusted and held steady the sheet is gently tapped so that a pattern of stainless steel and iron filings is formed. Flood lamps are turned on for approximately ten seconds and then turned off leaving the sensitized paper in subdued light again. The magnet current is turned off and the iron filing pattern rearranges itself to a pattern characteristic of a low field. As soon as the sensitized paper is cleared of filing it is rolled up, taken to a blue printing machine, developed, and dried in a few minutes. It is then available as an aid in obtaining stray field intensity measurements.

Normal procedure has been to make field strength measurements with a search coil and General Electric Fluxmeter while the permanent filing pattern record is in place. Normally a stray field run is made along a straight line. In all cases the search coil is oriented at the time of reading with the plane of its effective area normal to the lines of force. While the magnet current is held steady the search coil is flipped at a number of positions in succession along the straight line until the run is completed. All pertinent data is written on the record, including the calculated magnetic field intensities.

2.12 Magnetic Tests in Process Tanks

Before the first race track in the Alpha plant was put into operation, tests of the magnetic field were made to determine whether or not the theoretically specified fields were obtained (See Volume IV of the Radiation Laboratory Contribution to the Manhattan Project Technical Series). There were two regions of the tank which were investigated, namely, the regions between the linear shims and the region of the source. Two magnetic measuring devices were designed especially to

afford rapid magnetic surveys of these regions of the tanks.[7] We shall refer to these devices as the shim region device and the source region device. The equipment was designed and built at the Radiation Laboratory and shipped to Oak Ridge in the Summer of 1943 for the tests. The tests were carried out by Radiation Laboratory personnel with the assistance of the personnel from Tennessee Eastman Corporation and Stone and Webster Engineering Corporation. No attempt will be made to go into detail regarding the mechanical construction of these devices. However, the component parts of each piece of equipment and the function of each part will be considered briefly. In the discussion we shall make use of a rectangular coordinate system with the X-axis in the direction of the source-receiver line, the Z-axis in the direction of the homogeneous magnetic field and the Y-axis directed into the tank.

2.12.1 The Shim Region Device

This device consisted essentially of three component parts, arcs of coils, a flip coil and a roving coil. All of these parts were attached rigidly to a face plate in order to allow their use with the tank under vacuum. In practice the tank needed only to be pumped down to a fraction of a pound per square inch in order to carry out the measurements. At this pressure the shims are essentially in the position they assume under operating conditions.

Actually there were three arcs of coils located in the median and the $Z = \pm 8$ in. planes respectively of the tank ($Z = 0$ is taken in the median plane). Each arc of coils consisted of 30 coils which were arranged at equal intervals in X along the arc of a circle of radius 48.15 in. (See Figure 2.49). The supporting mechanism was so arranged that these arcs of coils could be moved as a unit in the Y direction. In the initial position the circles of coils passed through the source and the receiver locations since the diameter of the circles was equal

to the distance between these positions. Each coil had its axis parallel to the Z axis and all of the coils in any one arc were connected in series with a galvanometer, so that when the coils cut the magnetic flux a measurement of this change was given by the galvanometer reading.[6] The range of positions of the arcs of coils in a tank is indicated in Figure 2.49. The entire unit could be moved in the Y direction by means of an external motor control in jumps of 0.8 in. Each arc of coils was moved from its 0 position into the tank a total of 31 or 32 jumps and the galvanometer reading corresponding to each jump was recorded photographically. Normally three runs were made in each tank with the galvanometer connected successively to each of the three arcs of coils. The nature of the equipment can be visualized by referring to Figures 2.50 and 2.51.

The object in placing the coils along an arc of a circle which approximated the path of an ion going from the source to the receiver was to give an approximate measure of the quantity $\int h_z dx$ around the orbit. This integral is proportional to the X displacement at the receiver.[8] In this way a comparison could be made with the values of the displacement expected from the theory.

The flip coil consisted of single coil which could be rotated through 180°, located at a given point in the median plane of the tank. One purpose of this coil was to standardize the galvanometer deflections from tank to tank. A fixed galvanometer deflection was taken as standard and the deflection of the flip coil was adjusted to this standard for each tank by means of altering the resistance of the galvanometer circuit.

The roving coils[9] were single coils with their axis in the Z direction, one in each of the planes of the arcs of coils. They could be moved along a circle of radius 49.4 in. in jumps of approximately 3

in. (See Figure 2.52). The coils were connected in series with their respective arcs of coils, the flip coil, and the galvanometer. The galvanometer deflections for the 3 in. jumps were recorded photographically. The movement of the coils along the circular arcs was controlled from outside the tank by an electric motor through a screw arrangement. A counter attached to the device read 8 revolutions per 3 in. ($3^{\circ}28.77'$) jump of the coil.

It was the function of the roving coil to aid in properly positioning the curve obtained from the reading of the arcs of coils with respect to the theoretical comparison curves. This was thought to be necessary at first because of the fact that the 0 or initial position of the arcs of coils was such that some of the coils were in the inhomogeneous field. This meant that the flux cut by the arc of coils in traveling from the homogeneous field to the 0 position was not taken into consideration in the arc of coils reading.

In carrying out the measurements in the region of the shims, the first step consisted in testing the separation of the shims and of the tank pads with a measuring rod. This being done, the arcs of coils unit was placed in the tank and the tank evacuated. After a satisfactory vacuum had been obtained, flip coil readings were made and the resistance of the galvanometer circuits adjusted to obtain the standard deflection on the photographic film or visual scale. These particular deflections depended upon the area of the particular flip coil in use. Tables and graphs were available for the determination of the necessary change in resistance for any particular deflection. The final readings of the flip coil deflections were recorded photographically, as were also readings taken with a Hibbert magnetic standard made for the purpose of determining the absolute values of the magnetic field in the tank. Further flip coil readings were also taken after making the runs

with the arcs of coils. Following this, runs with the arcs of coils were made in the left, center, and right planes (median and ± 8 inch planes).

The data obtained from the arcs of coils measurements was in the form of data sheets and photographs of galvanometer deflections produced by the coils. An example of an arc of coil measurements is given in Figure 2.53. The heavy black dots on the sides are used to indicate when the readings are to be taken with a positive or negative sign. If the readings lie between the heavy dots and the 0 readings they are taken to be positive, otherwise negative. The top part of each photograph is devoted to the Hibbert standard readings.

The first step in the interpretation of the data was the reading of the galvanometer deflections from the photographs. The readings were made to the nearest 0.1 millimeter and were totaled successively. Once the sum of the galvanometer deflections had been obtained, it was possible to plot the curve of the $\int h_z dx$ for each plane. This curve was plotted on tracing graph paper with the same scales used for the theoretical comparison curves. A reproduction of such a curve is shown in Figure 2.54. Standard comparison curves were available for the ± 8 inch; ± 7-3/4 inch; and ± 8-1/4 inch planes. The magnetic field was then checked by observing the fit of the experimental curves to the theoretical curves by the use of an illuminated screen. The principal difficulty in carrying out the comparison of theoretical and experimental curves arose from the fact that there was no unique way of comparing the curves, i.e., there was no unique way of placing the experimental curves on the theoretical curve for comparison. It had been decided before making the measurements at the plant that the roving coils would not determine the value of the $\int h_z dx$ for the initial position of the arcs of coils with sufficient accuracy. In tests made

on the XA unit in Berkeley it was found that the errors in the measurements with the roving coil were large and unsystematic and that the device was of little use in helping to decide whether the field was satisfactory or not. Consequently, the roving coils arrangement was not used in the measurements at the plant.

It had been determined upon theoretical grounds that in order to have the focal pattern of the beam limited to a one-half mass unit spread from its theoretical width it was necessary for the values of the quantity $\int h_z dx$, experimental and theoretical, to differ by less than 3 cms, in terms of galvanometer deflection. This implied that the curves must be compared in some definite manner. In view of the uncertainty regarding the actual placement of the 0 on the vertical scale of the experimental curves, the method of fitting may appear to be somewhat arbitrary. However, on the basis of tests made in the XA units in Berkeley, the method was believed to be satisfactory in deciding whether or not a given tank passed the theoretical criteria.

The method used is essentially the following. Keeping the first few points of the curves together, the curves were adjusted vertically with respect to one another in such a manner as to distribute the discrepancies between them. The first few points refer to the sums of the galvanometer deflections when the arcs of coils are nearest the mouth of the tank. Once the curves have been fitted together with the best possible distribution of the differences and with the initial points coinciding, the remaining portions of the curves were checked to see if they deviated from one another by more than 3 cms. Various distinguishing features of the experimental curves such as flaring in certain regions, bulging of the peaks, etc. were also noted.

2.12.2 <u>The Source Region Device</u>(7)

The second large piece of equipment used in making magnetic surveys

of tanks was a device designed to test the quality of the magnetic field in the region of the source. This unit was made up essentially of three parts: the source exploring coil, or swinging gate unit, the flip coil, and the center line device. The unit was also provided with a mercury arc. The entire unit was mounted on a face plate so that any part of it could be used with the tank under vacuum. The source search coil unit was comprised of a single search coil which could be moved in a number of directions in order to investigate the character of the magnetic field in the vicinity of the source. This search coil could be moved in the Z direction at any point in the XY plane from plus $61^{\circ}\ 41'$ to -6°, measured with respect to the Y axis with the origin located at the point M of Figure 2.55. Radial motions were possible along any radius through the Z axis as well as motions along arcs of circles with centers on the axis. The network of positions which could be covered is shown in Figures 2.55 and 2.56. The motions were controlled by an electric motor through a screw arrangement from outside the tank. Figures 2.57 and 2.58 are included to show the general appearance of the equipment.

The radial runs were made for the purpose of measuring the quantity dh_z/dr, where r represents the distance along a radius. In this way the field h_z at one point can be related to the field at some other point in the same plane. The arc runs gave the values of $dh_z/d\xi$ where ξ represents the distance measured along an arc. Finally, the runs in the Z direction were made for the purpose of measuring the quantities dh_z/dz. The manner in which these quantities enter into the theoretical consideration is discussed in Chapter III of Volume IV.

The flip coil unit consisted of a coil at the end of a supporting rod which could be rotated about the point F in Figure 2.55. The rotation was from $-5^{\circ}\ 11'$ to 45°, as measured with respect to the Y

direction. The coil could be rotated through 180° about the axis of the supporting rod so as to measure the magnetic field strength at the point where it was located. The flip coil measurements were usually made at the point designated Z in the figure, the same point at which the flip coil readings were made with the shim region exploring device. This provided a means of linking together the measurements made by these two exploring devices. Included with the flip coil device was a search coil attached to the rod supporting the flip coil. This search coil could be moved along the rod so as to measure changes in the z-component of the magnetic field.

The center line device consisted of a search coil which could be moved in 2 inch jumps along the center line of the tank in any one of 9 planes. (See Figure 2.55). The tank center line in the median plane was parallel to and 5.225 inches from the middle plane or axis of symmetry of the arc of coils device.

The mercury arc unit was similar to that described in section 2.10.3. The device enables one to see if the magnetic field was tilted. The tube was located near the receiver so that when the face plate was turned end for end the tube assumed a position with its axis along the Z direction and at the position of the actual source. It was intended to use this device only when the measurements with the source device indicated the need of a closer study of the magnetic field in the source region.

In the use of the source testing device the procedure consisted first of taking measurements with the flip coil, as in the case of the arc of coils, except that the flip coil reading was adjusted to a different standard deflection. Following this the excursions of the search coils were made, starting at the point designated as M_0 in Figure 2.56. It was first moved to point A, and then from A to point

Z in 21 jumps, the deflection for each jump being recorded photographically. The coil was next returned to A, moved to B, and the second radial run from B to C was made also in 21 jumps. Following this the coil was moved back to V_o, thence to P_o and the first arc run from P_o to W_o in 3 jumps was carried out. The coil was then returned to P_o, moved to O_o, and the arc run from O_o to X_o was made in 3 jumps. The same procedure was carried out for the 3rd arc run N_o to Y_o. Altogether 2 radial runs and 3 arc runs were made in the median plane, giving a total of 51 readings. Next, three arc runs were made in the planes 8 inches on either side of the median plane. Finally 4 runs in the Z direction were made at points V_o, U_o, T_o, M_o, each run consisting of 8 2-inch jumps between the +8-inch and -8-inch planes.

In the interpretation of the runs(7)(10) with the source search coil, it was not necessary to plot curves for comparison purposes. All of the information for each tank could be entered on a data sheet and the criteria for satisfactory tank performance then applied. The data sheets were so designed that the theoretical criteria concerning the performance could be applied by the use of a template which could be laid over the data sheets. Numbers on the template gave the maximum differences allowed between the numbers on the data sheets left uncovered by the template. These maximum values were obtained from the theory.

On the assumption that the focal pattern must not disagree by more than one-half mass unit with the theoretical pattern it was decided that the variation of the Z component of the field between 2 points in the neighborhood of the arc 1 inch apart in the direction of an arc run with the search coil must be less than 0.2 percent of the homogeneous field. The variation in the Z component of the field between any 2 points in the neighborhood of the source and 1 inch apart in the Z

direction was to be less than 0.1 percent of the homogeneous field. These criteria when translated into terms of the maximum allowable galvanometer deflection differences were the ones entered upon the templates. From the magnitude of the magnetic field at the flip coil and network of search coil measurements made in the source region it was possible to determine the actual value of the magnetic field for enough points to give an adequate picture of the character of the field in this region.

REFERENCES

1. Electronic Fluxmeter, by E. Plesset. UCRL Report RL 16.6.14.

2. The General Electric Fluxmeter, by Wilson M. Powell. UCRL Report BP-28.

3. Magnetic Balance for Measuring Low Permeabilities, by G. Brown, J. DePangher and W. M. Powell. UCRL Report RL 27.6.17.

4. Areas of Search Coils, by J. DePangher, M. Hammond and M. Seegmiller. UCRL Report RL 27.6.11.

5. Tables for Computation of Self and Mutual Inductances by Rosa and Grover, Bulletin of the National Bureau of Standards, Vol. 8, p. 57, January 1912.

6. Calibration of the Hibbert Magnetic Standard Using a Standard Mutual Inductance, by E. Stearns. UCRL Report RL 27.6.10.

7. Use of Muriel and Cedric in Checking Magnetic Fields, by A. Guthrie. UCRL Report RL 27.7.19.

8. Design of Magnetic Shims, by A. Guthrie. UCRL Report RL 16.6.17.

9. The Roving Coil on Muriel, by A. L. Latter. UCRL Report RL 27.6.18.

10. Acceptance Criteria for the Measurements with Cedric-J, by A. L. Latter. UCRL Report RL 27.6.16.

VOLUME II, CHAPTER II

Figure Captions

Fig. 2.1 Ballistic Galvanometer Circuit.

Fig. 2.2 Basic Circuit for Electronic Fluxmeter.

Fig. 2.3 Circuit for Electronic Fluxmeter with Oscilloscope.

Fig. 2.4 Photograph of Electronic Fluxmeter with 9 In. Cathode Ray Tube. (Mag 336)

Fig. 2.5 Electronic Fluxmeter with Camera Holder in Operating Position. (Mag 334)

Fig. 2.6 Electronic Equipment in Chassis of Electronic Fluxmeter. (Mag 335)

Fig. 2.7 Fluxmeter Circuit.

Fig. 2.8 Optical System for Fluxmeter.

Fig. 2.9 Typical Appearance of Scale When Photographed.

Fig. 2.10 Fluxmeter and Objective Lens Mount. (Mag 321)

Fig. 2.11 View of Light Source, Fluxmeter and Objective Lens. (Mag 322)

L = Light source

F = Fluxmeter

O = Objective lens

Fig. 2.12 View of Camera, Condenser Lens and Scale. (Mag 324)

S = Scale

C_2 = Condenser lens

K = Sept camera

P = String going to solenoid puller

Fig. 2.13 Principle of Operation of Balance.

Fig. 2.14 The Two Types of Solenoid Measurements Involved

Case I: Air Cores in Both Coils

Case II: Air Core in Coil No. 1, Stainless Steel Core in Coil No. 2

Fig. 2.15 Calibration Curve for Magnetic Balance

Fig. 2.16 Circular Solenoid Winding as Used in Standard Search Coil.

Fig. 2.17 Parts and Assembly of Standard Search Coil Form.

Fig. 2.18 View of Standard Coils with One Disassembled to Show Components. (Mag 276)

Fig. 2.19 Long Solenoid with Short Secondary Outside.

Fig. 2.20 Long Solenoid with Short Secondary Inside.

Fig. 2.21 General View of Apparatus Involving Use of Long Solenoid to Calibrate Search Coils. (Mag 196)

Fig. 2.22 View of Coil Holder. (Mag 197)

Fig. 2.23 Electrical Connections for Solenoid Method of Calibrating Search Coils.

Fig. 2.24 General View of Flux Standard. Type I. (Mag 258)

Fig. 2.25 View Illustrating Method of Operation of Flux Standard.

Fig. 2.26 Views of Flux Standard. Type II. (a. Mag 326, b. Mag 327, c. Mag 325)

Fig. 2.27 Standardizing Circuit for Flux Standards.

Fig. 2.28 Schematic Drawing of Control Circuit Used in Obtaining Magnetization Curves.

Fig. 2.29 Schematic Drawing of Electrical Circuit for Ballistic Galvanometer Method of Obtaining Magnetization Curves.

Fig. 2.30 Schematic Drawing of Electrical Circuit for Using General Electric Fluxmeter in Obtaining Magnetization Curves.

Fig. 2.31 Flip Coil Mount. Type I. (Mag 203)

Fig. 2.32 Flip Coil Mount. Type II. (Mag 323)

Fig. 2.33 Schematic Drawing of Electrical Circuit for Electronic Fluxmeter Method of Making Uniformity Measurements.

Fig. 2.34 Two Uniformity Runs with Electronic Fluxmeter.

Fig. 2.35 Apparatus for Moving Search Coil Along Any Prescribed Straight Line Path in Gap of Magnet. (Mag 201)

Fig. 2.36 Close-up of Stylus Guide. (Mag 202)

Fig. 2.37 View of 351.4 Turn-cm^2 Search Coil Mounted on Its Holder. (Mag 316)

Fig. 2.38 Schematic Drawing of Electrical Circuit Used with General Electric Fluxmeter for Uniformity Measurements.

Fig. 2.39 Search Coil (A) and Pantograph (B) - G.E. Fluxmeter Method. (Mag 312)

Fig. 2.40 Details of Rack and Pinion - G.E. Fluxmeter Method. (Mag 318)

Fig. 2.41 Details of Crank (F) and Flexible Cable (D) for Rotating Pinion - G.E. Fluxmeter Method. (Mag 319)

Fig. 2.42 View of Sept Camera and Fluxmeter - G.E. Fluxmeter Method. (Mag 333)

Fig. 2.43 Schematic Drawing of Electrical Circuit Used in Connection with Contour Mapping Device.

Fig. 2.44 Optical System - Contour Mapping Device.

Fig. 2.45 View of Search Coil in Field to be Explored - Contour Mapping Device. (Fig. 5A of Daily Log (Z Group) August 7, 1944)

Fig. 2.46 Apparatus for Recording Points on a Contour - Contour Mapping Device. (Fig. 5B of Daily Log (Z Group) August 7, 1944)

Fig. 2.47 View of Box Car Used in Making Uniformity Measurements. (Mag 328)

Fig. 2.48 Mercury Arc Tube.

Fig. 2.49 Location of Shim Device Measurements in Alpha-I Tanks.

Fig. 2.50 View of Shim Region Device I. (Mag 121)

A = Arc of coils B = Face plate

Fig. 2.51 View of Shim Device II (Mag 108)

A = Coil in arc of coils

Fig. 2.52 Schematic Drawing Showing Location of Roving Coil Measurements.

Fig. 2.53 Example of Arc of Coils Photographed Data.

Fig. 2.54 Example of Experimental $\int h_z dx$ Curve.

Fig. 2.55 Location of Source Device Measurements in Alpha-I.

Fig. 2.56 Details of Source Region Device Showing Location of Measurements.

Fig. 2.57 General View of Source Region Device. (Mag 118)

Fig. 2.58 Close-up of Portion of Source Region Device. (Mag 76)

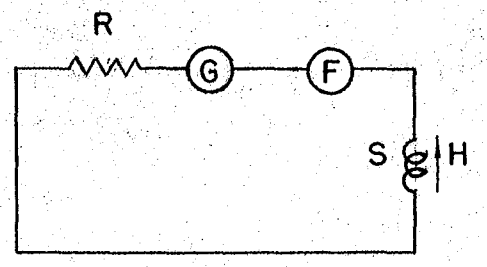
R
G
F
S
H

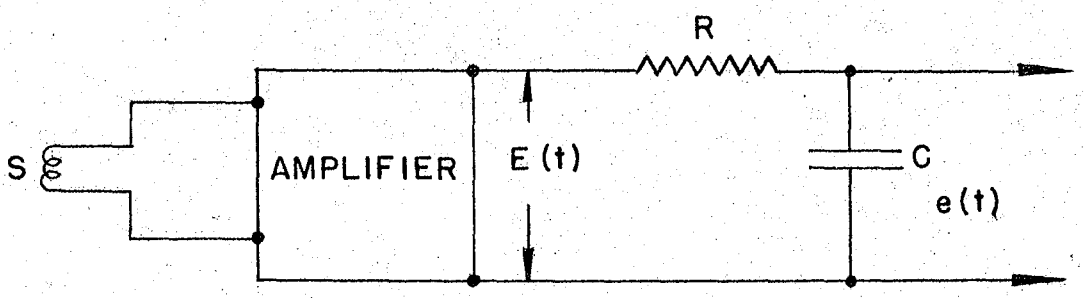
R
S
AMPLIFIER
E (t)
C
e (t)

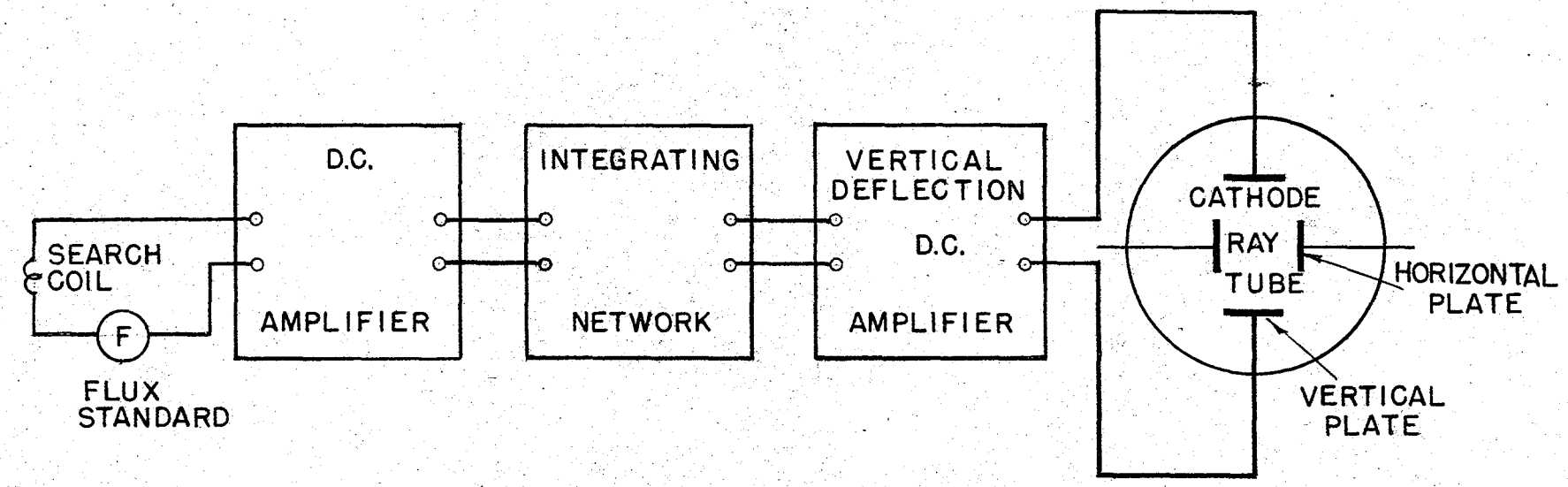
SEARCH COIL
F
FLUX STANDARD
D.C.
AMPLIFIER
INTEGRATING
NETWORK
VERTICAL DEFLECTION
D.C.
AMPLIFIER
CATHODE
RAY TUBE
HORIZONTAL PLATE
VERTICAL PLATE

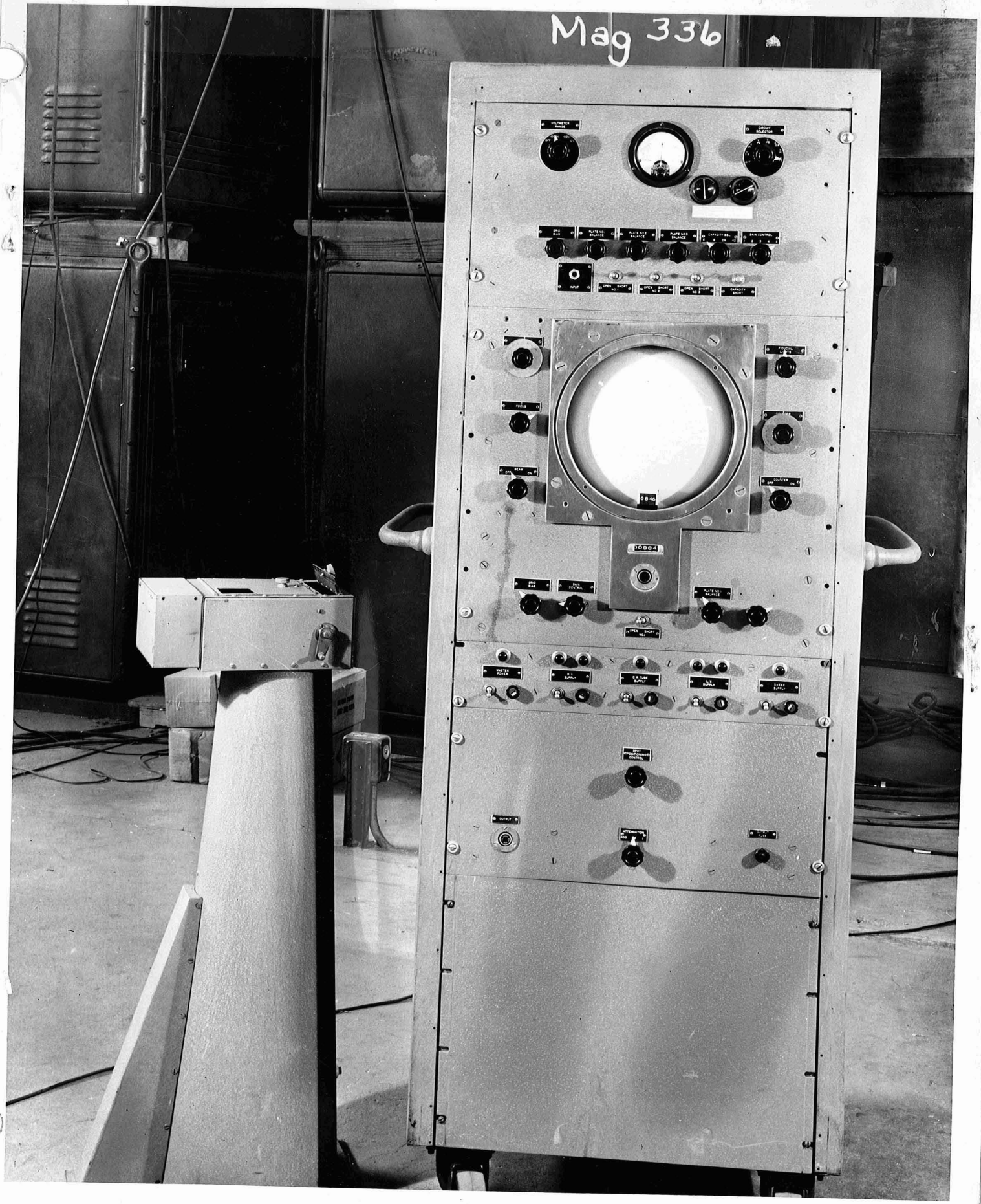
Mag 336
VOLTMETER RANGE
CIRCUIT SELECTOR
GRID BIAS
PLATE NO. BALANCE
PLATE NO. 2 BALANCE
PLATE NO. 3 BALANCE
CAPACITY BAL.
GAIN CONTROL
INPUT
OPEN - SHORT NO. 1
OPEN - SHORT NO. 2
OPEN - SHORT NO. 3
CAPACITY SHORT
FOCUS
BEAM OFF ON
COUNTER OFF ON
6846
10884
GRID BIAS
GAIN CONTROL
PLATE NO. BALANCE
OPEN - SHORT NO. 1
MASTER POWER
D.C. SUPPLY
D.C. TUBE SUPPLY
D.C. SUPPLY
SWEEP SUPPLY
SPOT POSITIONING CONTROL
OUTPUT
ATTENUATION DB
SWEEP RATE

Fig 2.4

Mag 334

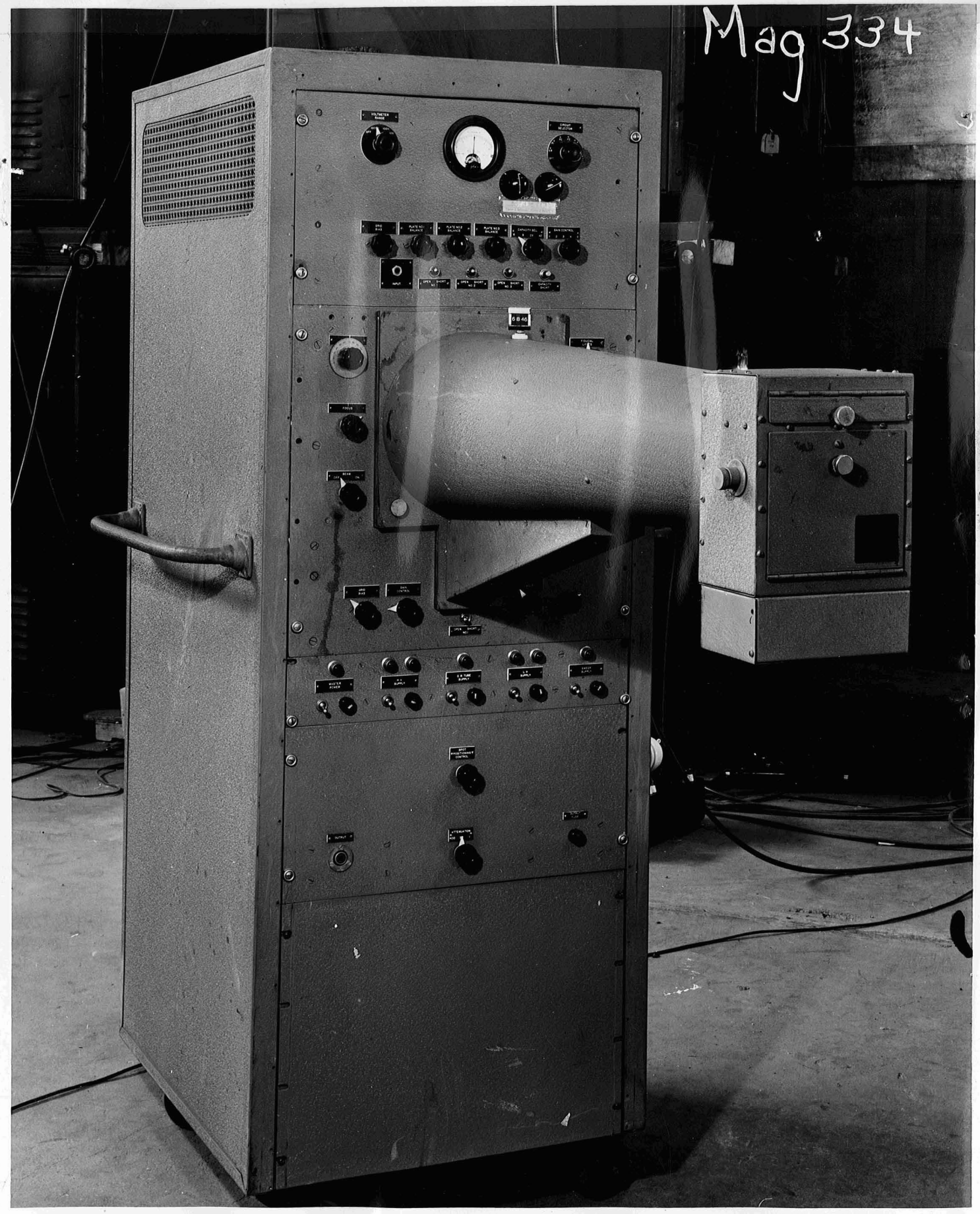

Fig 2.5

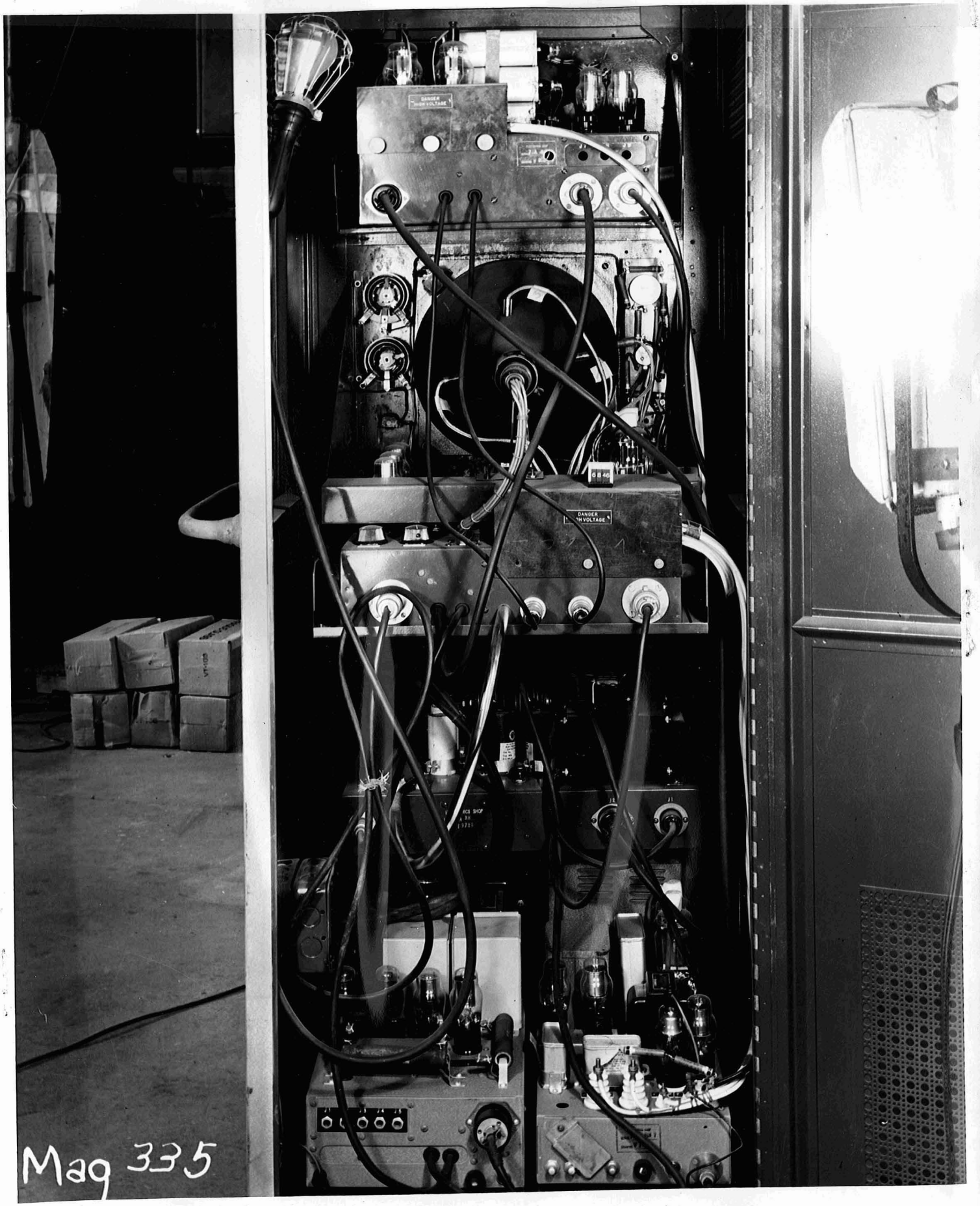

Fig 2.6

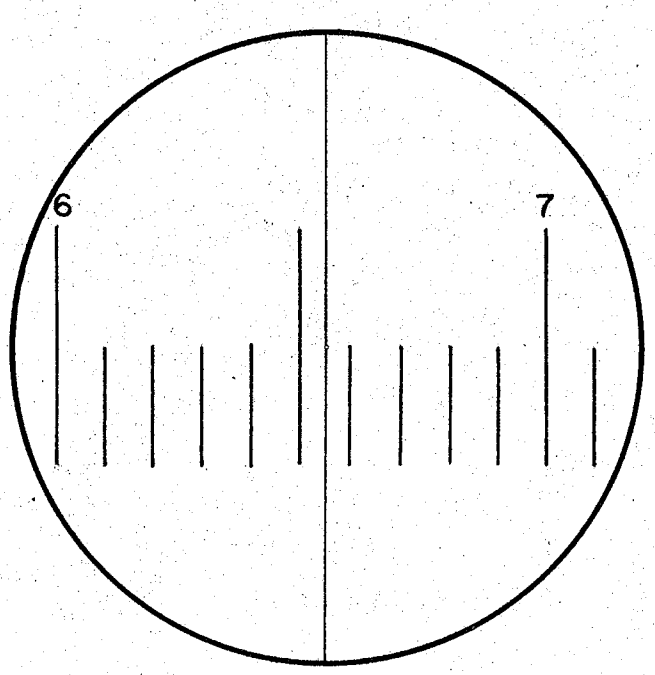
6
7

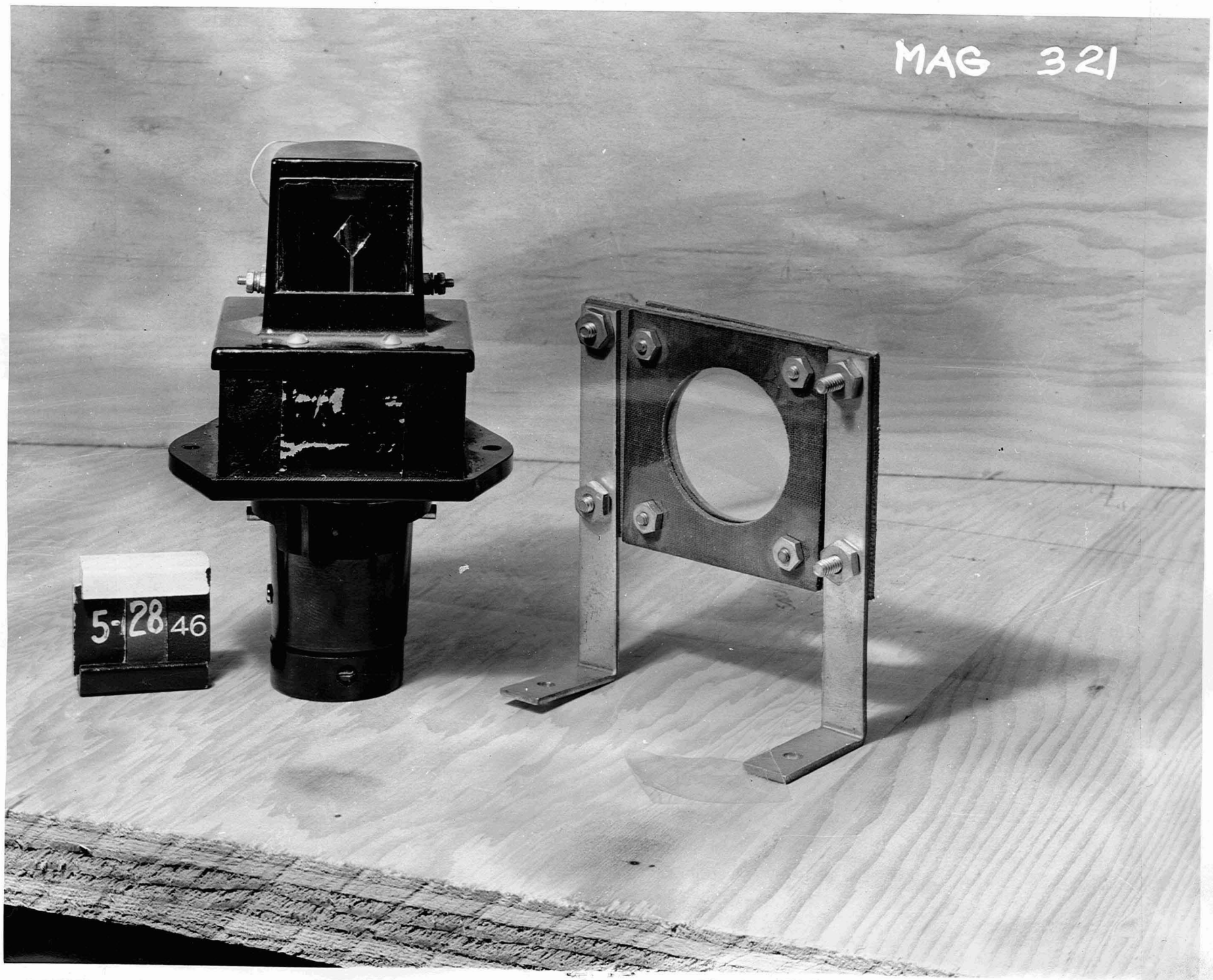

Fig. 10

MAG 322

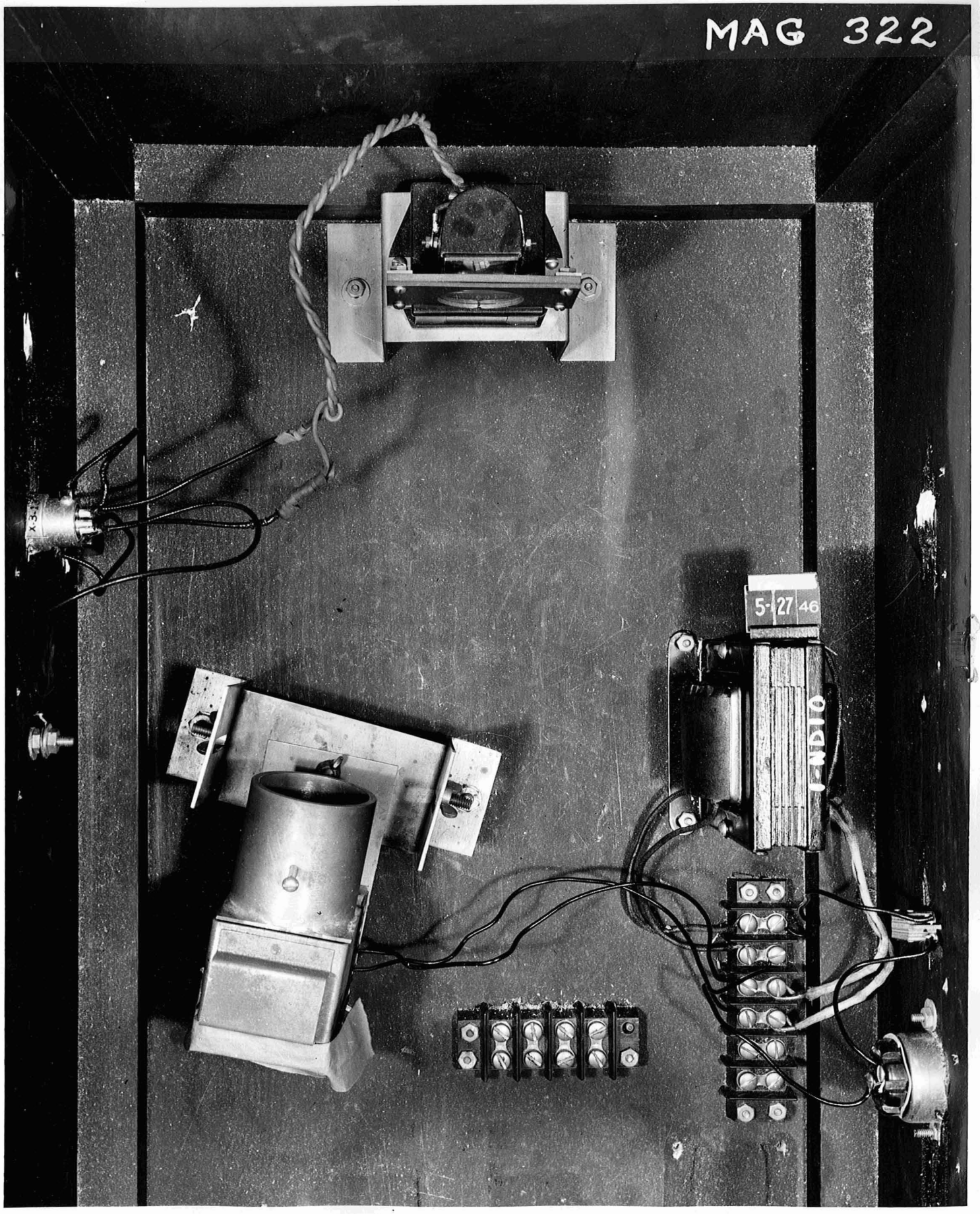

#411

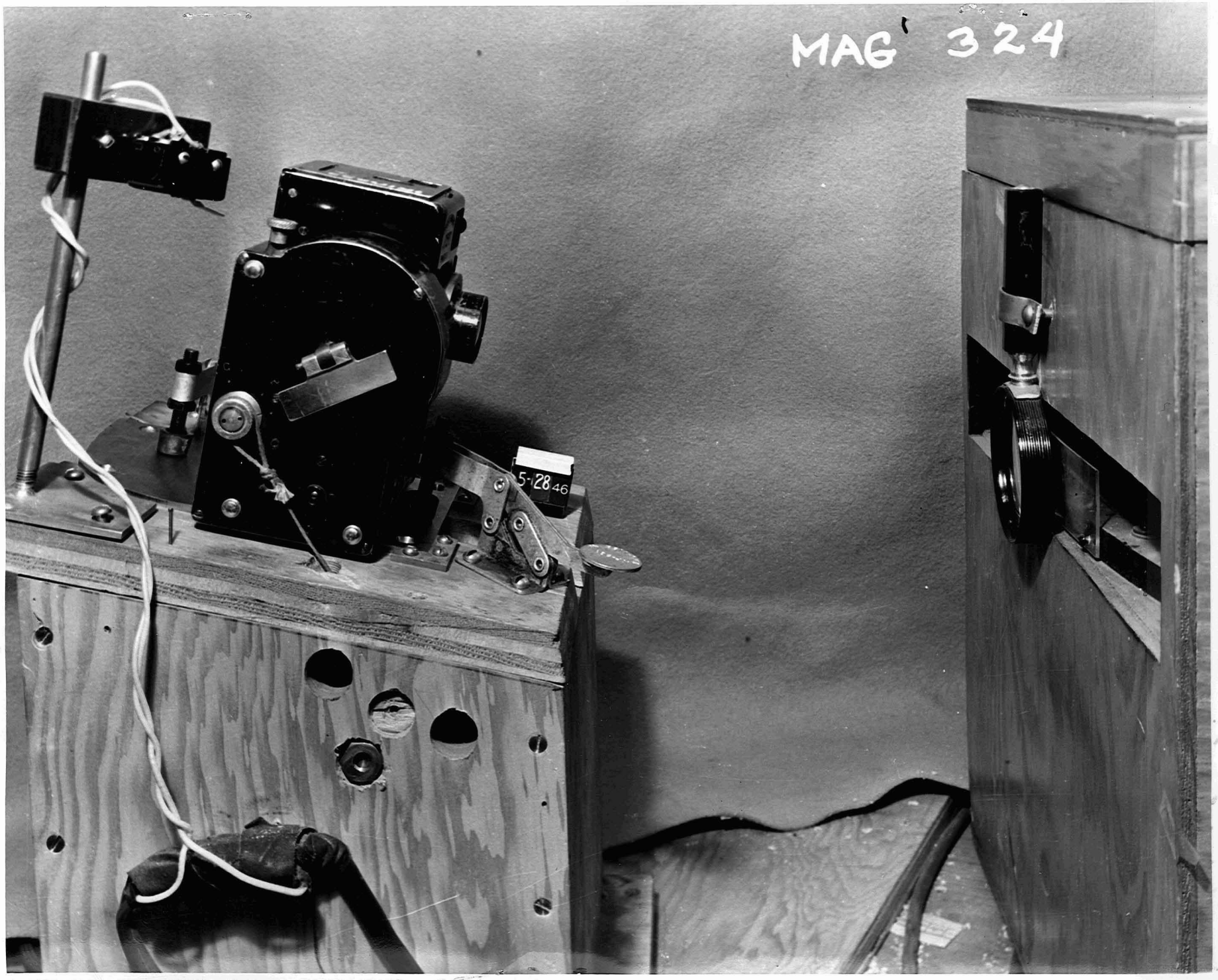
MAG 324
5-28-46

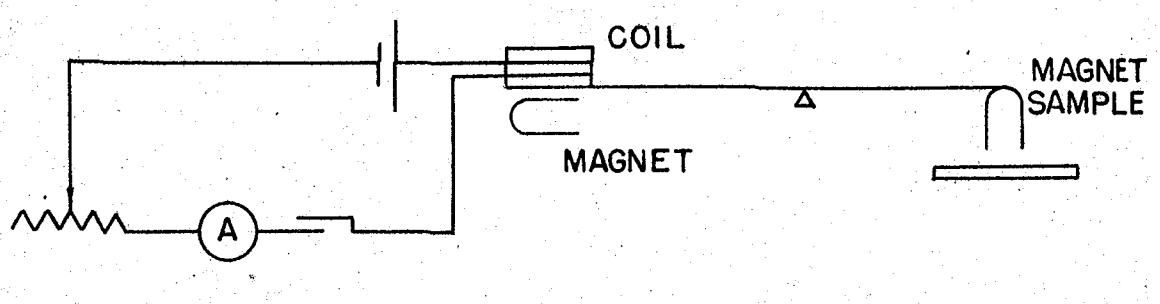

FIG 2.13

CASE I

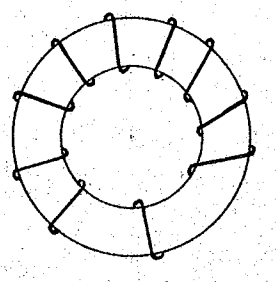

NO. 1

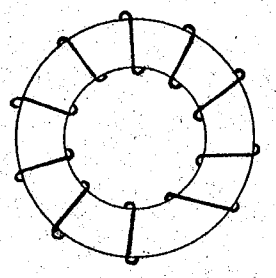

NO. 2

CASE II

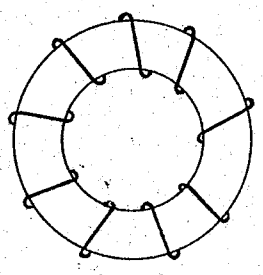

NO. 1

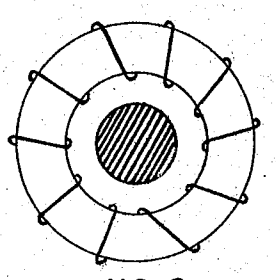

NO. 2

FIG 2.14

2.13
2.14

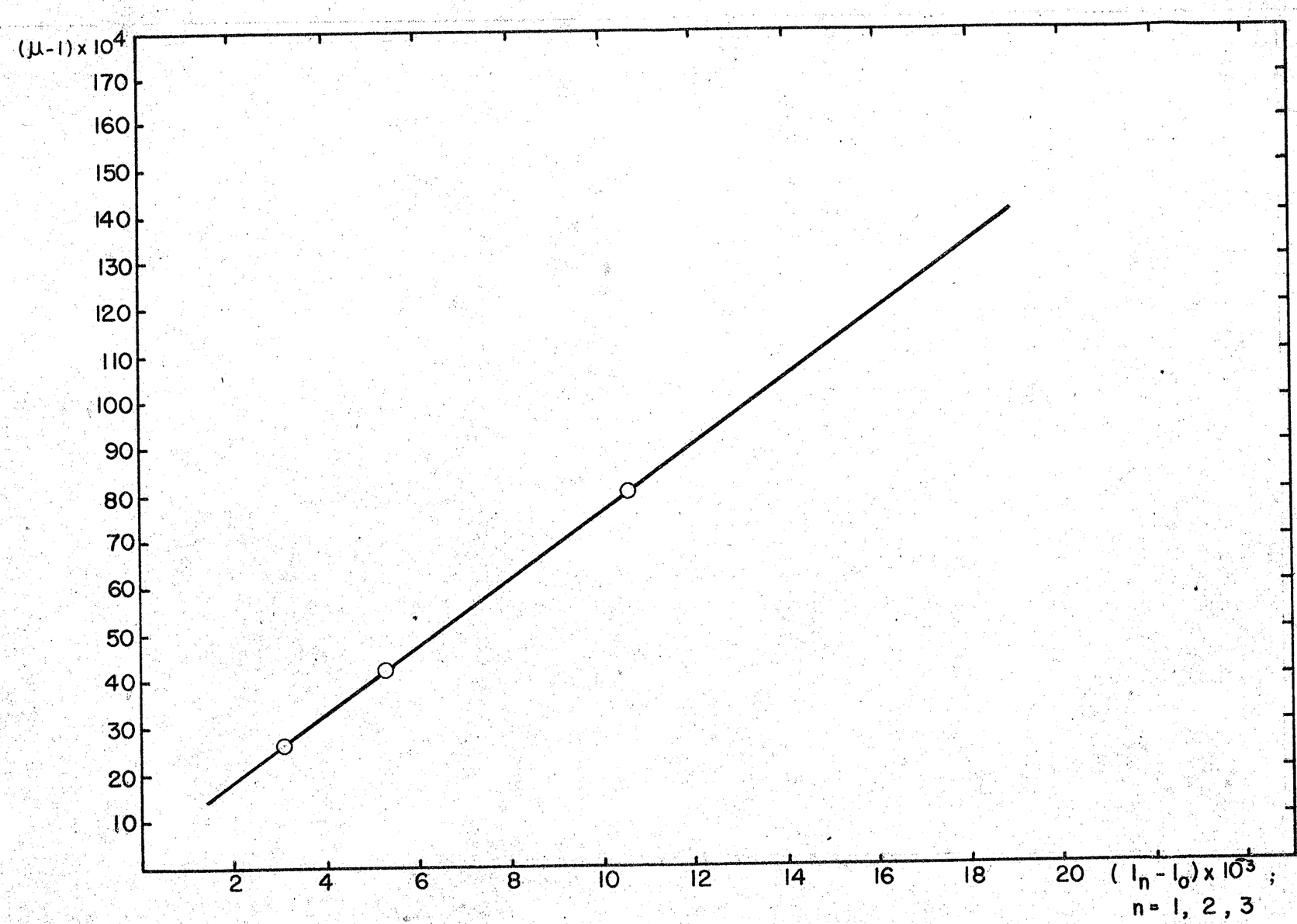
(μ-1) x 10^4
170
160
150
140
130
120
110
100
90
80
70
60
50
40
30
20
10
2
4
6
8
10
12
14
16
18
20
(l_n - l_o) x 10^3 ;
n = 1, 2, 3

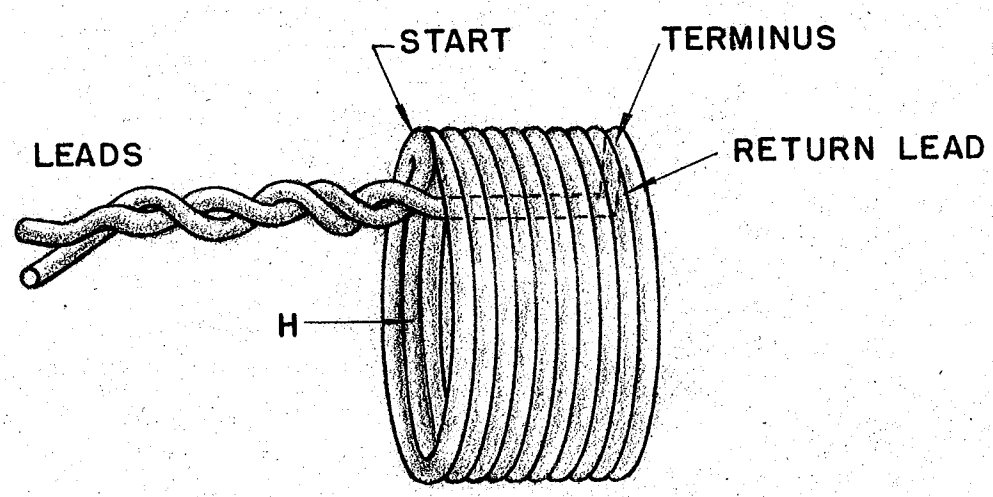
START
TERMINUS
LEADS
RETURN LEAD
H

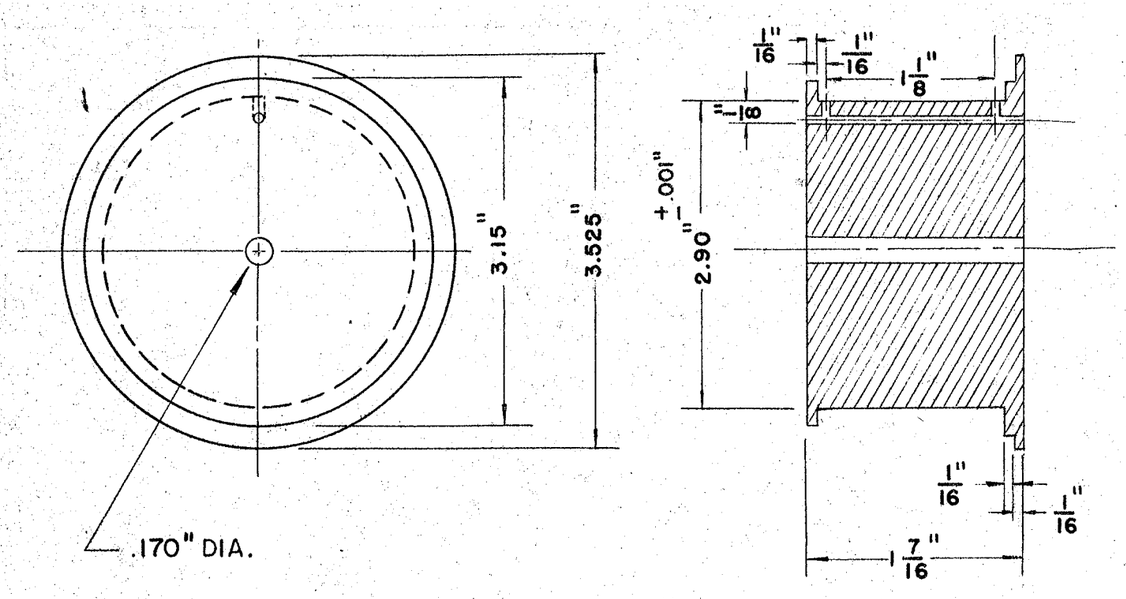

a. SPOOL

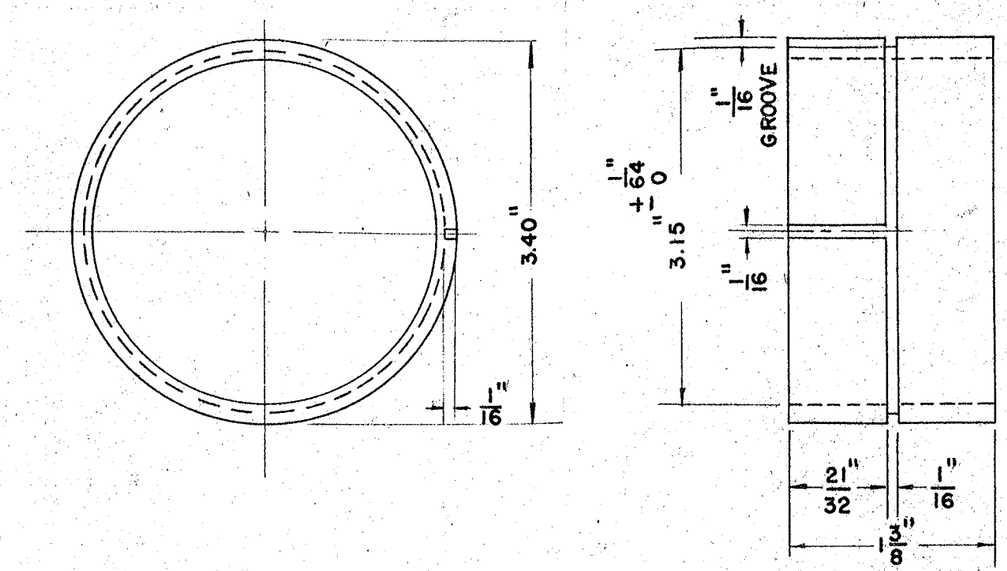

b. WINDING PROTECTOR

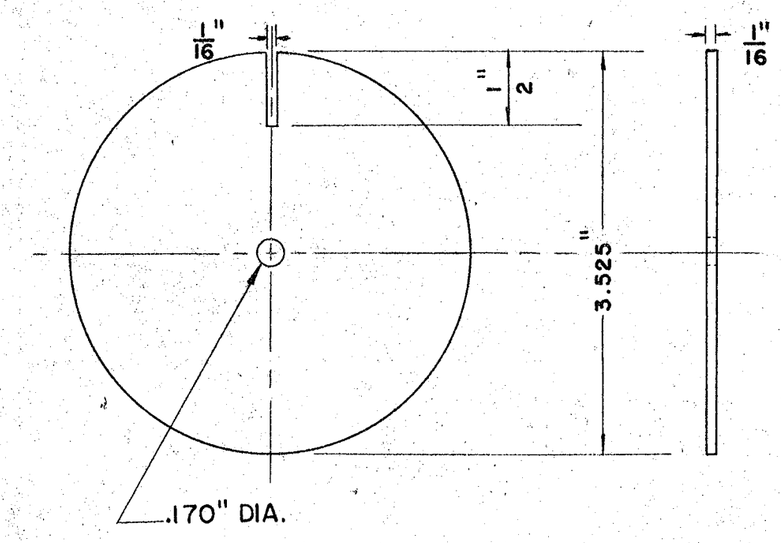

MATERIAL: BAKELITE

c. END DISK PROTECTOR

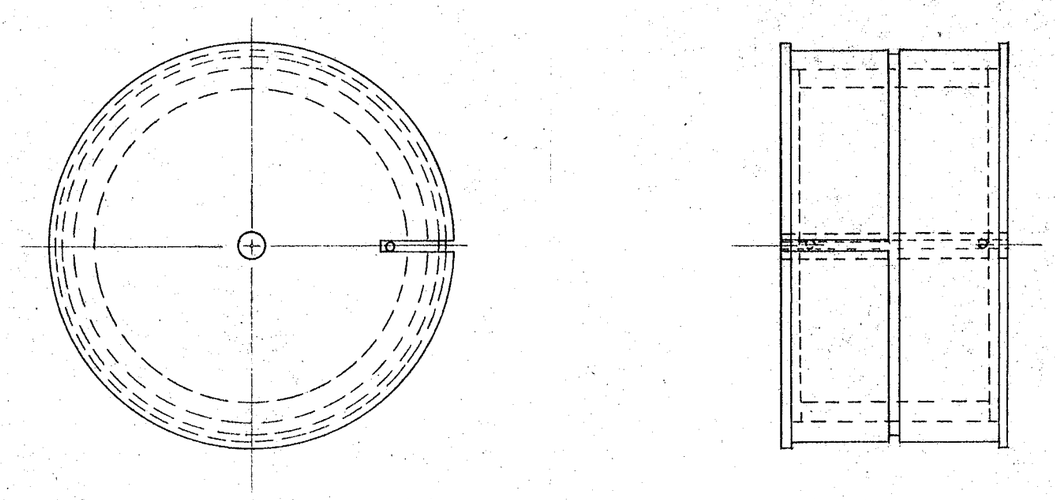

NOTE: DO NOT CEMENT PARTS TOGETHER - USE MACHINE SCREWS

d. ASSEMBLY

Fig 2.18

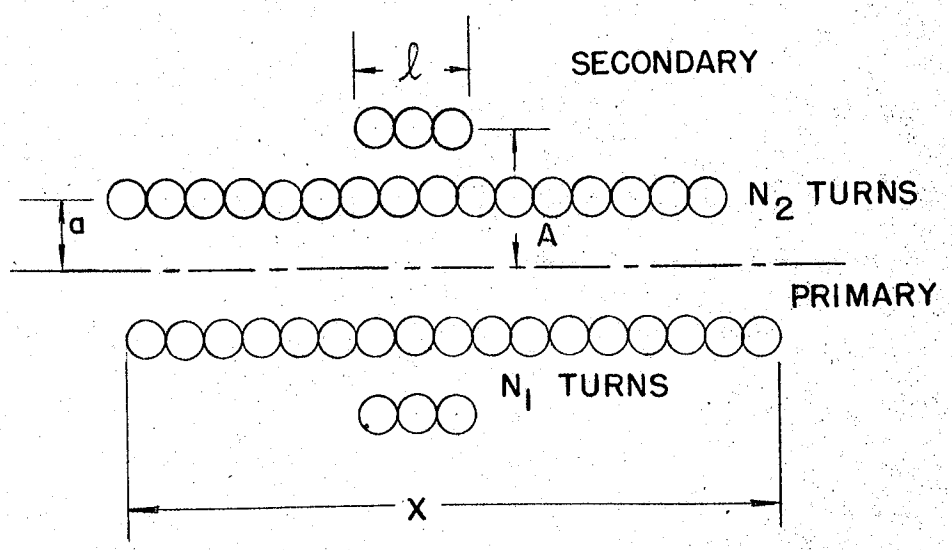
ℓ
SECONDARY
N2 TURNS
a
A
PRIMARY
N1 TURNS
X

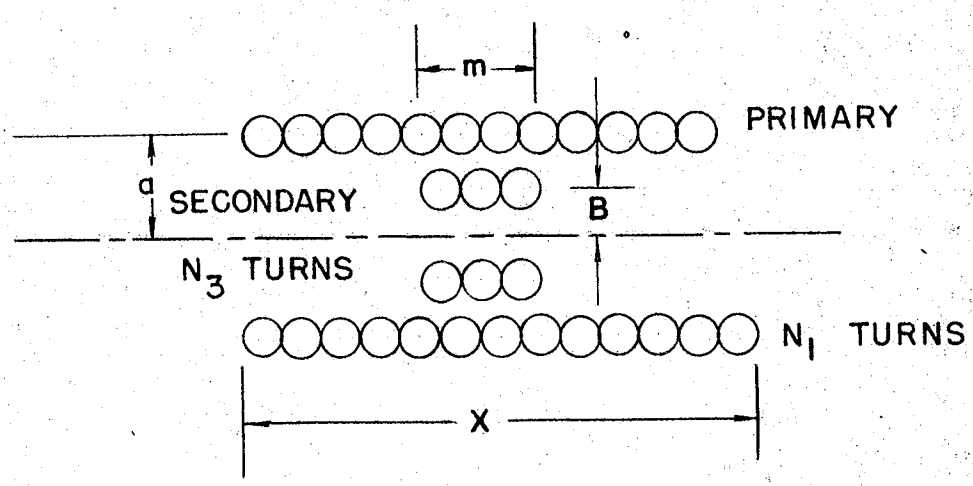
m
PRIMARY
a
SECONDARY
B
N3 TURNS
N1 TURNS
X

74 2, 21

2.22

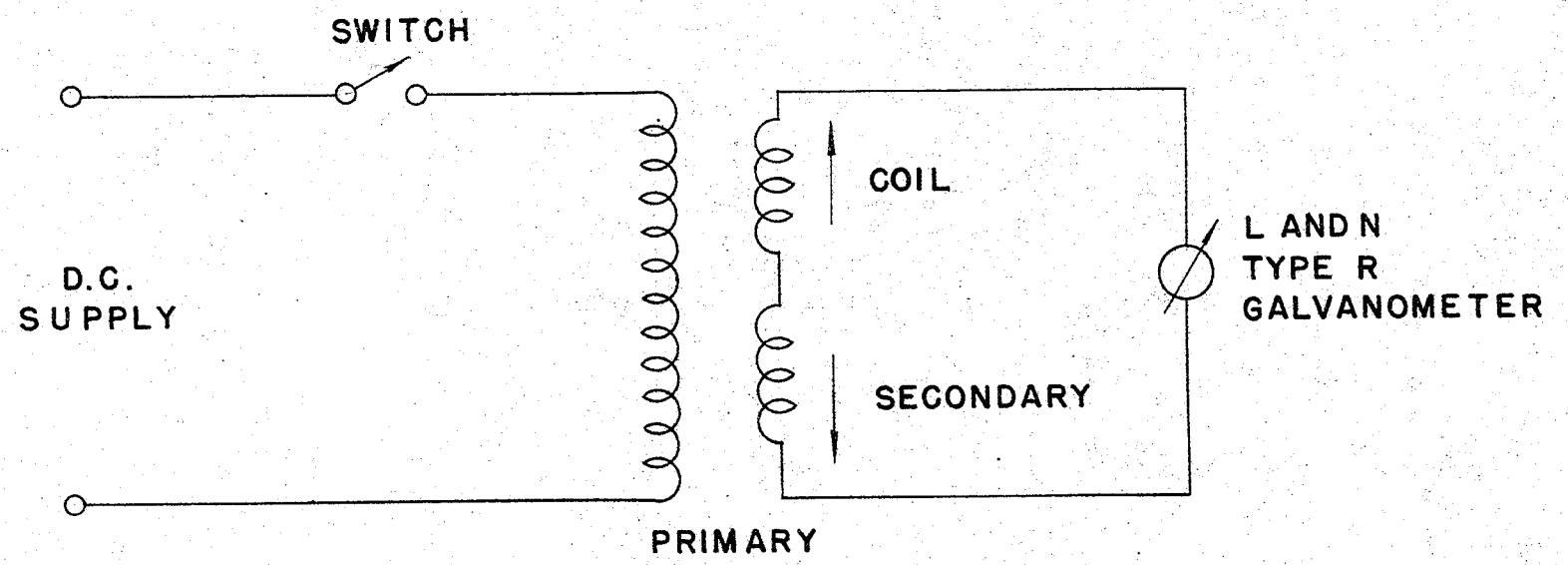
SWITCH
D.C.
SUPPLY
COIL
SECONDARY
PRIMARY
L AND N
TYPE R
GALVANOMETER

Fig 2.24

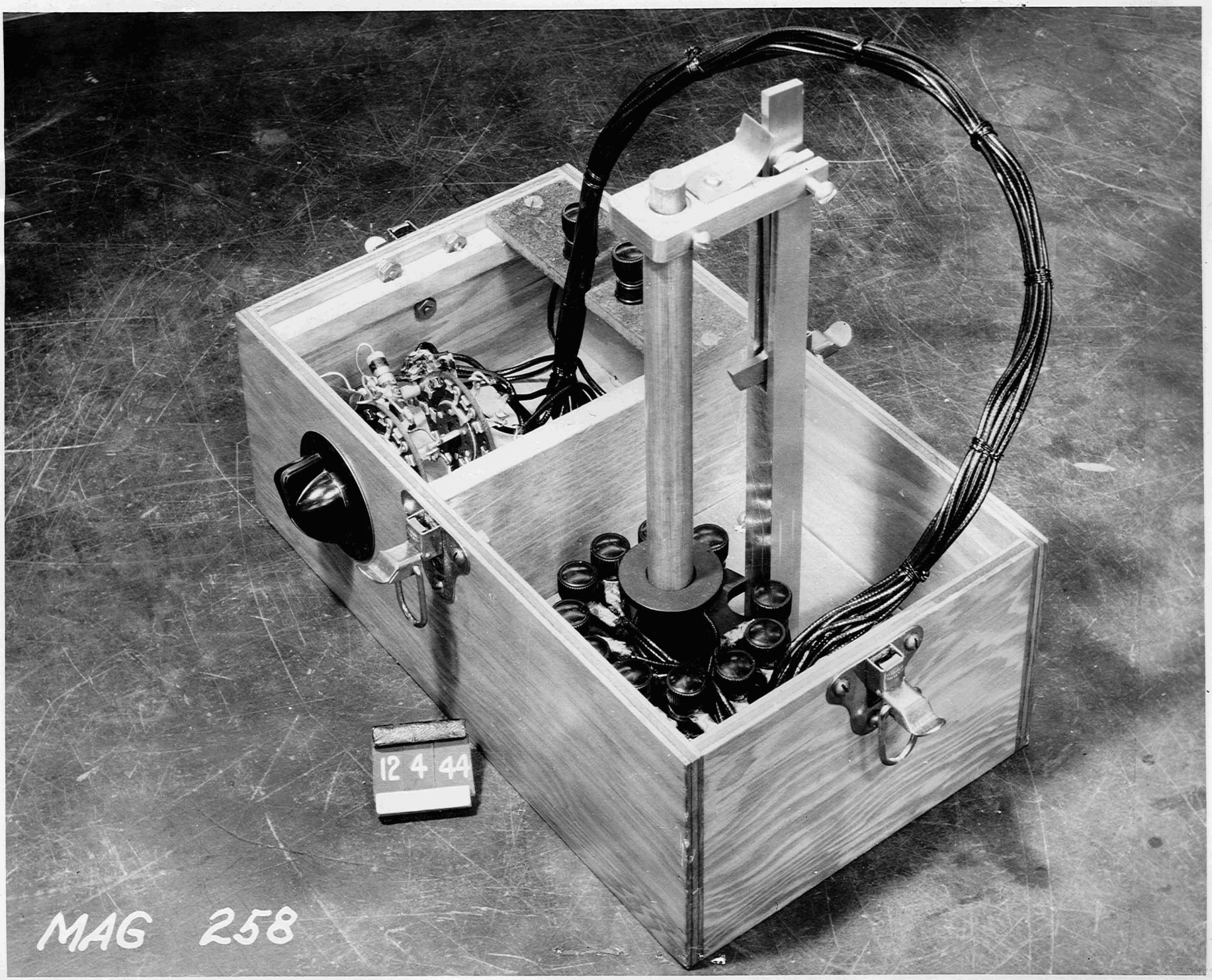

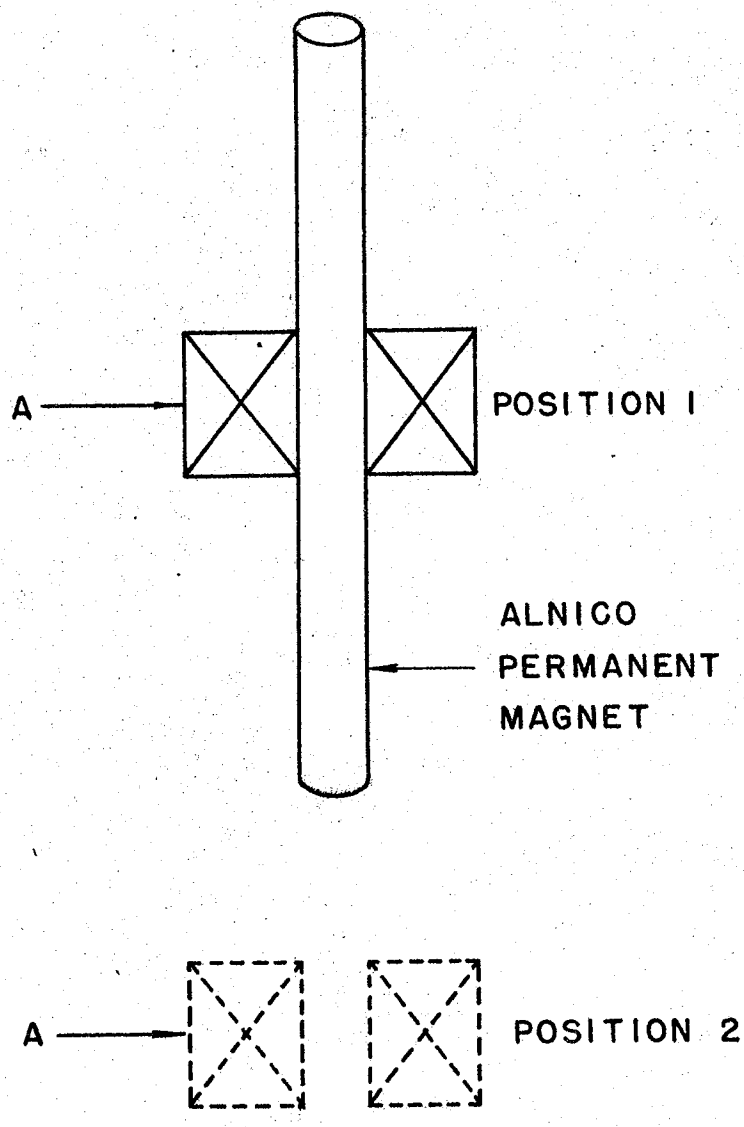
A
POSITION 1
ALNICO
PERMANENT
MAGNET
A
POSITION 2

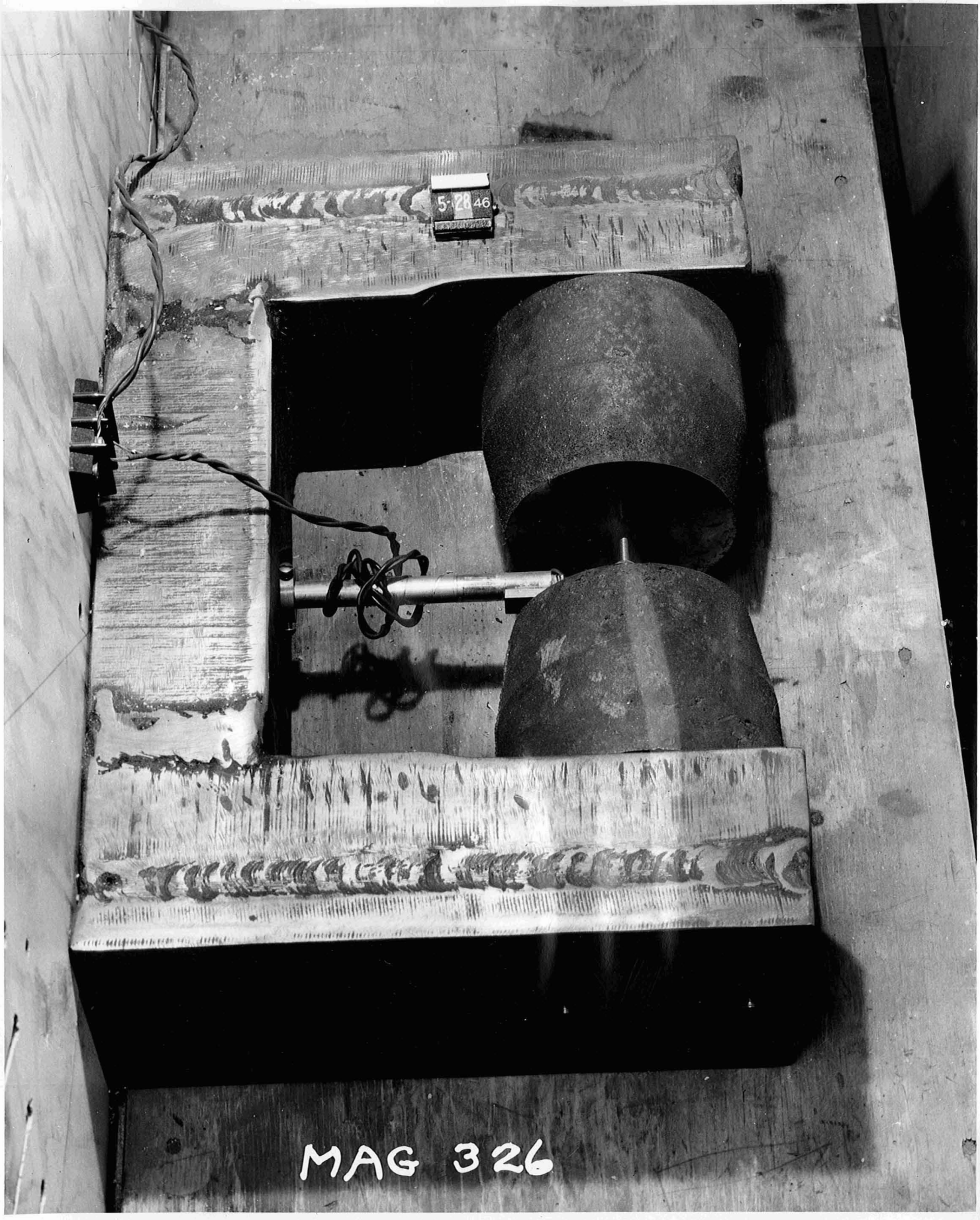

Fig 2.26a

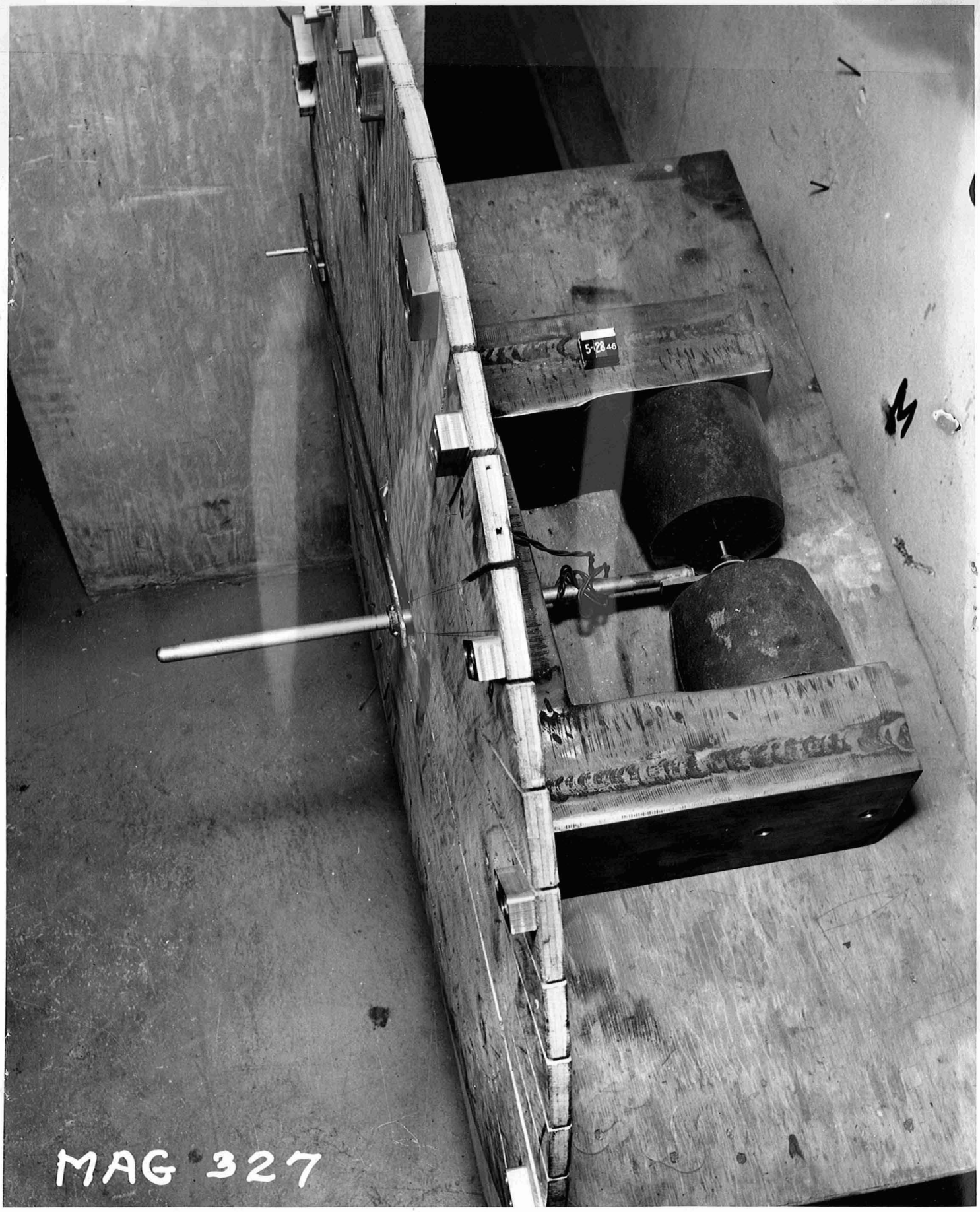

Fig 2.26(b)

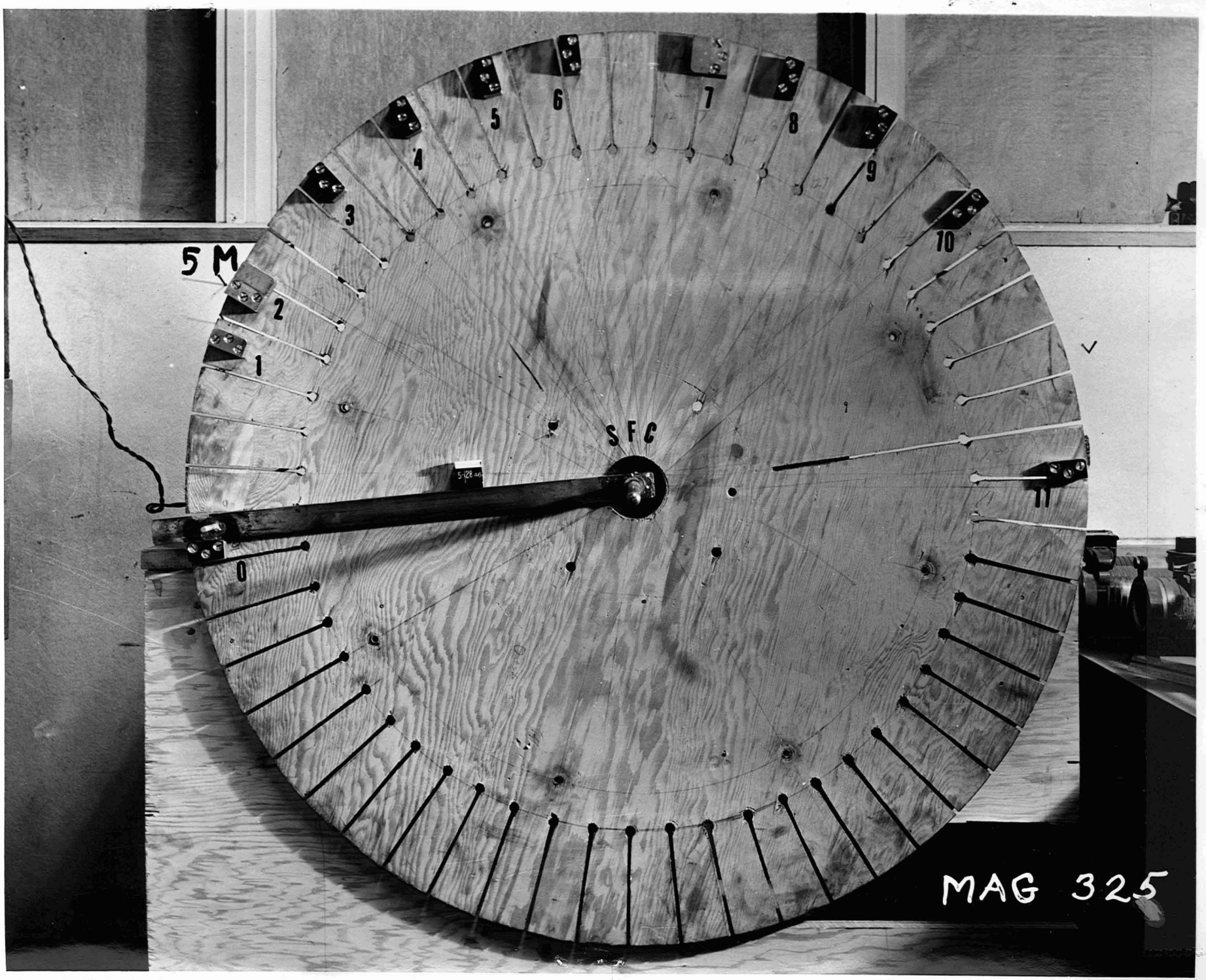

Fig 226 (c)

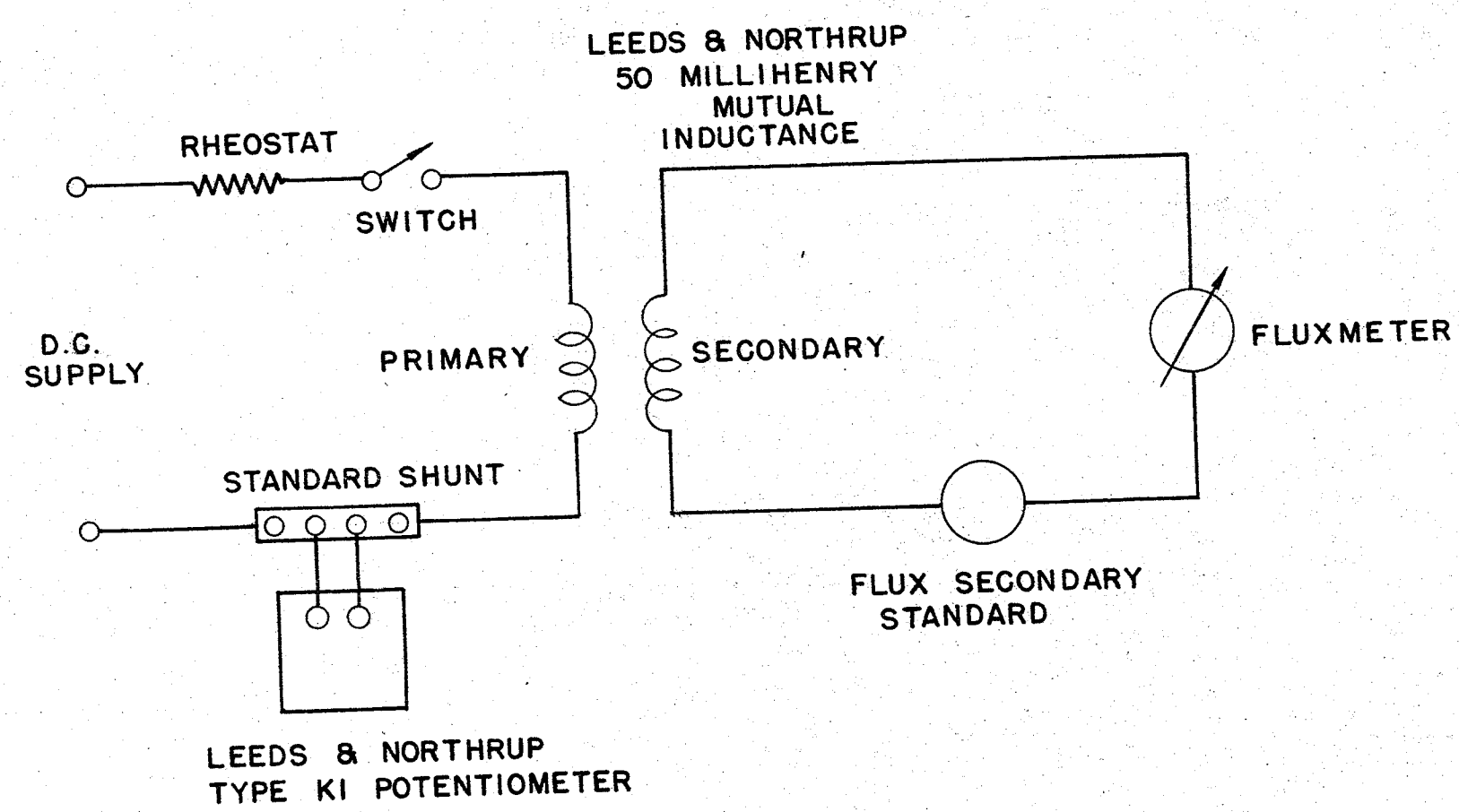
LEEDS & NORTHRUP
50 MILLIHENRY
MUTUAL
INDUCTANCE
RHEOSTAT
SWITCH
D.C.
SUPPLY
PRIMARY
SECONDARY
FLUXMETER
STANDARD SHUNT
FLUX SECONDARY
STANDARD
LEEDS & NORTHRUP
TYPE KI POTENTIOMETER

2.27

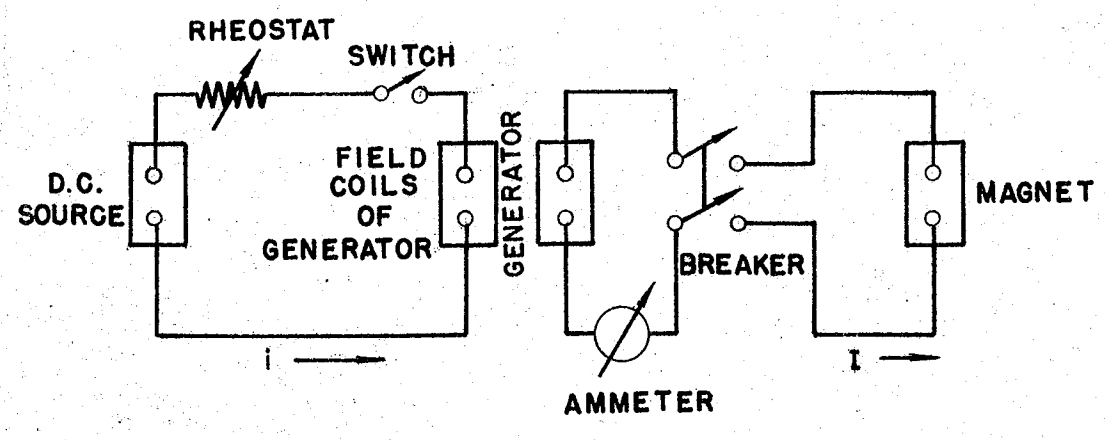

Fig 2.28

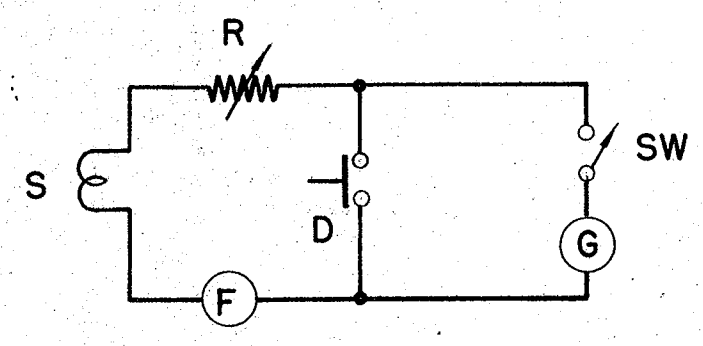

Fig 2.29

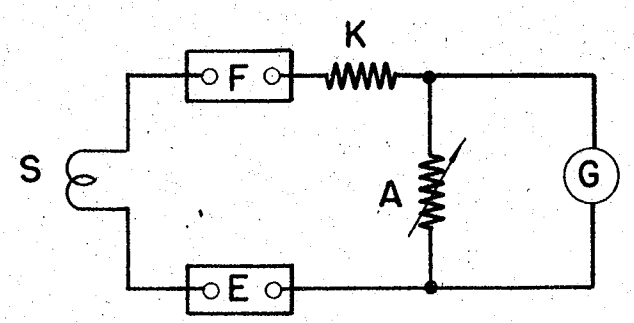

Fig 2.30

2.28
2.29
2.30

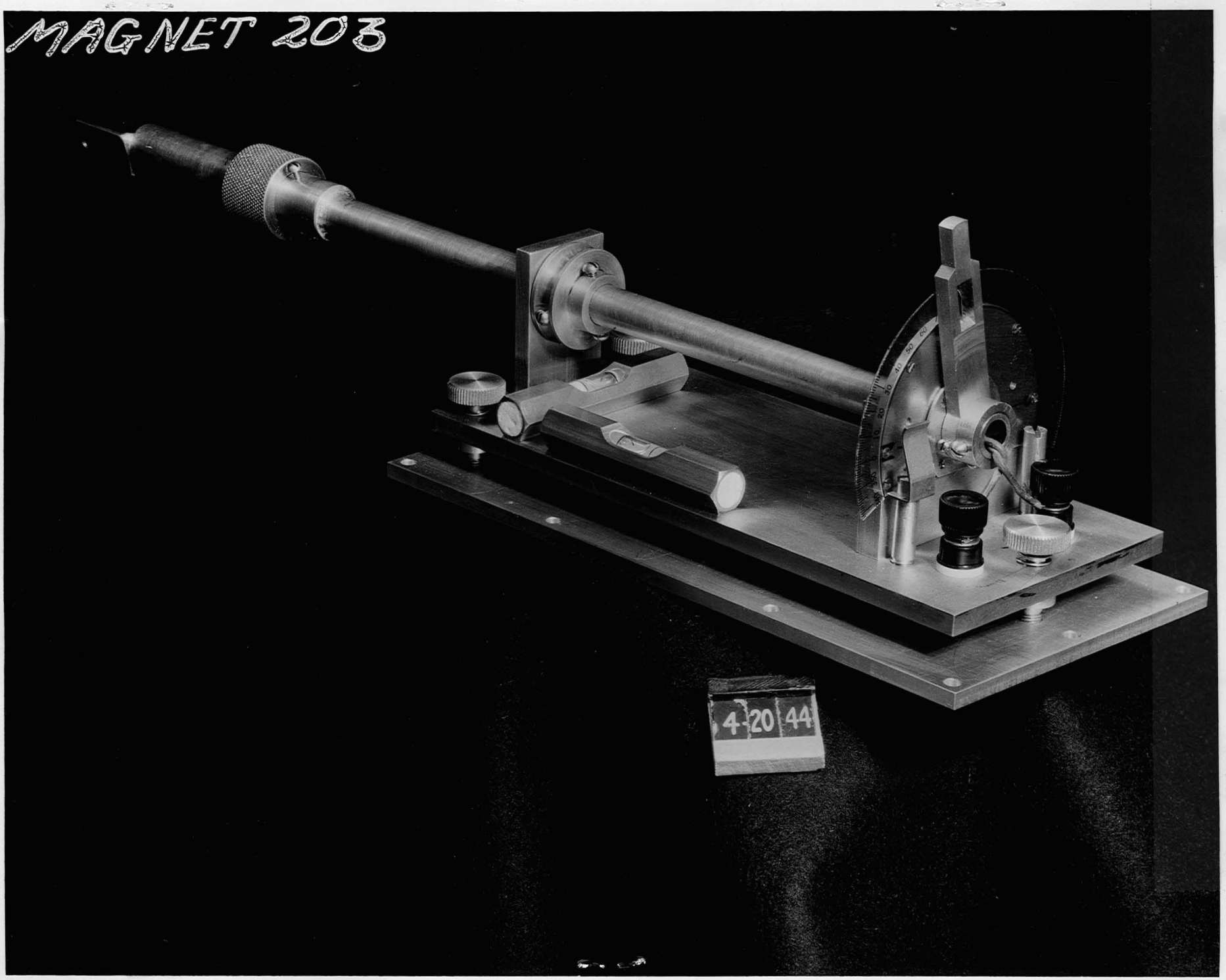

2.31

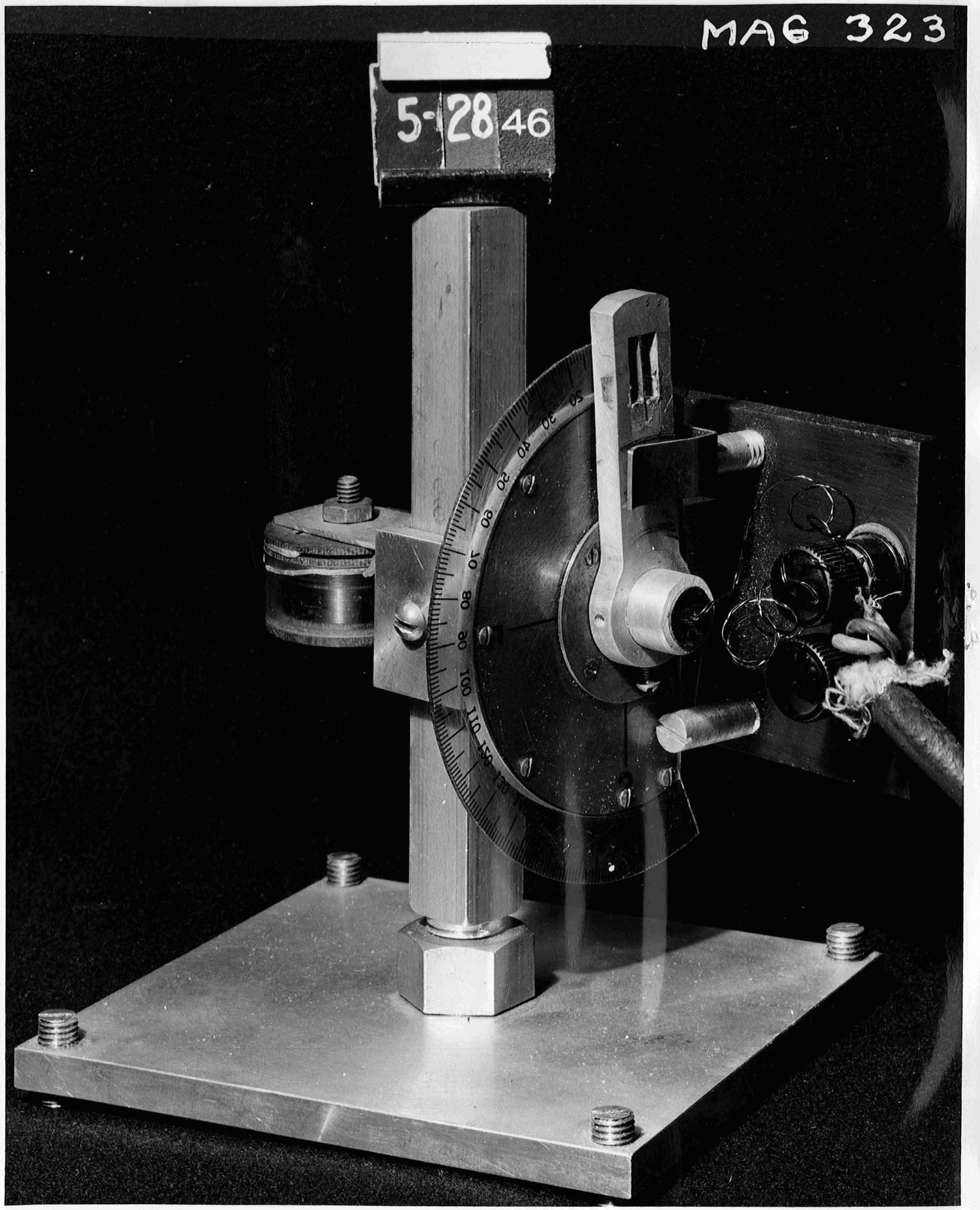

2.32

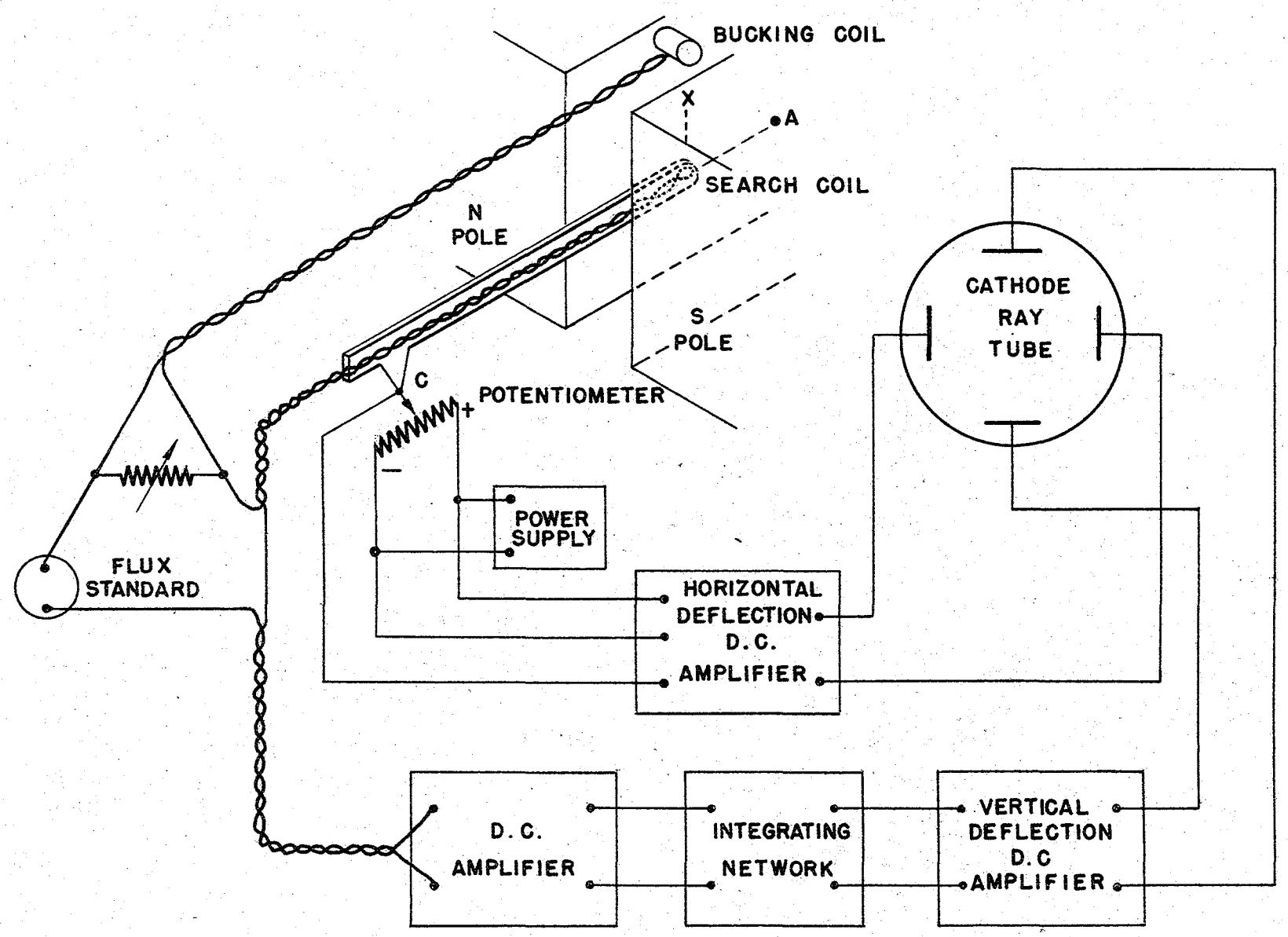
BUCKING COIL
X
A
SEARCH COIL
N
POLE
S
POLE
C
POTENTIOMETER
+
−
POWER
SUPPLY
FLUX
STANDARD
CATHODE
RAY
TUBE
HORIZONTAL
DEFLECTION
D.C.
AMPLIFIER
D.C.
AMPLIFIER
INTEGRATING
NETWORK
VERTICAL
DEFLECTION
D.C
AMPLIFIER

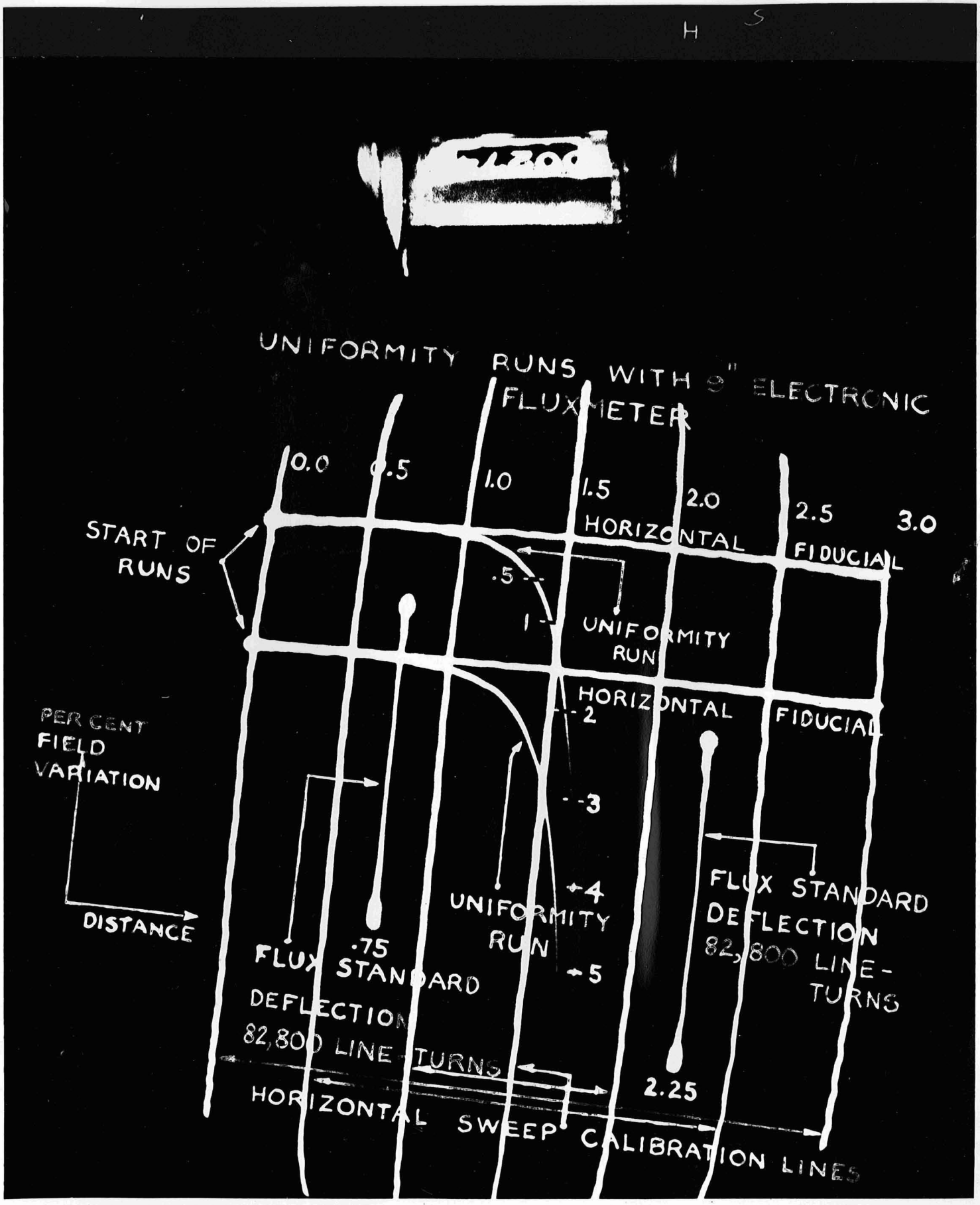

Fig 2.34 Mag 349

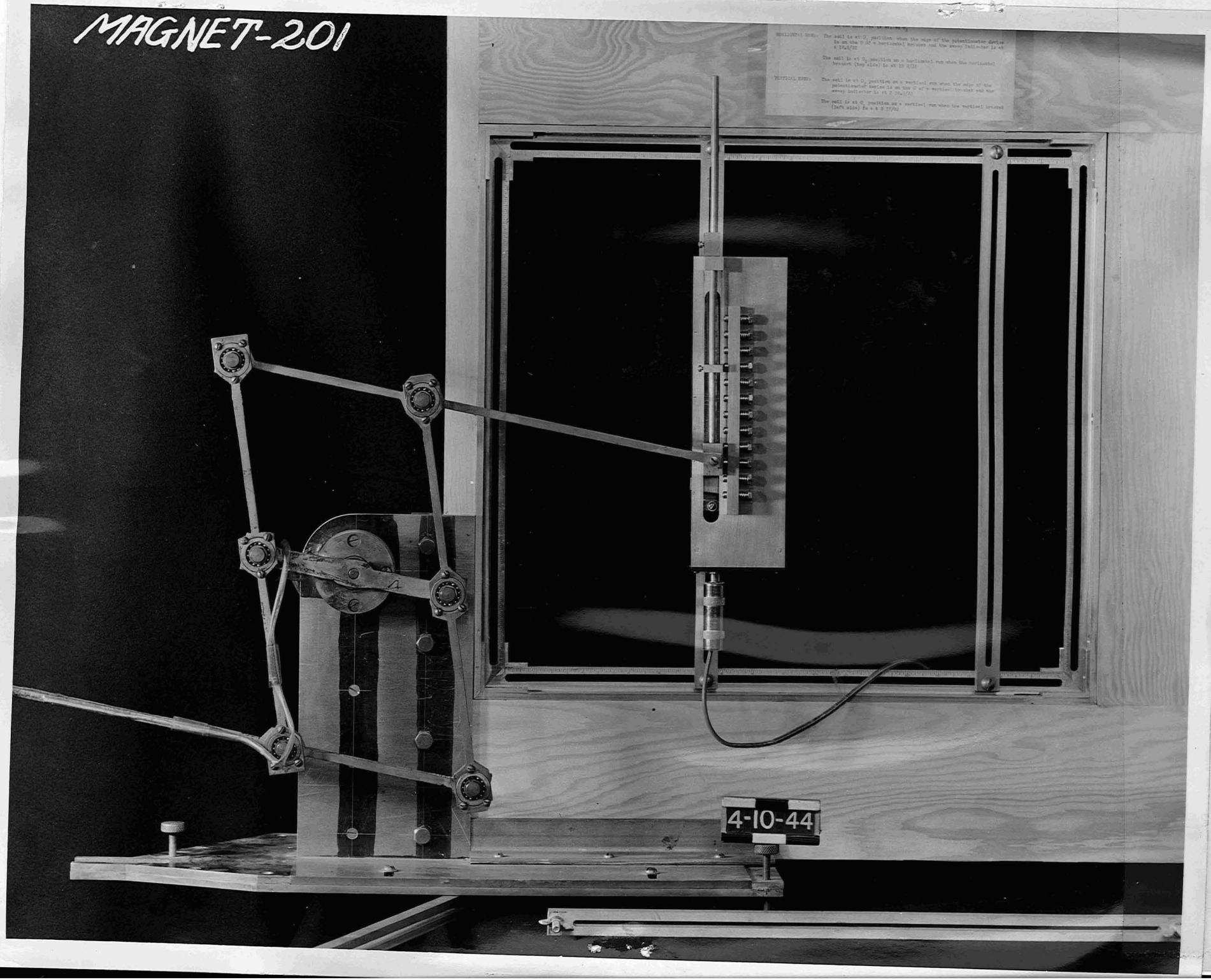

74 2.132

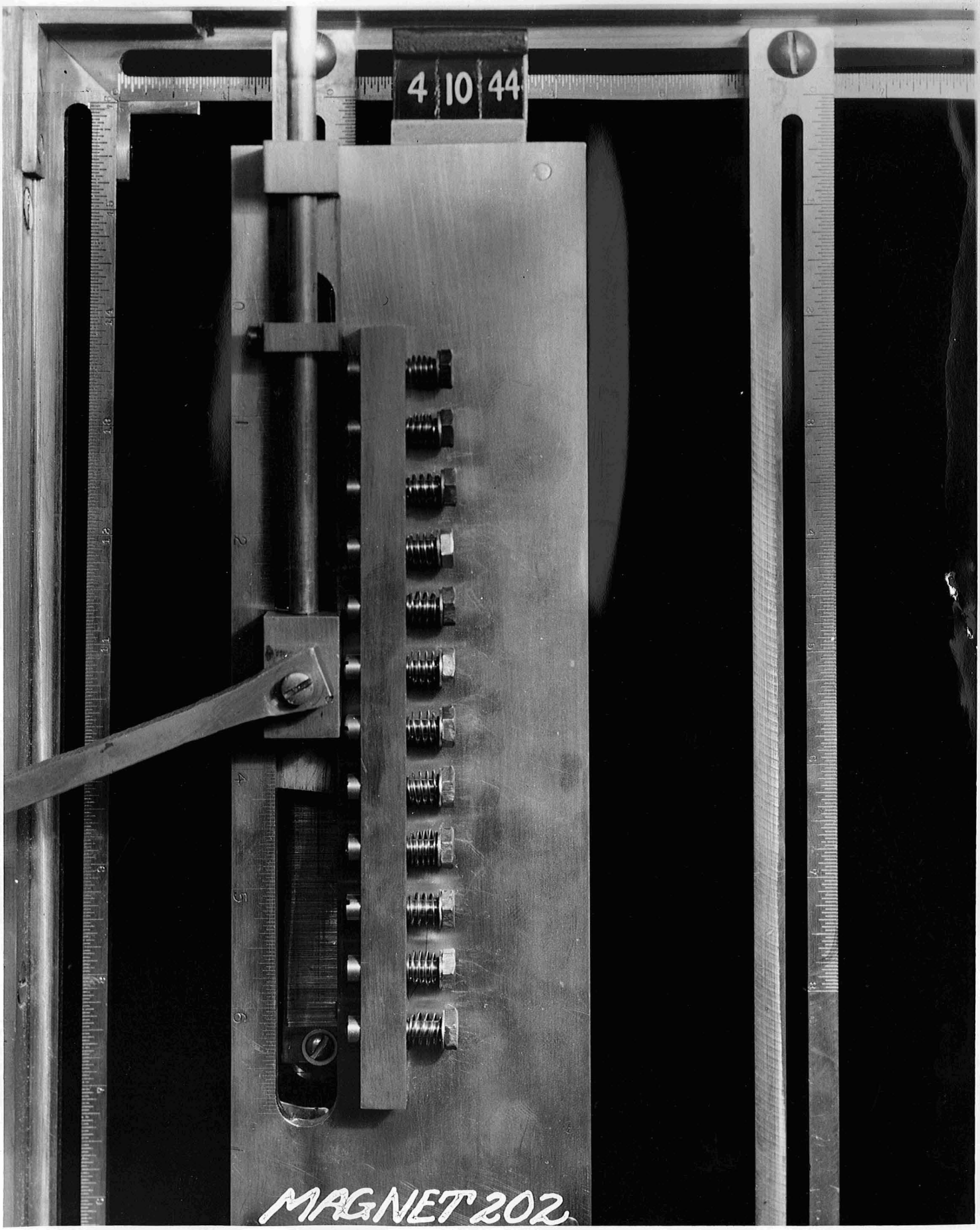

Fig 2.36

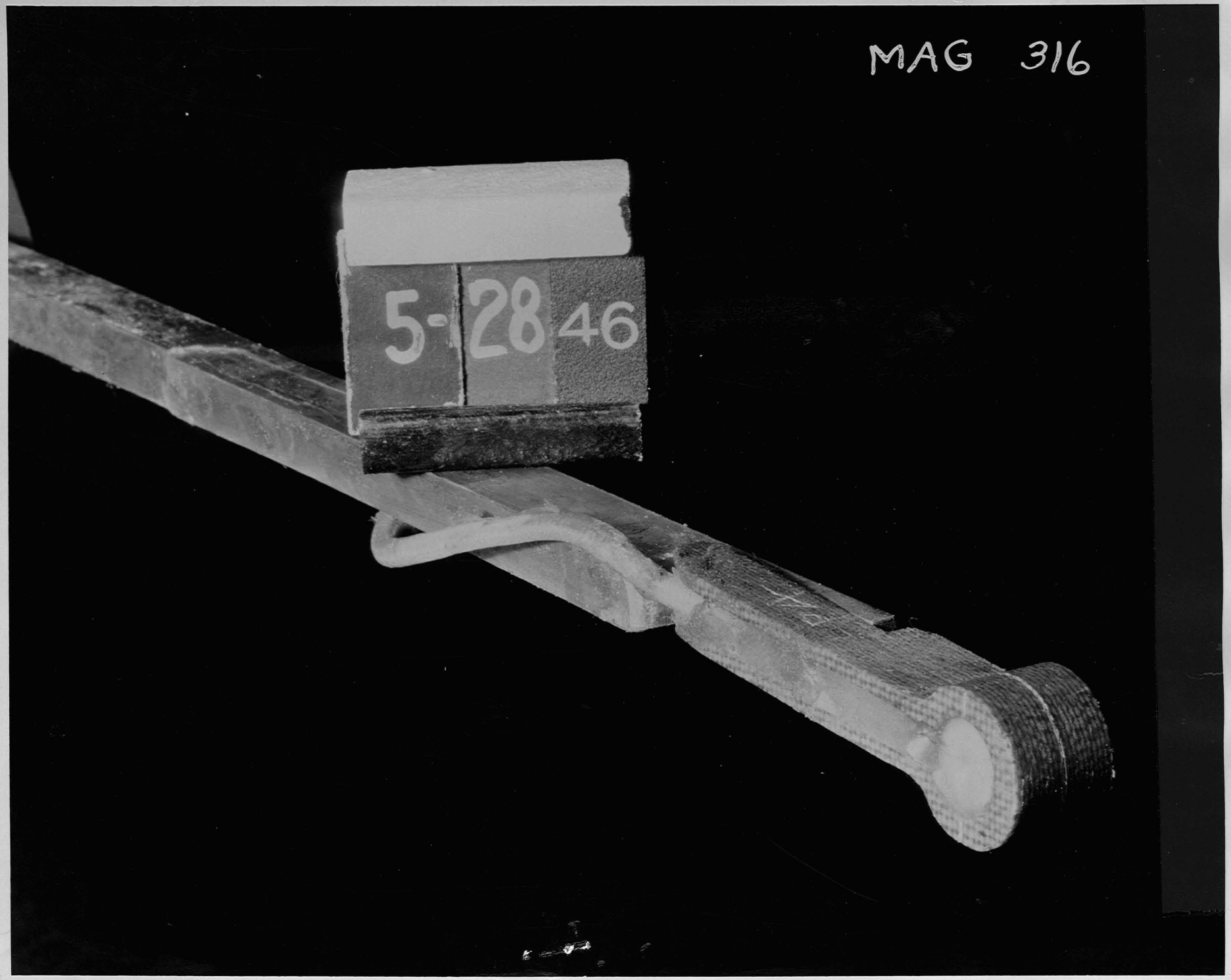

2.37

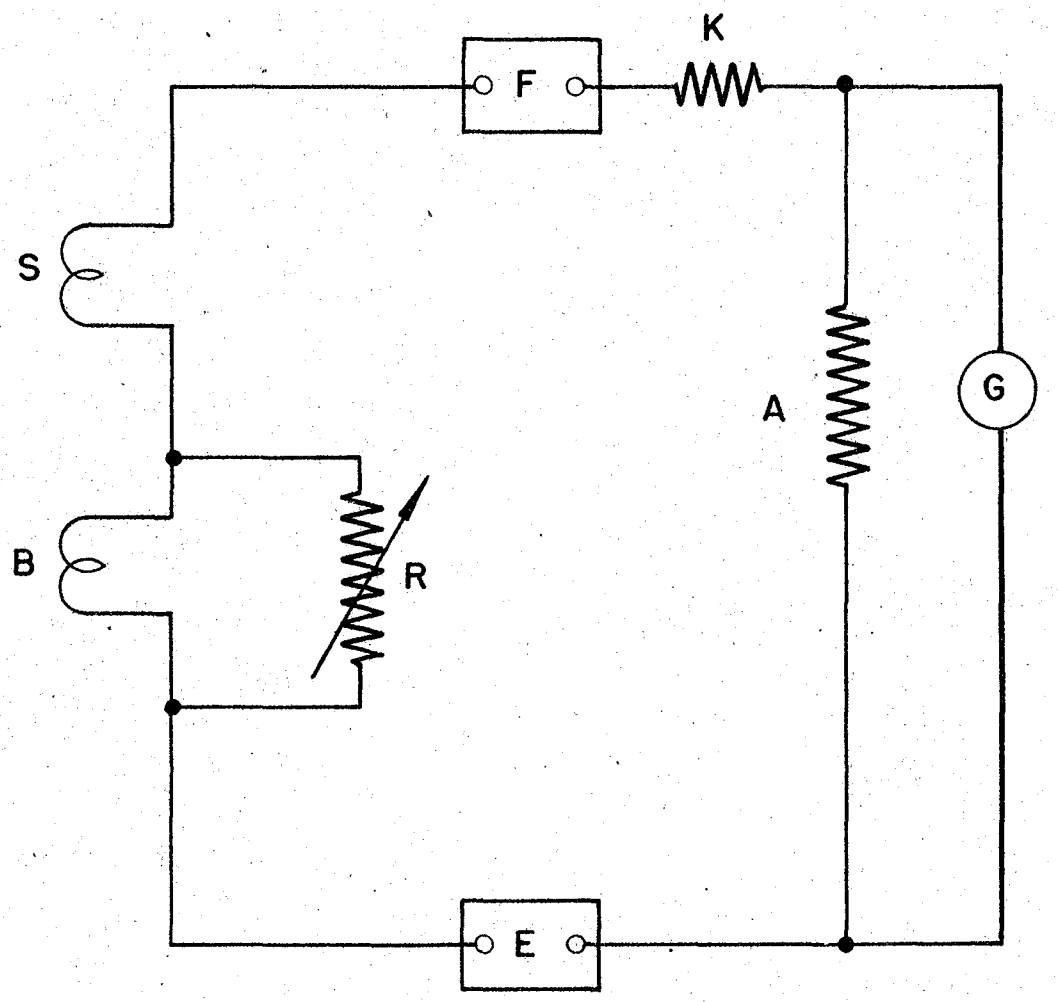
K
F
S
A
G
B
R
E

MAG 312

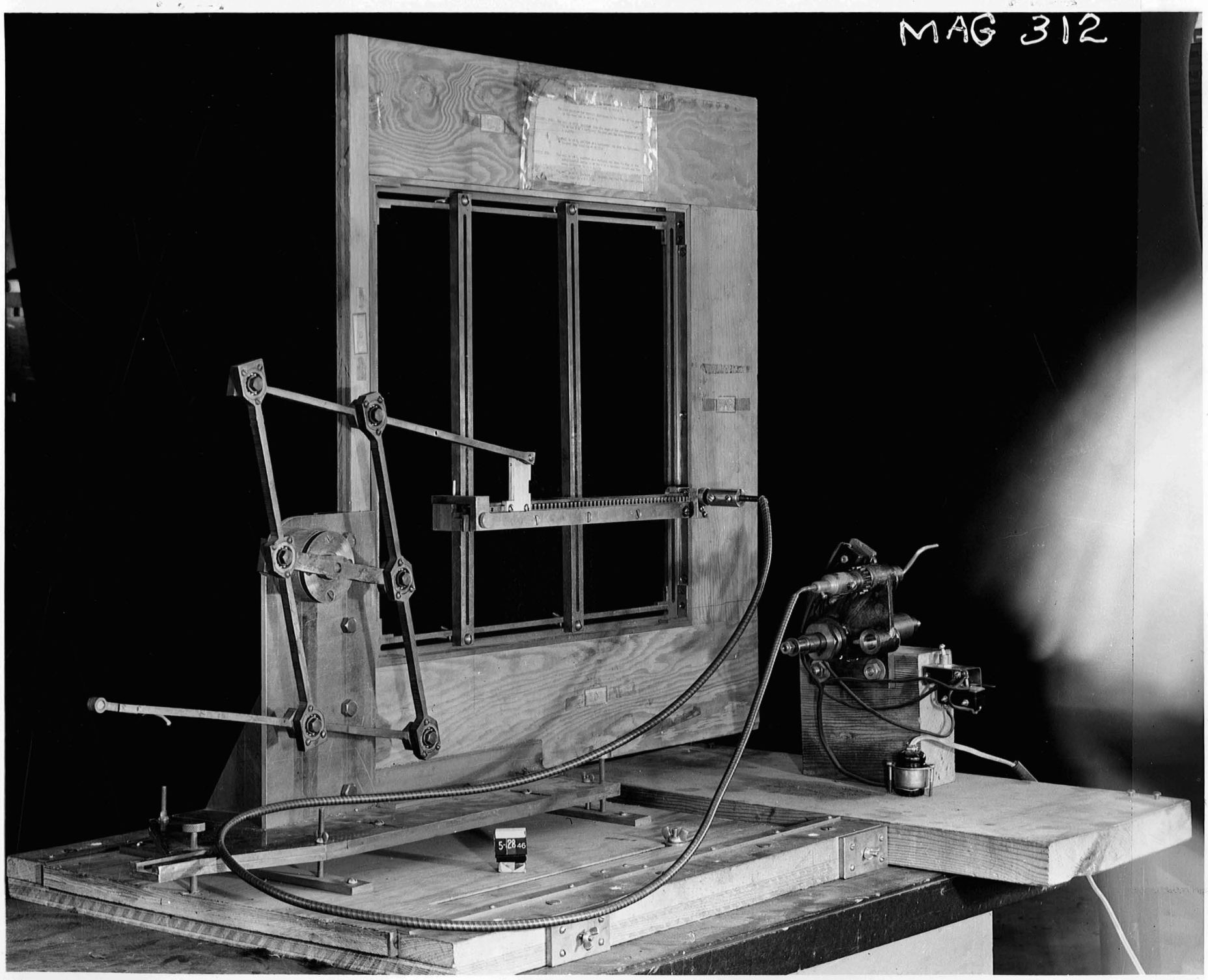

3.39

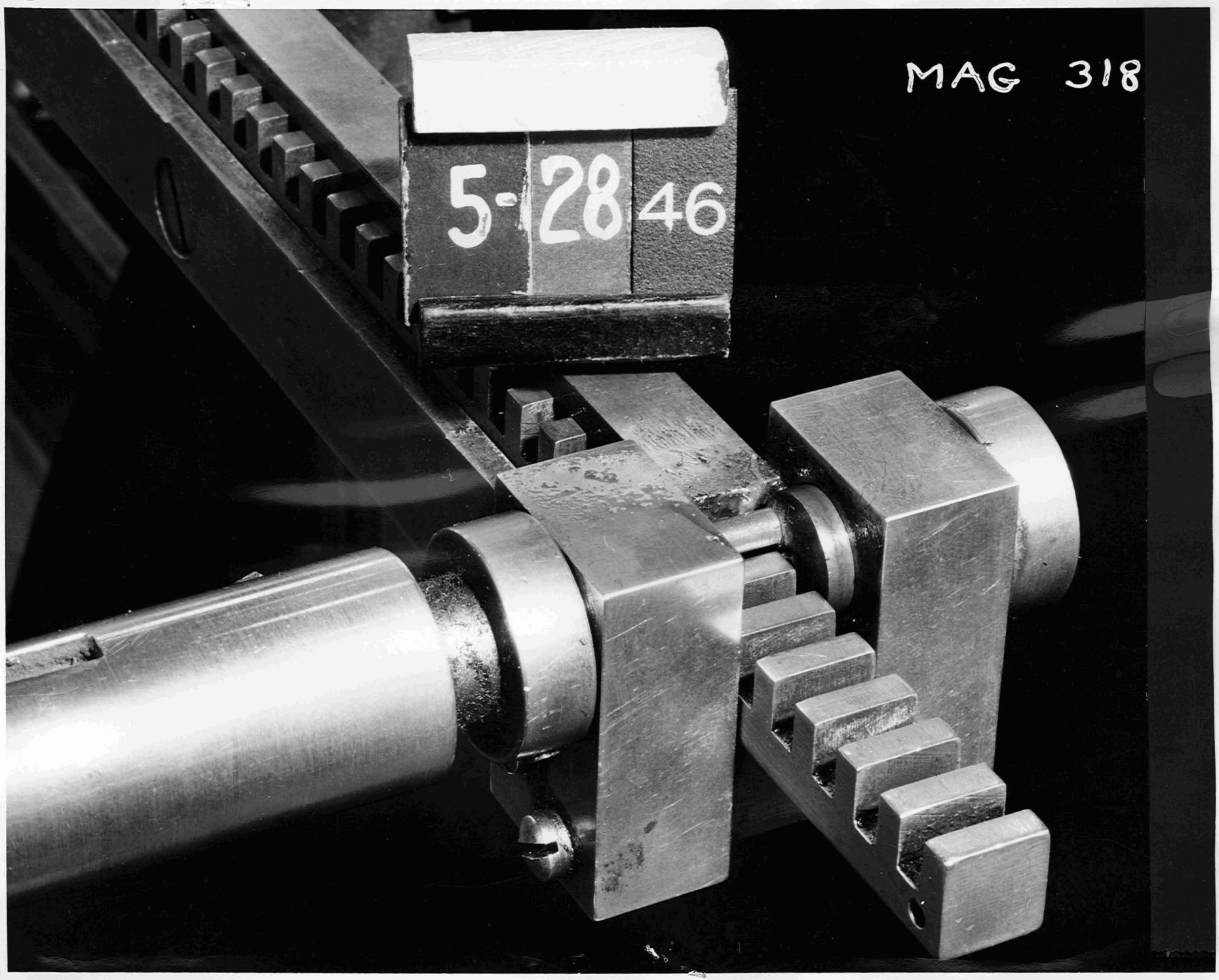
MAG 318
5-28 46

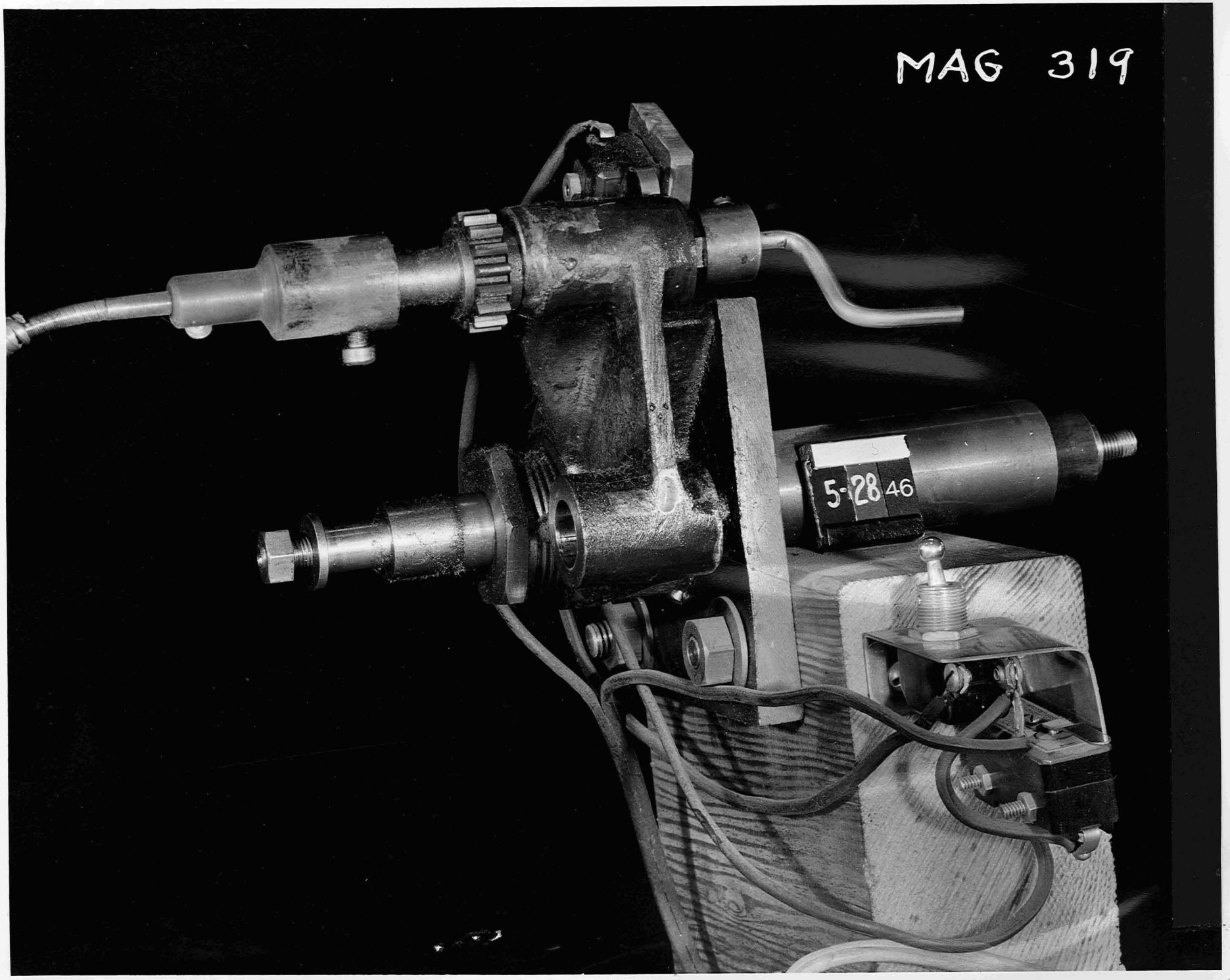
MAG 319
5-28-46

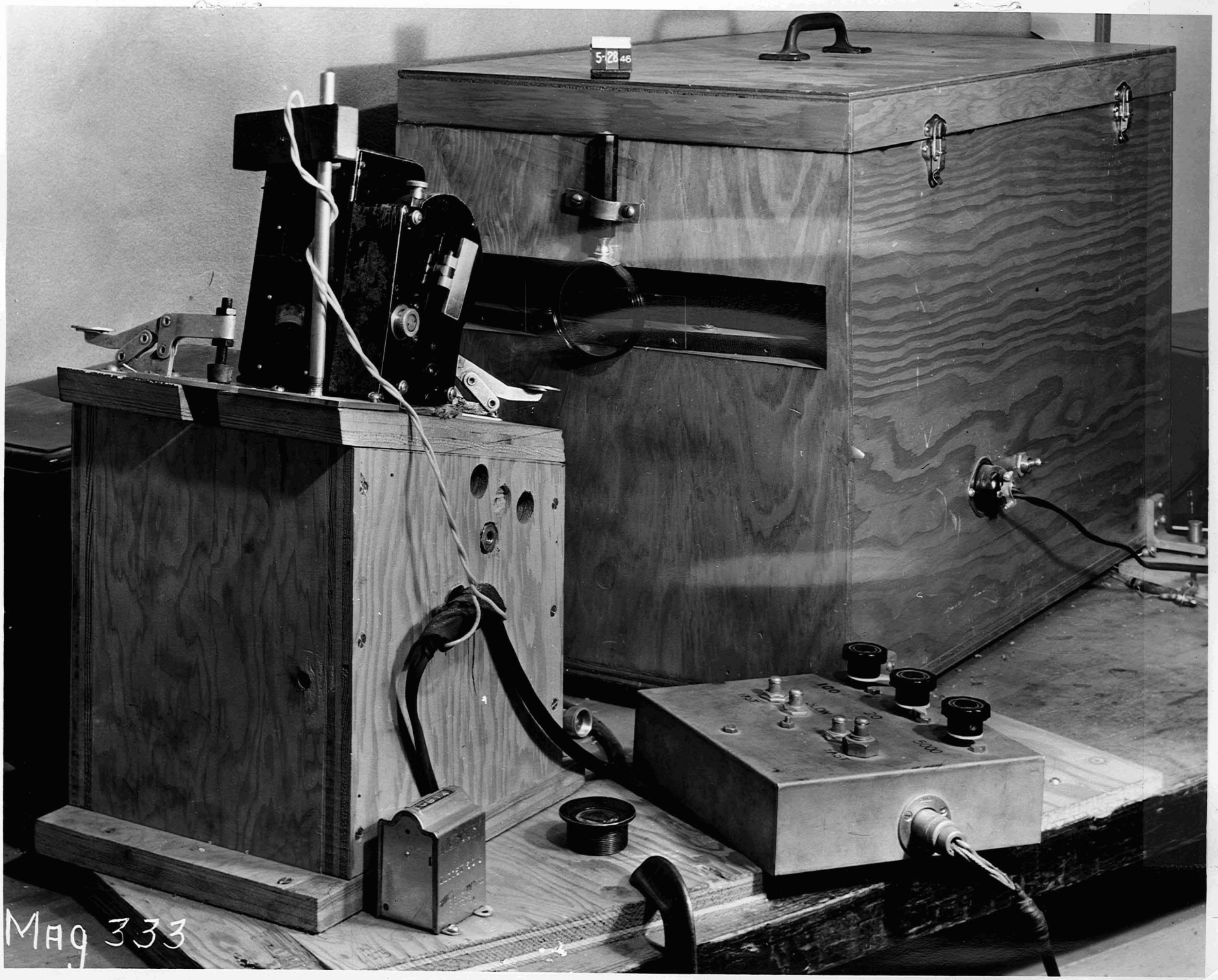

Mag 333

2.42

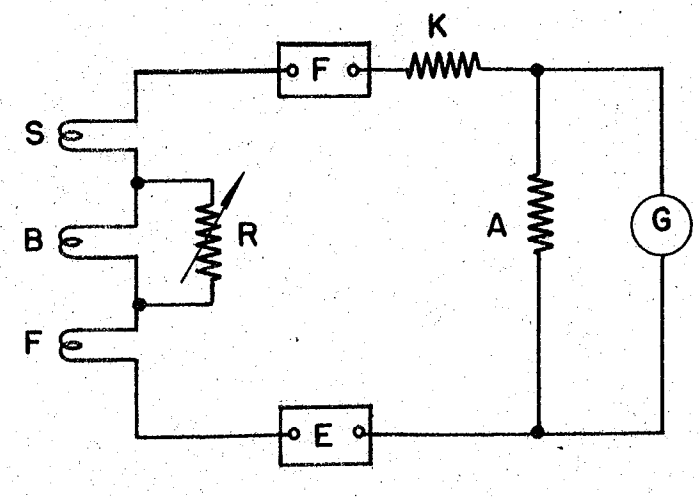

Fig 2.43

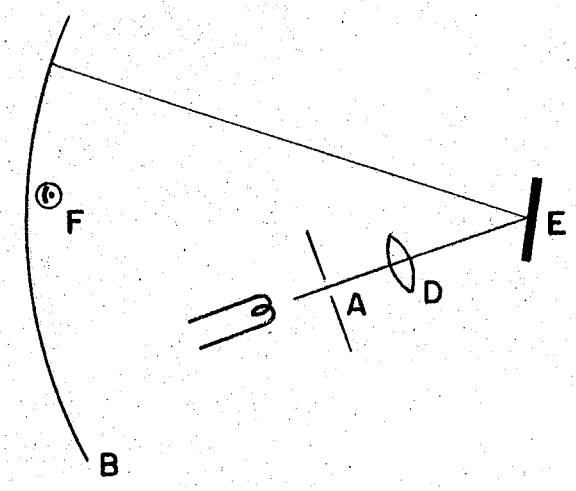

Fig 2.44

2.43 2.44

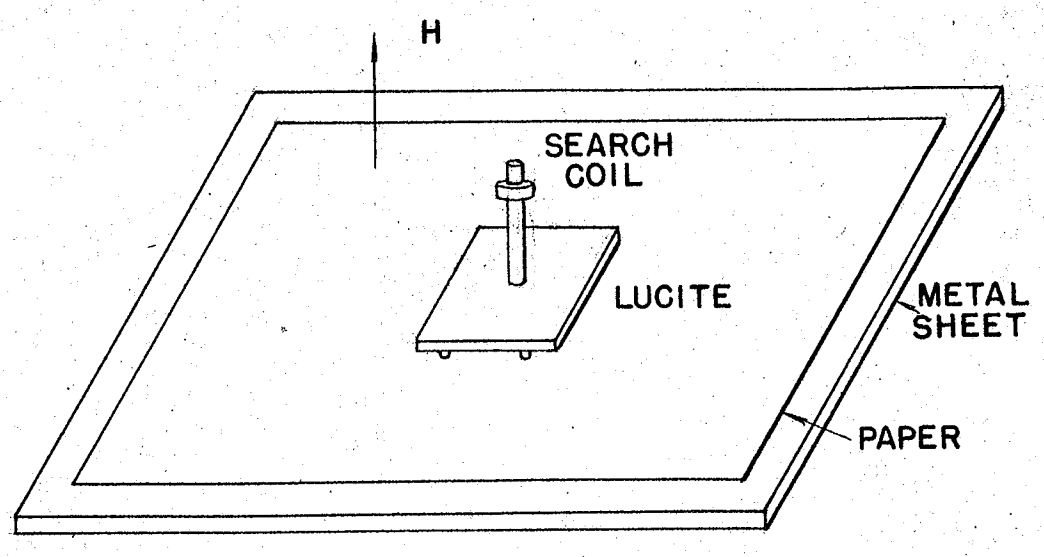

Fig 2.45

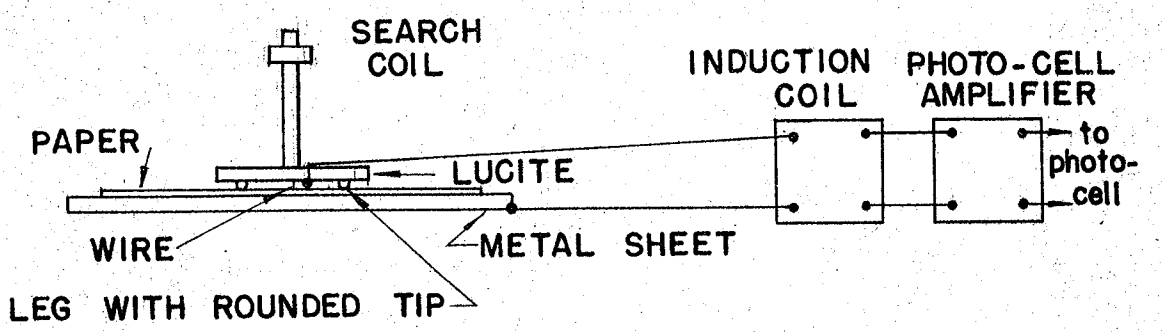

Fig 2.46

2.45
2.46

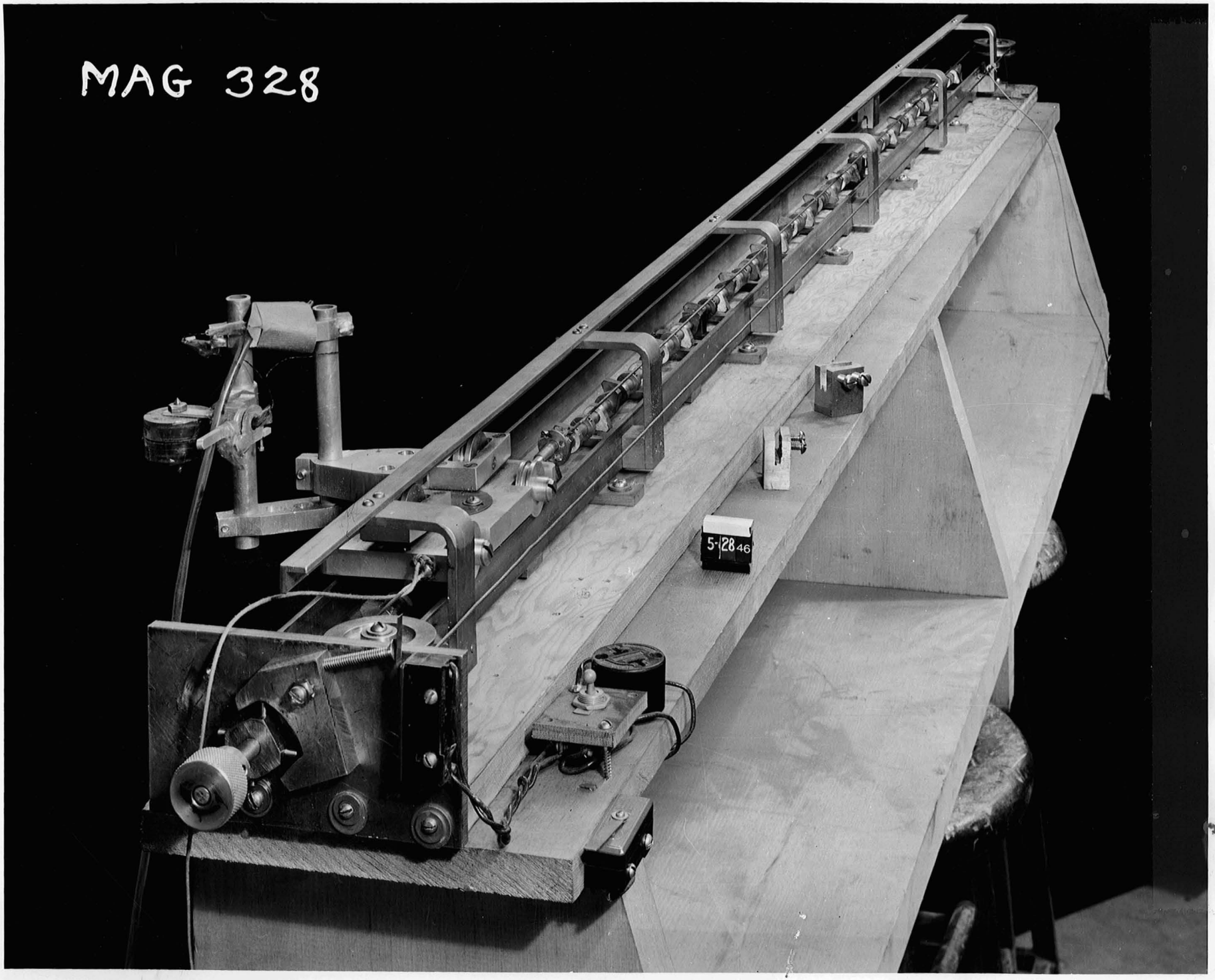
MAG 328
5-28 46

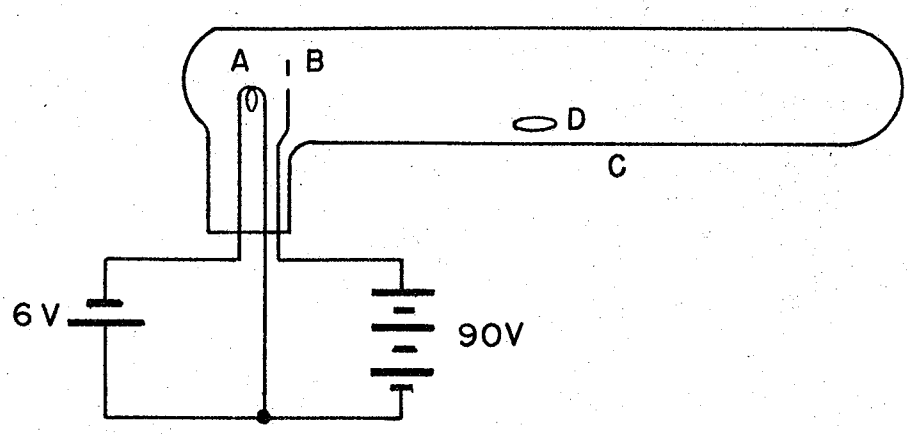

2.48

Z IS CENTER OF FLIP COIL

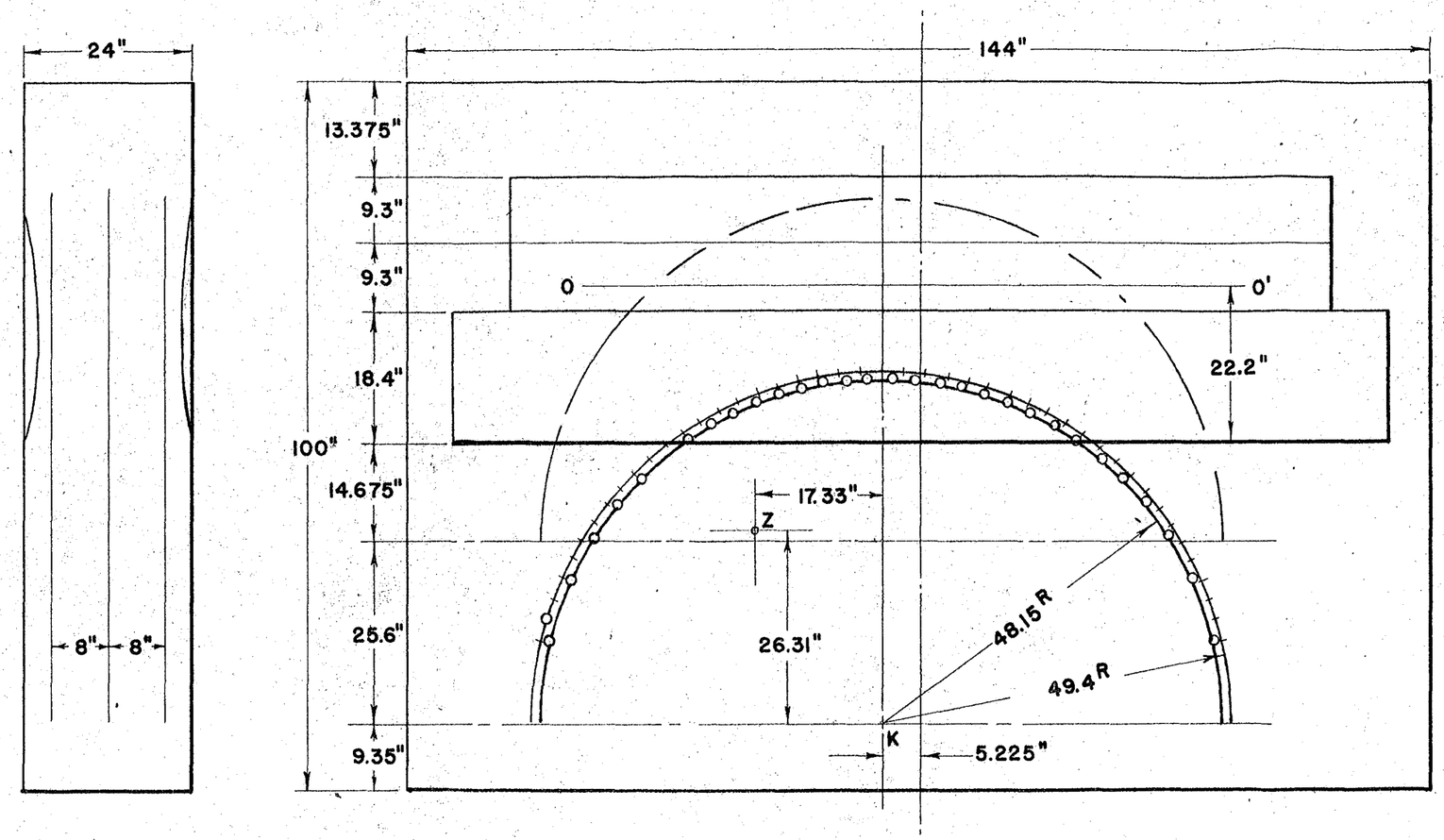

2.49

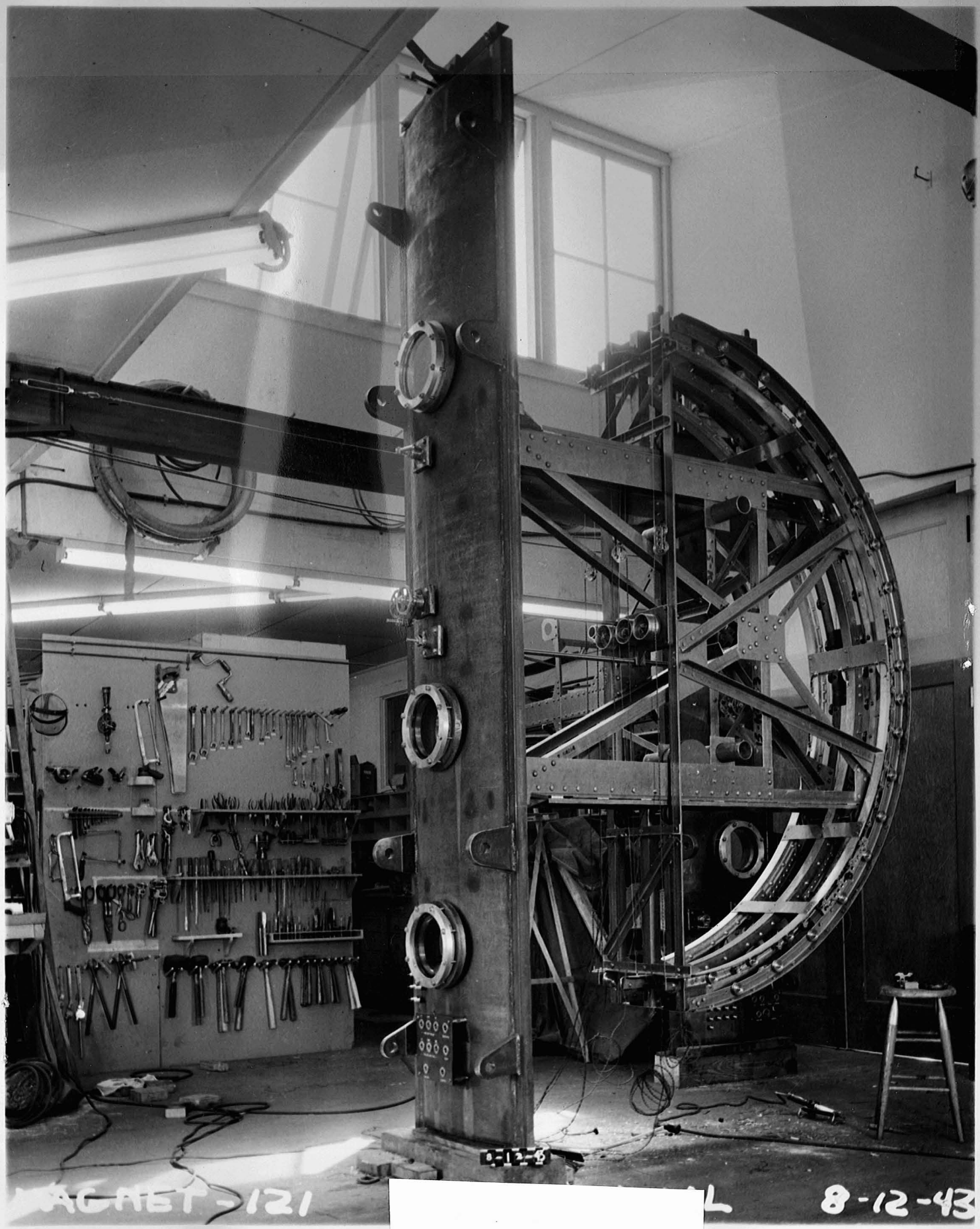

2.20

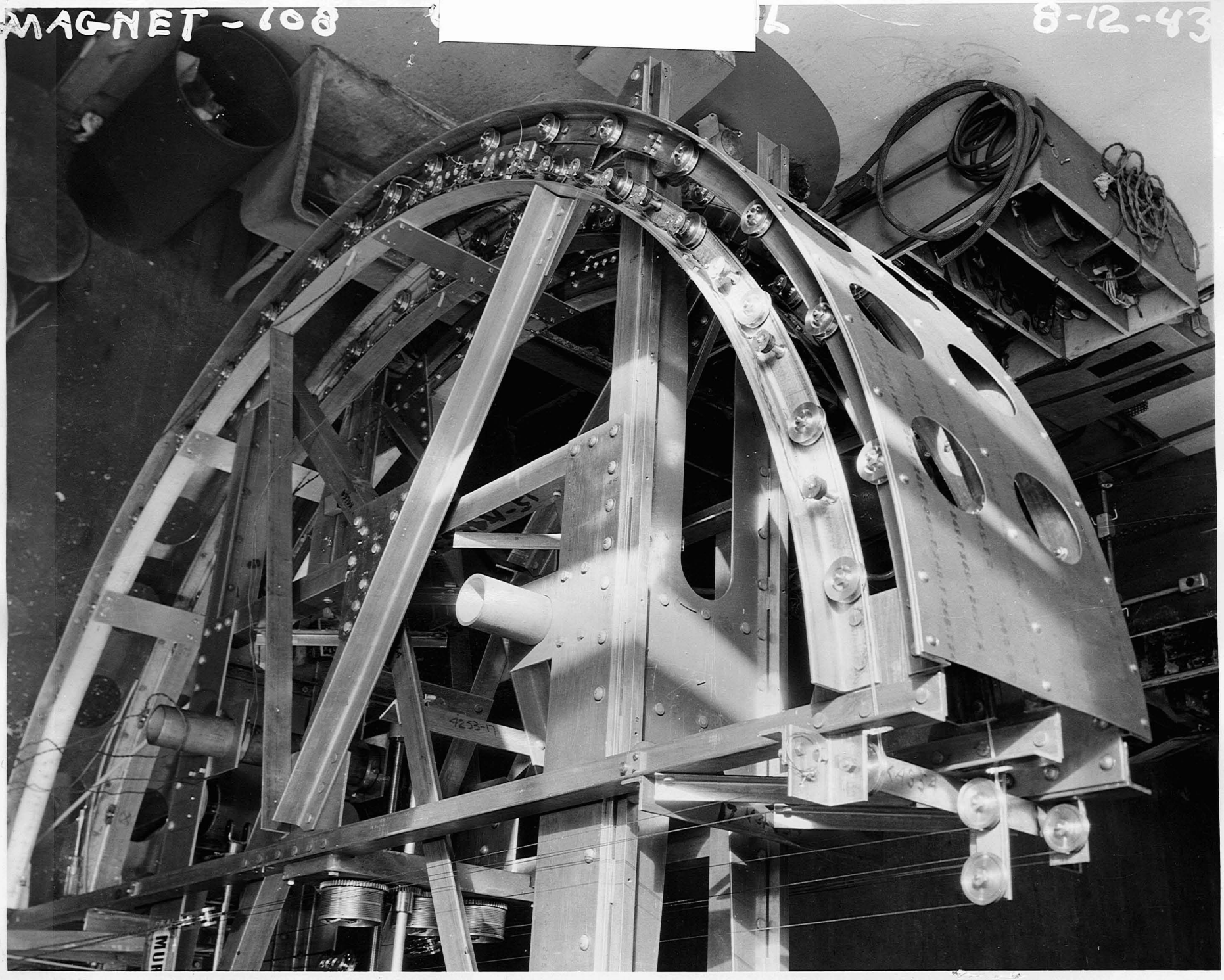
MAGNET - 108
8-12-43

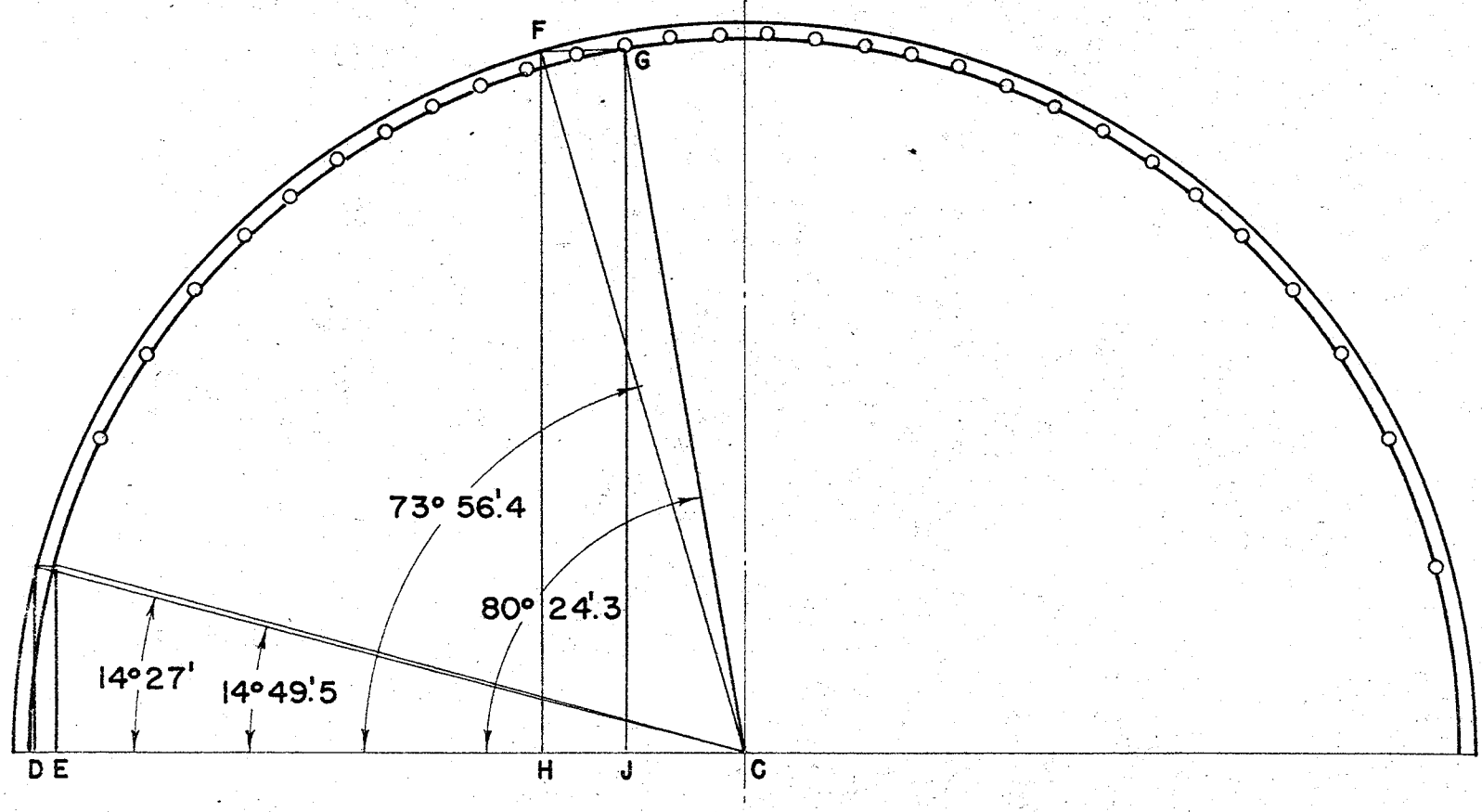
F
G
73° 56'.4
80° 24'.3
14° 27'
14° 49'.5
D E
H
J
C

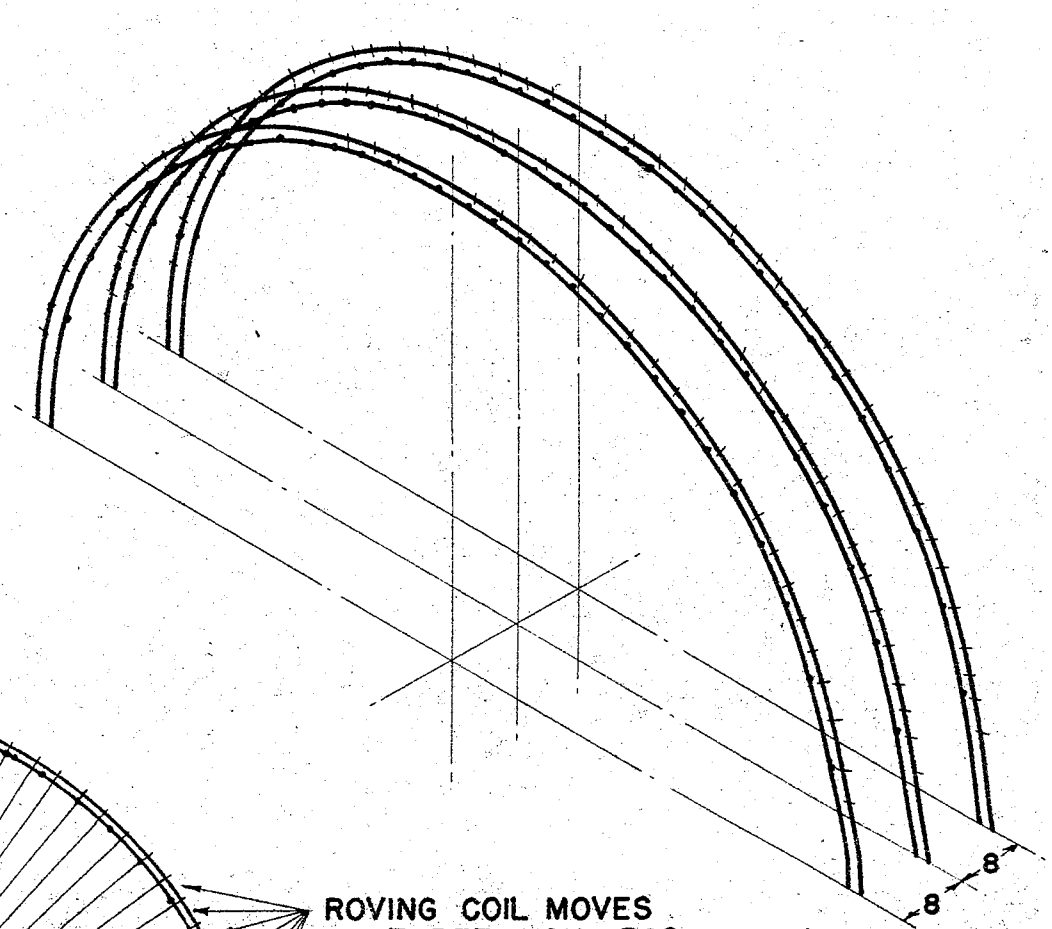
8
8

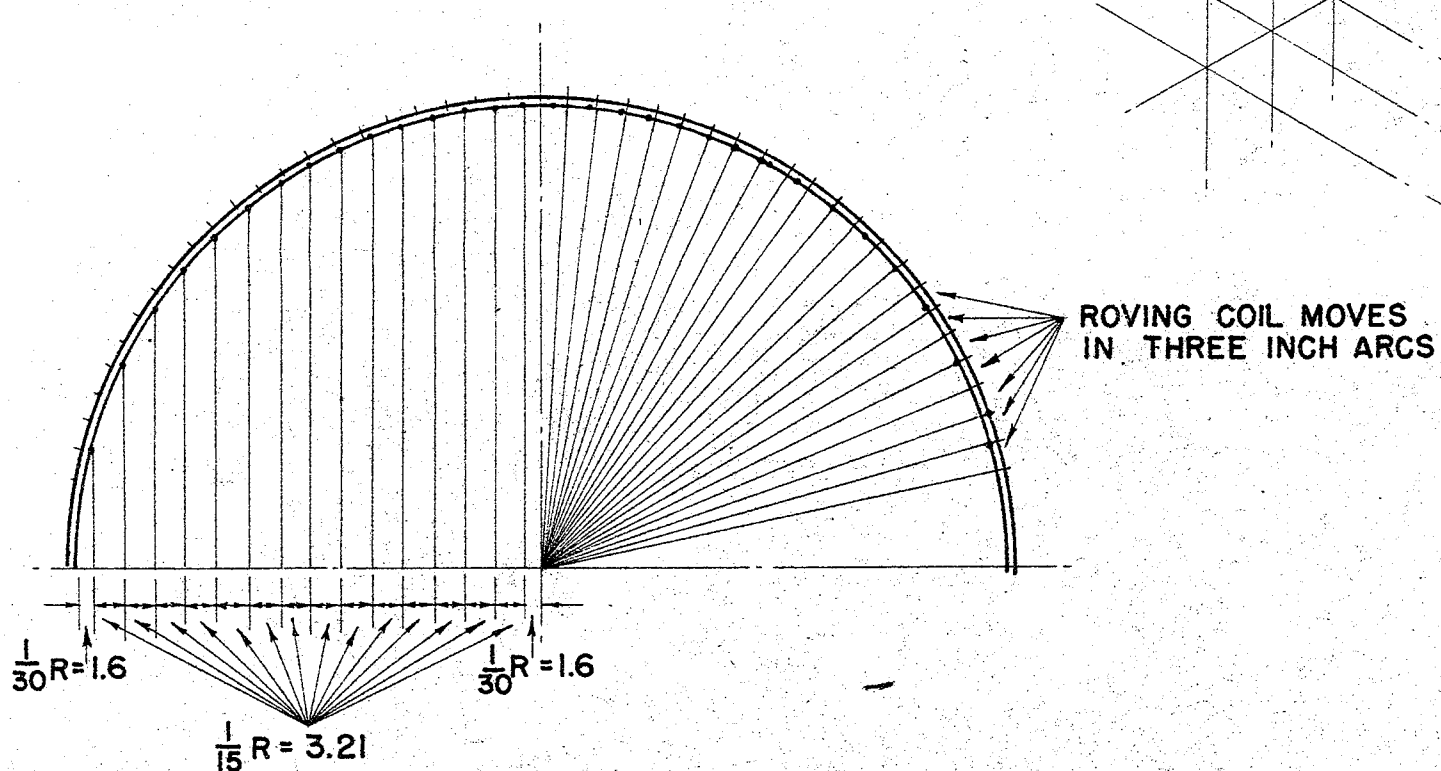
ROVING COIL MOVES
IN THREE INCH ARCS
1/30 R = 1.6
1/30 R = 1.6
1/15 R = 3.21

Film 2004

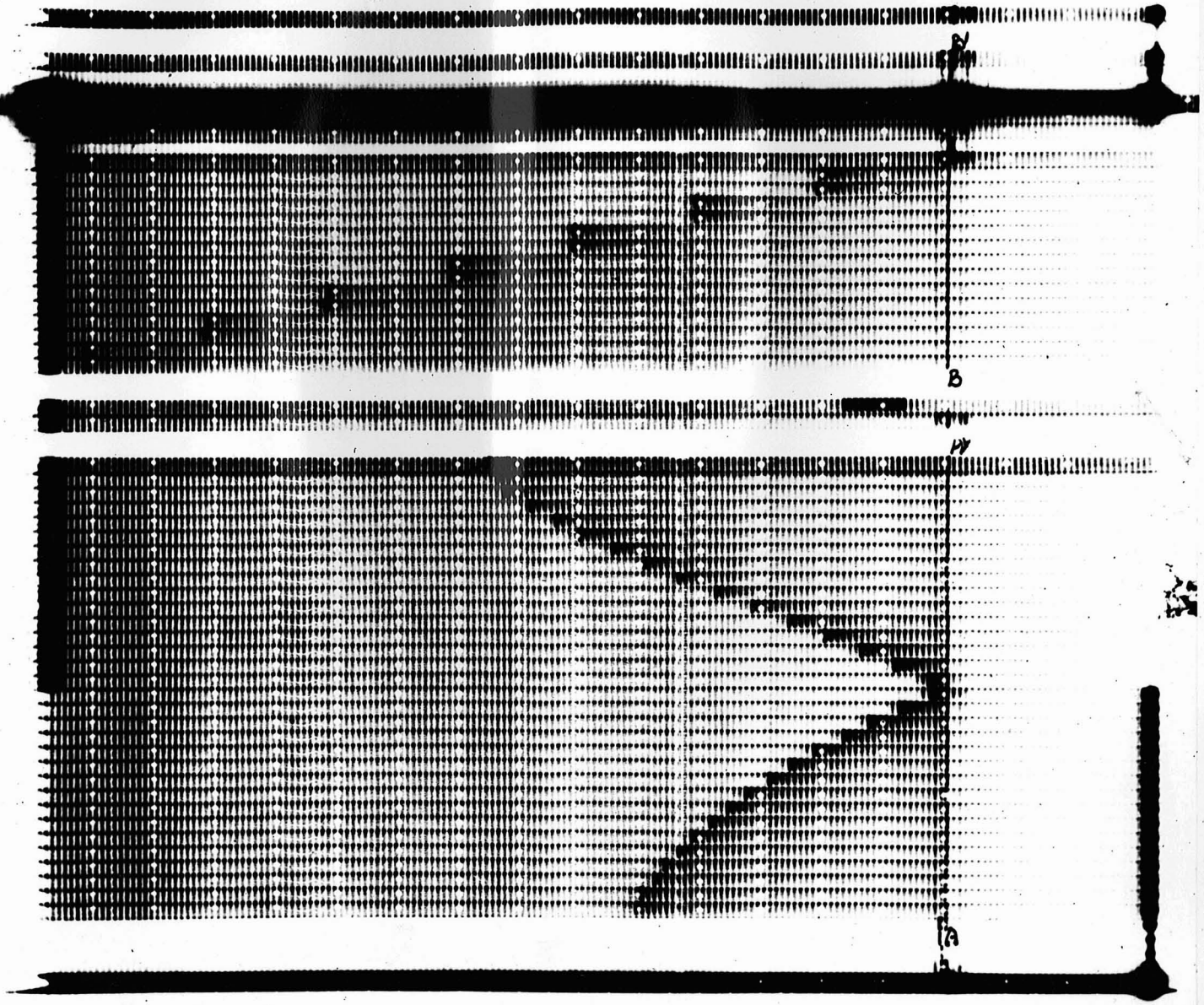

Fig. 2.53

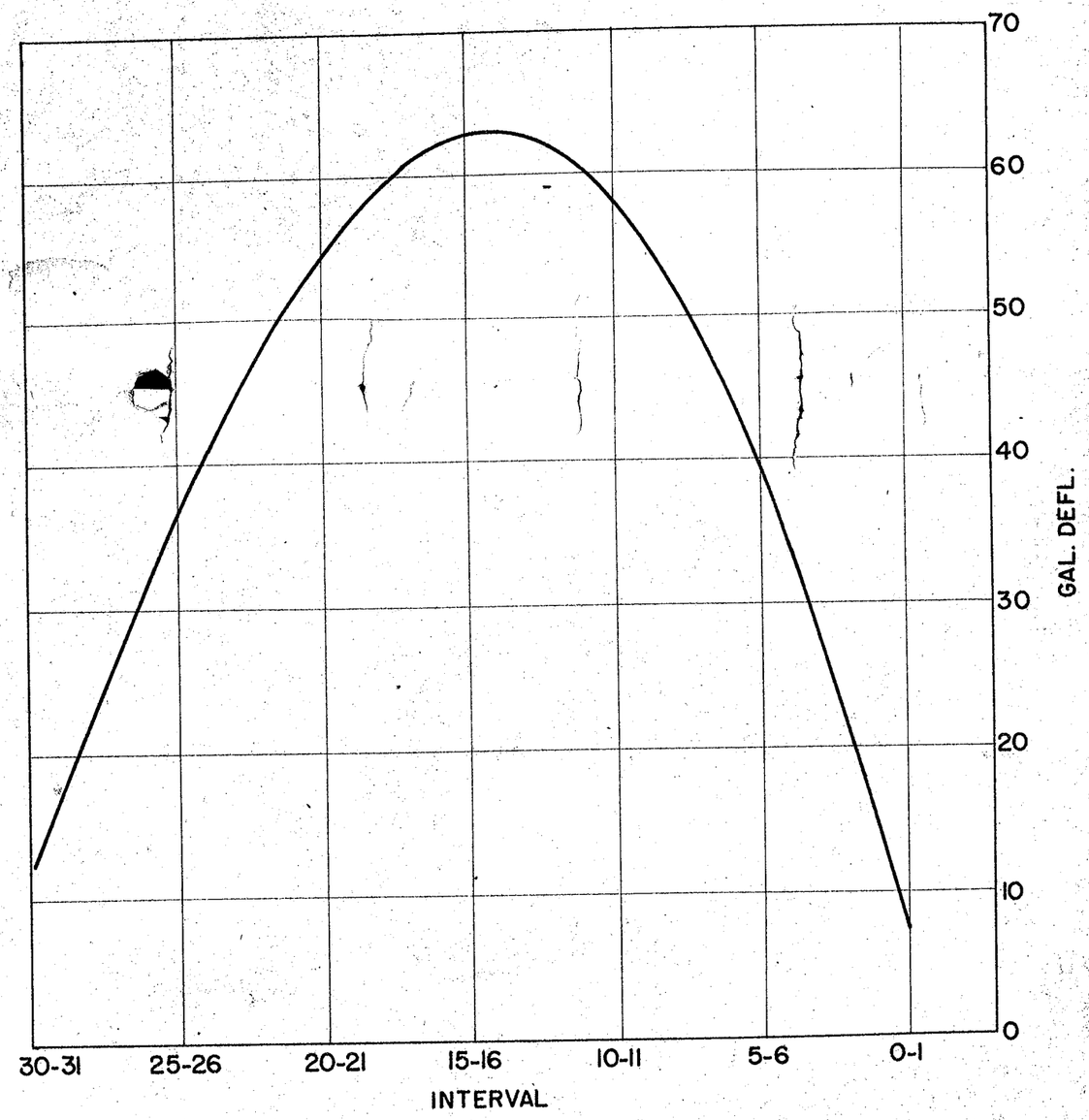
70
60
50
40
30
20
10
0
GAL. DEFL.
30-31
25-26
20-21
15-16
10-11
5-6
0-1
INTERVAL

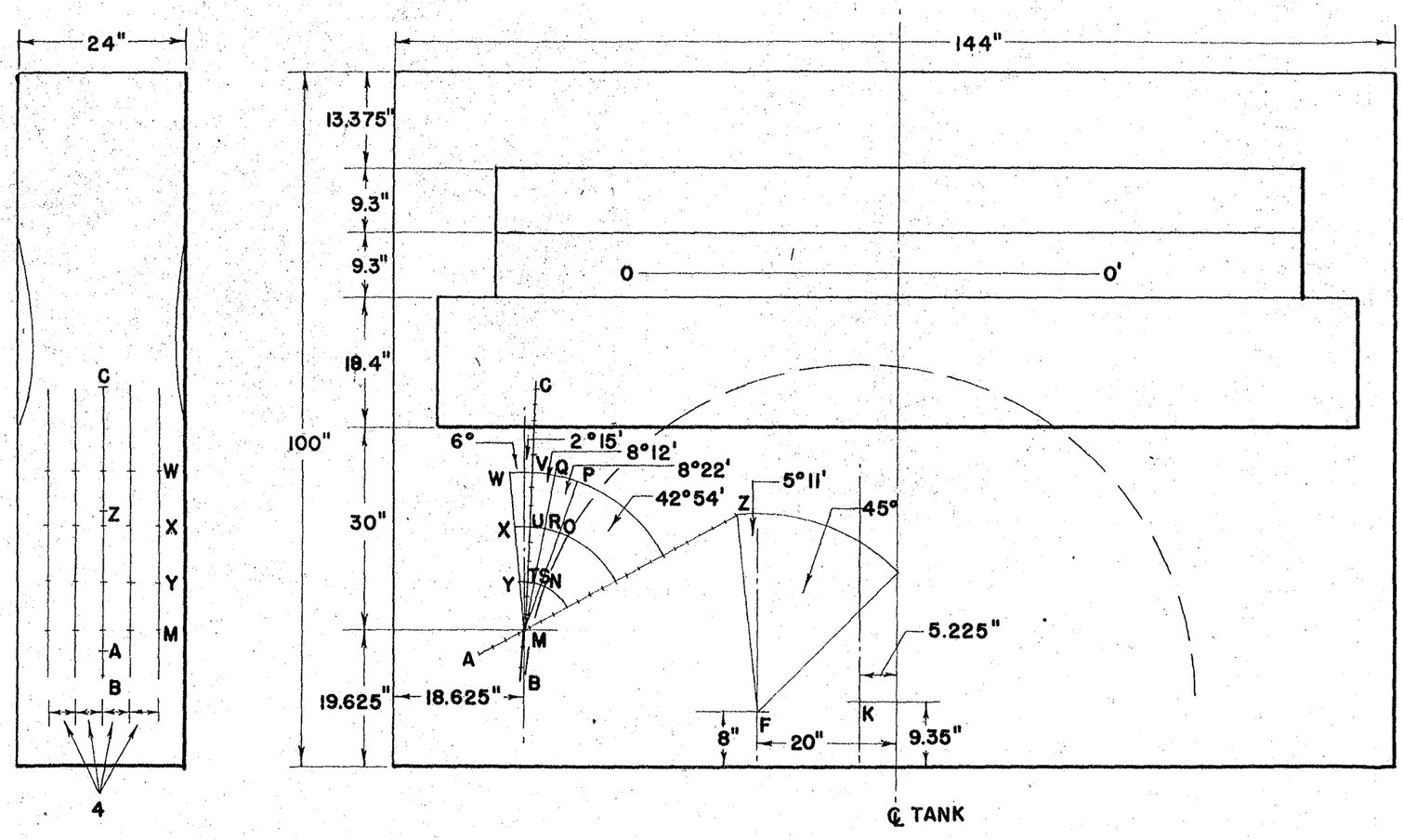
24"
144"
13.375"
9.3"
9.3"
19.4"
100"
30"
19.625"
18.625"
0
0'
C
W
X
Y
M
Z
A
B
4
6°
2°15'
8°12'
8°22'
42°54'
5°11'
45°
V
Q
P
U
R
O
T
S
N
5.225"
8"
F
20"
K
9.35"
℄ TANK

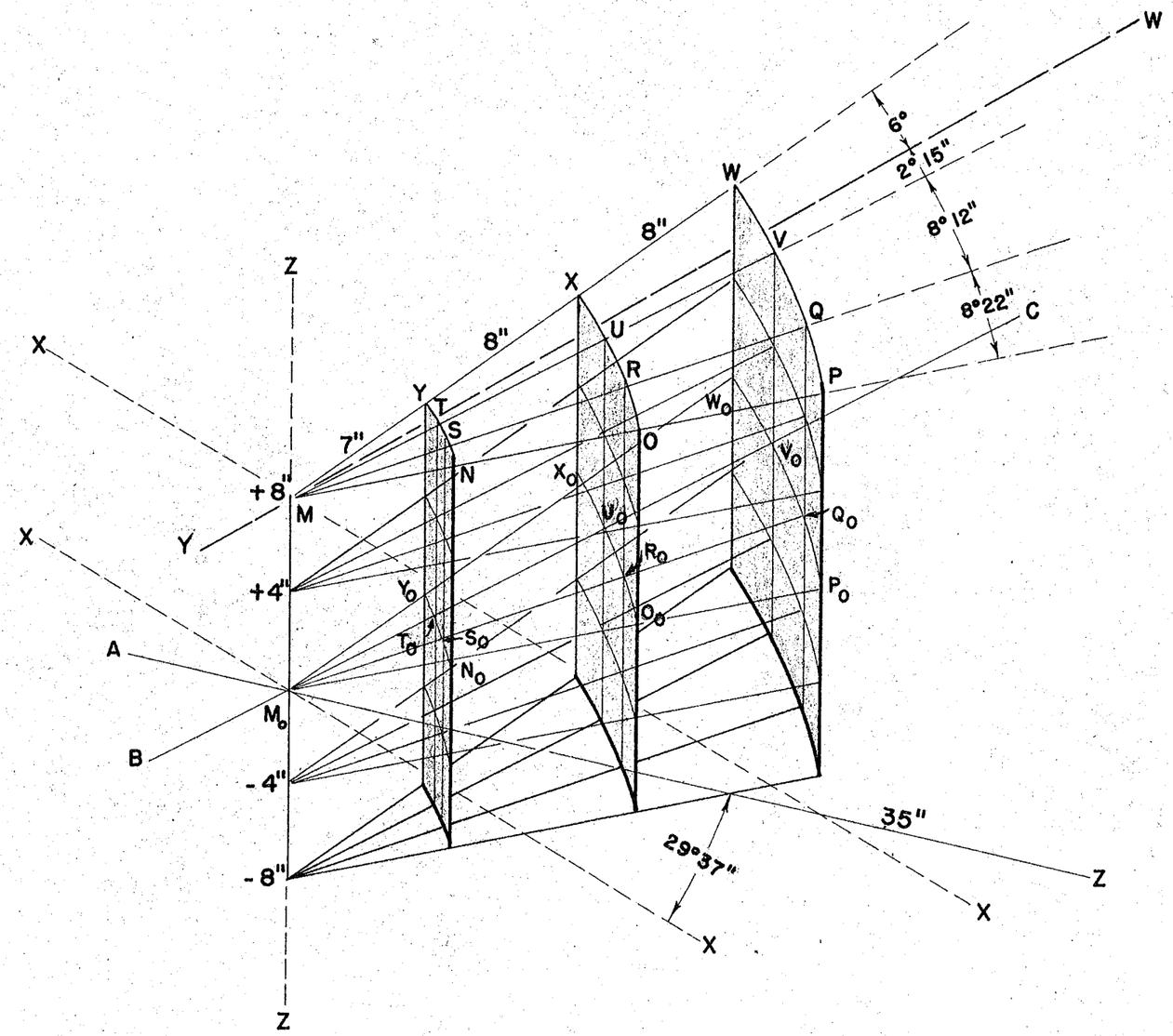
W
6°
2° 15"
8° 12"
8° 22"
C
W
V
Q
P
8"
X
U
R
O
8"
Z
X
Y
T
S
N
7"
+8"
M
Y
X
+4"
A
B
M_0
-4"
-8"
Z
W_0
V_0
Q_0
P_0
X_0
U_0
R_0
O_0
Y_0
T_0
S_0
N_0
35"
29° 37"
Z
X
X

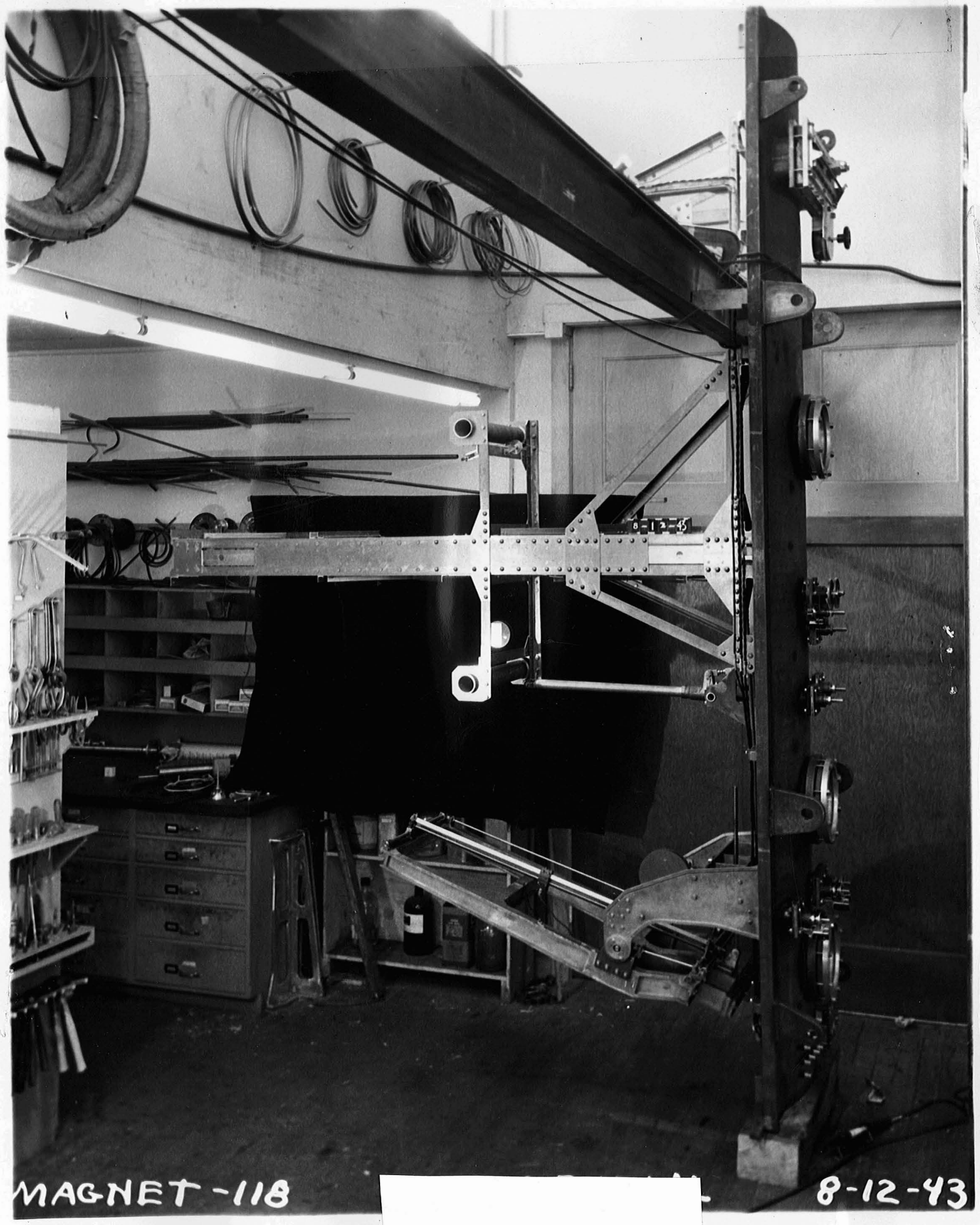

2.57

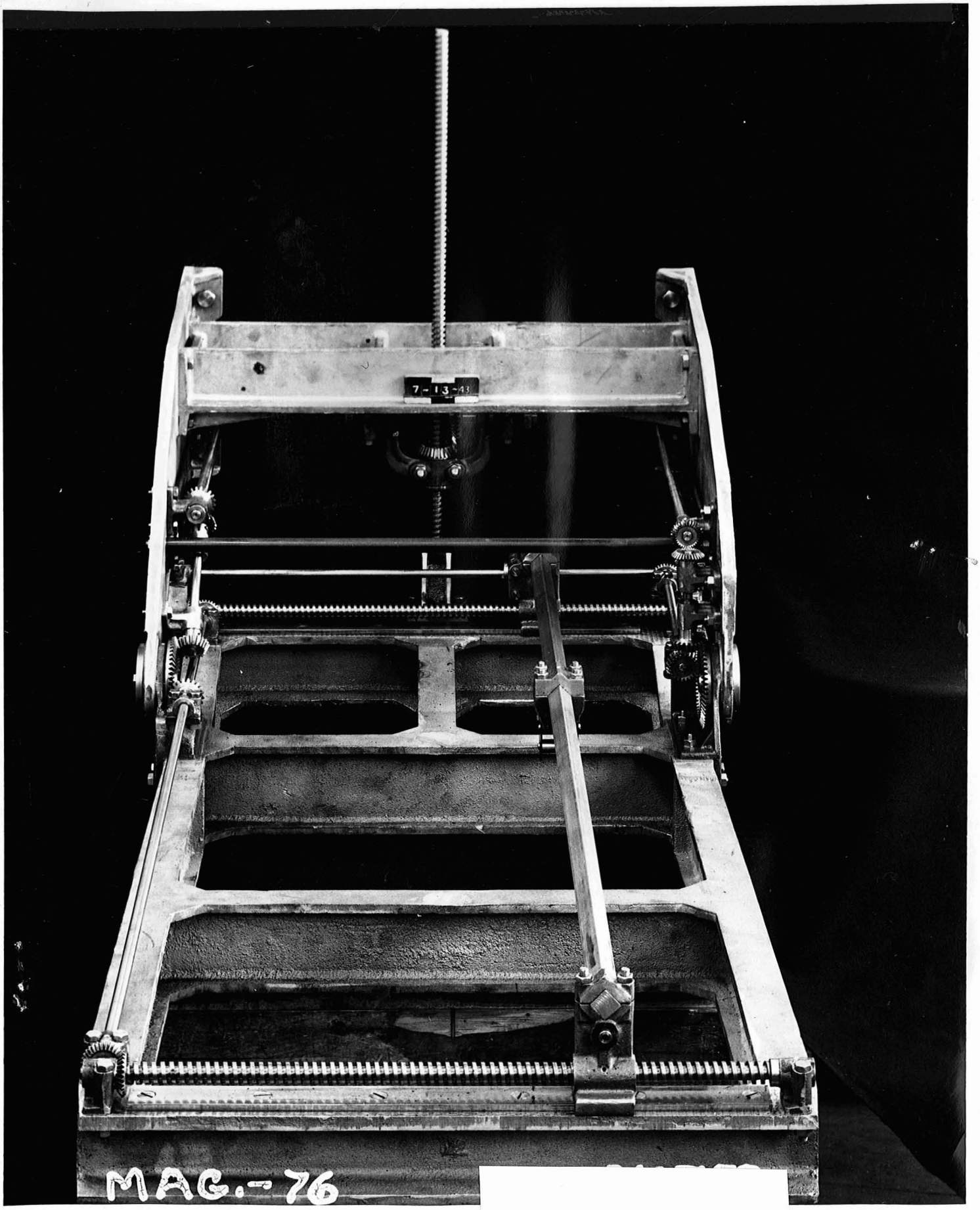
7-13-43
MAG.-76