UCRL 250
Cy. 2

UNIVERSITY OF CALIFORNIA

Radiation Laboratory

TWO-WEEK LOAN COPY

This is a Library Circulating Copy which may be borrowed for two weeks. For a personal retention copy, call Tech. Info. Division, Ext. 5545

BERKELEY, CALIFORNIA

DISCLAIMER

This document was prepared as an account of work sponsored by the United States Government. While this document is believed to contain correct information, neither the United States Government nor any agency thereof, nor the Regents of the University of California, nor any of their employees, makes any warranty, express or implied, or assumes any legal responsibility for the accuracy, completeness, or usefulness of any information, apparatus, product, or process disclosed, or represents that its use would not infringe privately owned rights. Reference herein to any specific commercial product, process, or service by its trade name, trademark, manufacturer, or otherwise, does not necessarily constitute or imply its endorsement, recommendation, or favoring by the United States Government or any agency thereof, or the Regents of the University of California. The views and opinions of authors expressed herein do not necessarily state or reflect those of the United States Government or any agency thereof or the Regents of the University of California.

UCRL 250
Administrative-General

2 -

UNCLASSIFIED

UNIVERSITY OF CALIFORNIA

Radiation Laboratory

Contract No. W-7405-eng-48

PULSE HEIGHT DISTRIBUTION ANALYZER USING A CATHODE RAY TUBE

William E. Glenn

December 8, 1948

Berkeley, California

TABLE OF CONTENTS

Inroduction	3
Chapter I, The Ionization Chamber	6
Chapter II, The Preamplifier	10
Chapter III, The Pulse Shaper and Discriminator	14
Chapter IV, Z-Axis Pulse Generator	19
Chapter V, The Deflection Amplifier and Bias System	21
Chapter VI, The Output Amplifiers	24
Chapter VII, Construction of the Tube	27
Chapter VIII, Results	30
Chapter IX, Further Applications	32

PULSE HEIGHT DISTRIBUTION ANALYZER USING A CATHODE RAY TUBE

William E. Glenn

December 8, 1948

Introduction

An invaluable tool for the study of radioactive isotopes is the pulse analyzer. This is a device which makes it possible to plot a graph of alpha particle energy against the number of particles emitted of that energy. Since a radioactive element which emits alpha particles emits them in discrete energies, it is possible to detect the presence of extremely small quantities of such elements by analyzing the pulse height distribution of the pulses from an ionization chamber in which the sample has been placed. This is analogous to detecting the presence of an element by its light or X-ray spectrum with the light or X-ray energy replaced by the alpha particle energy.

The currently used pulse analyzers consist of an ionization chamber, pulse height selector, and a battery of registers to record the data. The sample is placed in the ionization chamber, which is connected to a pulse amplifier. The pulses from the chamber have a height proportional to the energy of the alpha particle causing the pulse. These pulses are then separated into groups of pulses between two predetermined pulse heights by a series of biased tubes. The number of pulses in each group are then counted by a mechanical register. This gives a plot of the number of pulses which occur, of a given pulse height, against the pulse height. This is also a plot of the number of alpha particles of a given energy against the energy of the particle.

The purpose of this project is to develop a pulse analyzer which is more

reliable, more accurate, and faster than the ones used at present.

One of the outstanding difficulties with the present pulse analyzer is that of the drift of individual channels because of a drift in bias or tube characteristic in that channel. This is a much more serious difficulty than that of drift of the whole system, since it will give a false peak in the alpha spectrum which cannot be distinguished from a peak due to a radioacitve isotope. By the use of a cathode-ray-tube pulse height selector, this difficulty can be eliminated. Such a pulse height selector is shown in Fig. 1.

The pulse (a) from the ionization chamber (3) to be analyzed is shaped so that it has a flat top (b) and is applied to the deflection electrode (8) of the cathode-ray gun. The electron beam, which is normally off, is turned on at the peak of the pulse by a square pulse applied to the intensity grid (5) of the electron gun. The beam is then turned on at a position corresponding to the height of the applied pulse. A series of anodes (10) across the screen of the cathode-ray-tube collect the current from the beam, and a series of mechanical registers (12) count the number of times the beam strikes a given plate. This gives a count of the number of pulses which occur between two given pulse heights.

Since the channel width and relative position is a function only of the physical width and position of the anodes in the tube, there can be no individual register drift. This type of pulse height selection has the added advantages of being faster, and more easily stabalized than the conventional system using biased tubes.

The tube described above has other applications which are mentioned in Chapter IX.

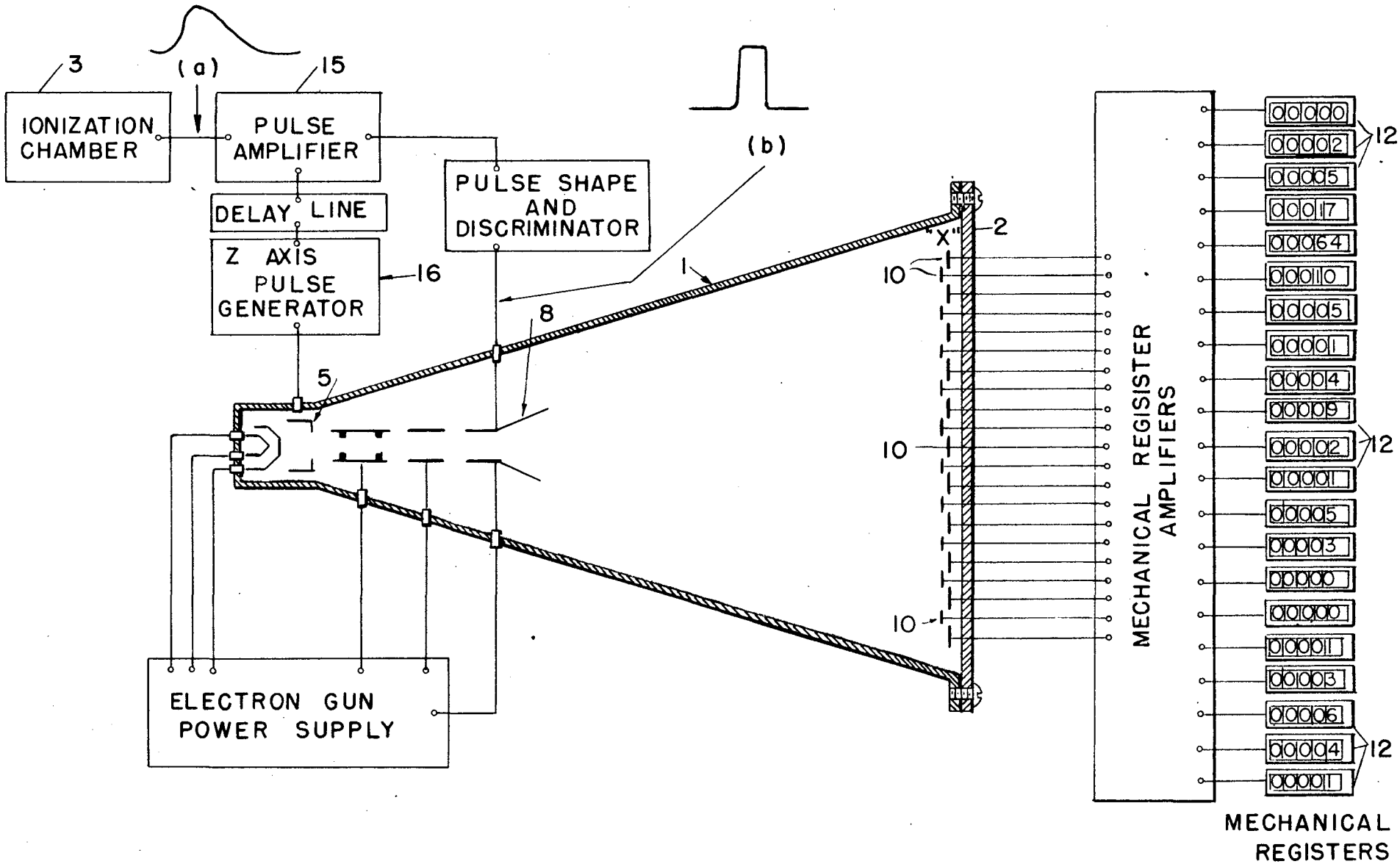

FIG. 1

MECHANICAL REGISTERS

13170-

CHAPTER I

The Ionization Chamber

The purpose of the ionization chamber is to give pulses of a height proportional to the energy of the alpha particle being analyzed.

There are two types of ionization chambers in common use with pulse analyzers: the two-electrode chamber and the grid chamber shown in Fig. 2-A and B. The particular two-electrode chamber and grid chamber used with the present pulse analyzer was designed by Mr. A. Ghiroso of the University of California Radiation Laboratory.

The chamber is filled with argon at a little above atmospheric pressure, and the sample to be analyzed is placed in the sample position (a). The alpha particles emitted from the sample expend their energy in ionizing the gas (b).

The negative ions, which in gases such as argon are free electrons, are attracted to the anode and are collected much faster than the positive ions because of their higher mobility. Since the change in voltage on the anode (c) is caused by the drift of the electrons in the electric field, the fast pulse output is due mostly to the electron drift and has a height proportional to the total number of electrons, which is proportional to the energy of the alpha particle.

The two-electrode ionization chamber used has a non-uniform electric field. The pulse shape output is, therefore, approximately that shown in Fig. 3-A. For this type of chamber, best resolution can be obtained only by taking the total pulse height and empirically shaping the pulse for best results.

Some of the errors causing poor resolution in such a chamber are:

(1.) improper gas mixture, causing poor ionization properties

(2.) variation in pulse height because of ions drifting different distances as a result of alpha particles being emitted at different angles;

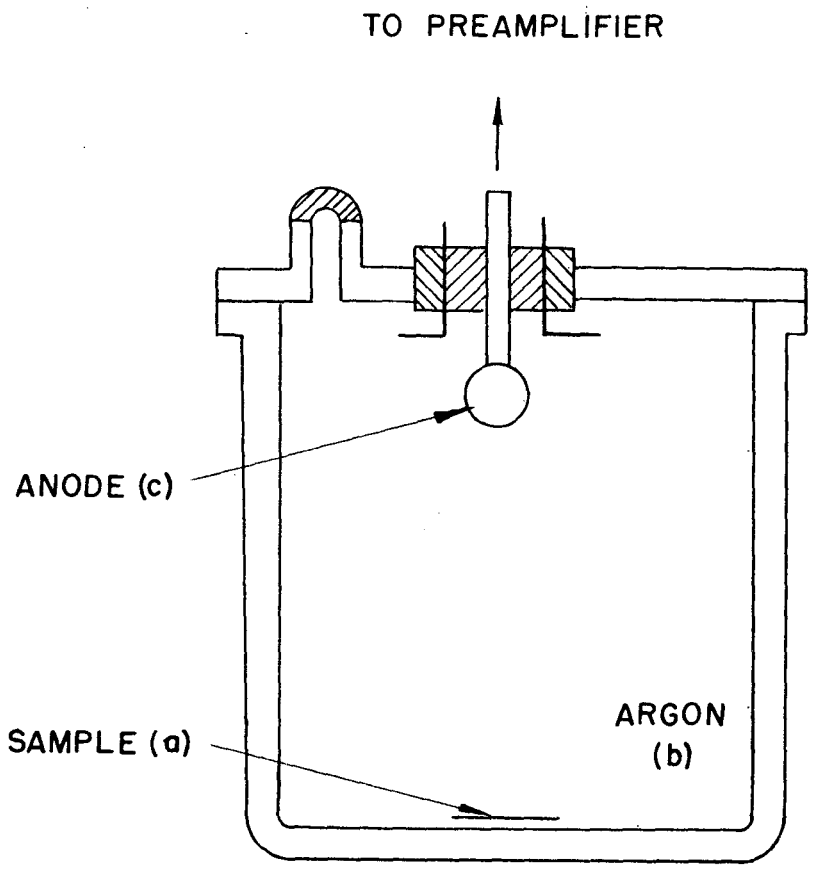

(A)

TWO ELECTRODE CHAMBER

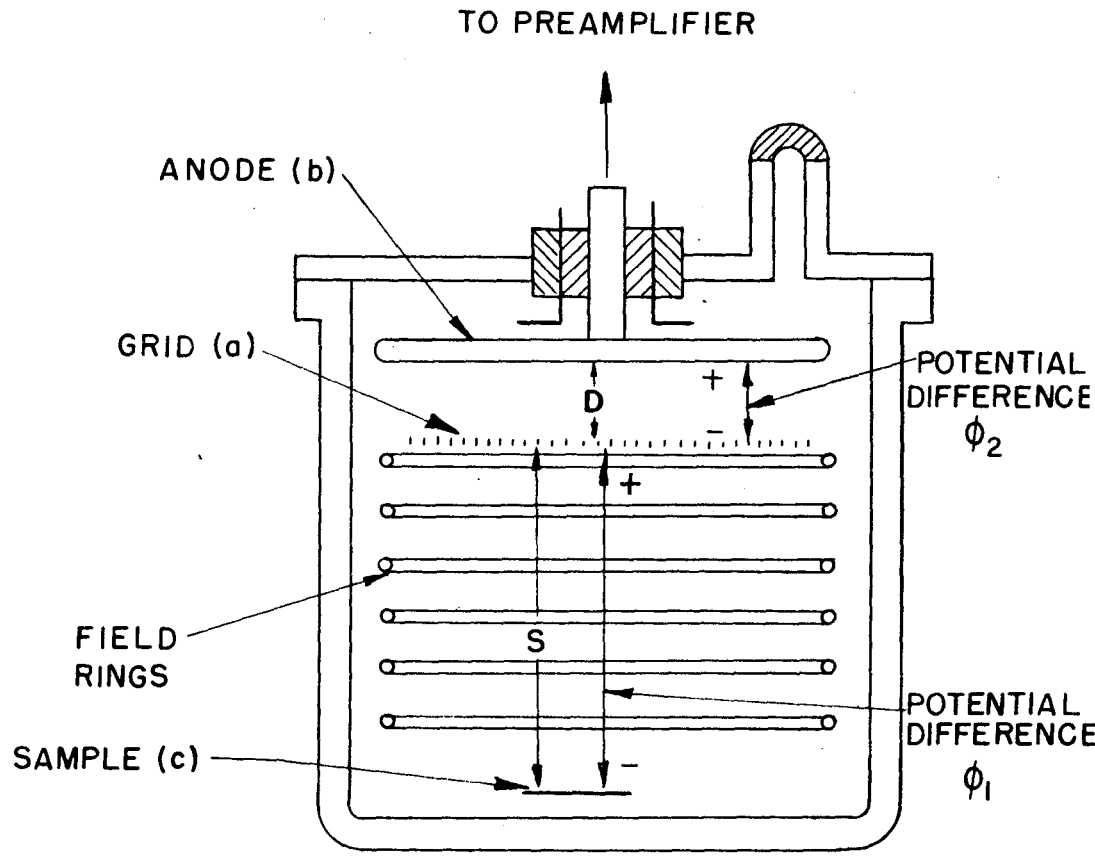

(B)

GRID CHAMBER

FIG. 2

SHOWING TWO ELECTRODE CHAMBER & GRID CHAMBER

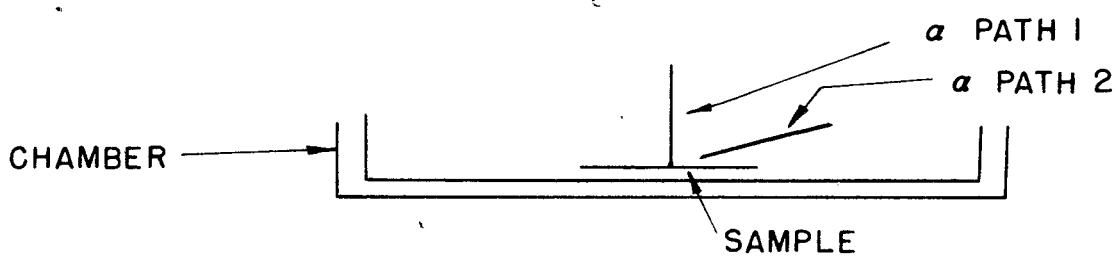

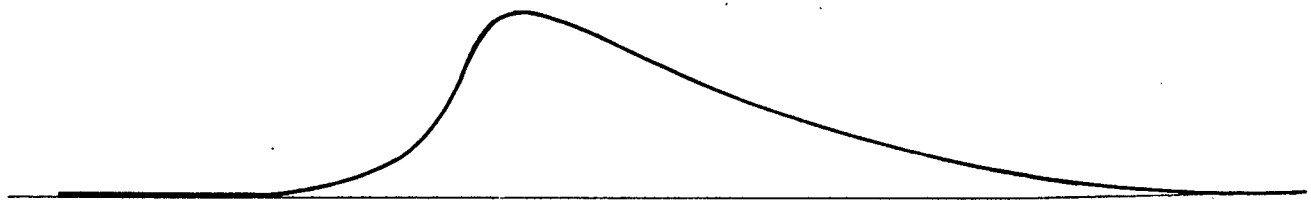

(A)

PULSE FROM TWO ELECTRODE CHAMBER

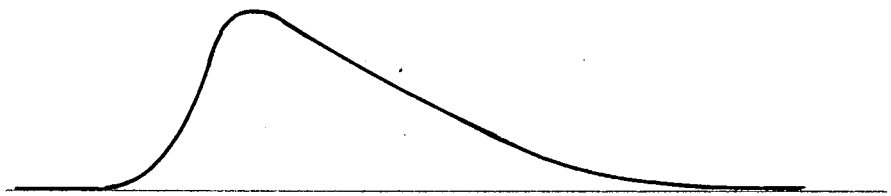

(B)

PULSE FROM GRID CHAMBER PATH 1

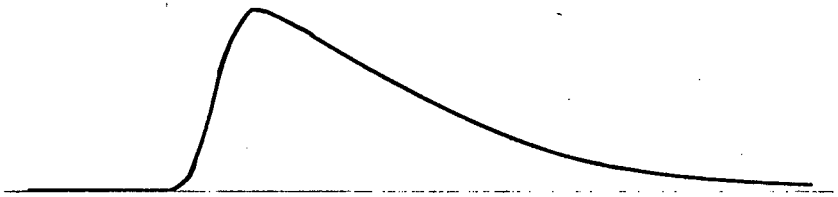

(C)

PULSE FROM GRID CHAMBER PATH 2

(C)

DERIVATIVE OF (B)

(D)

DERIVATIVE OF (C)

FIG. 3

PULSE FROM TWO ELECTRODE CHAMBER

13172-1

(3.) positive ion drift affecting the anode voltage;

(4.) difficulty in amplifying the pulse accurately;

(5.) difficulty in shaping the pulse, since the devivative of the pulse is not an accurate function of the alpha particle energy.

Most of these difficulties may be overcome by using a grid chamber as shown in Fig. 2-B. This type of chamber has the anode (b) shielded from the effect of the positive ion drift by the grid (a). The electrons all drift the same distance and through the same difference of potential between the grid (a) and anode (b), so that the pulse height is more closely proportional to the total number of electrons, regardless of the position at which the ions are formed.

Since the field is uniform between the grid and anode, the derivative of the pulse will be proportional to the alpha particle energy provided the distance (D) between the grid and anode is greater than $\frac{(2S-2S^2-RS-R)\,\phi_1}{\phi_2}$ where R is the maximum range of the particle, ϕ_1 is the potential between the sample (c) and grid, ϕ_2 is the potential between grid and anode, and S is the distance between the grid and the sample.

This condition is imposed since the maximum slope is always proportional to the number of ions formed only if all of the ions formed are drifting between the grid and anode at the same time at some time during the collection period. This is true only if the distance from the grid to the anode is large enough that the electrons will not start to be collected until all of them have come through the grid.

Typical pulses from such a chamber are shown in Fig. 3-B and C for different angles of the particle. The derivative of these pulses is shown in Fig. 3-D and E.

CHAPTER II

The Preamplifier

Since the pulse from the ionization chamber is only of the order of a millivolt, it is necessary to have a preamplifier on the chamber to amplify the signal from the chamber to a high enough voltage to be handled easily in the following circuits. Because of the shapers that follow the preamplifier, it is necessary to preserve the shape of the pulse very accurately. Since the instrument is measuring small differences in pulse height, it is necessary that the gain of the amplifier be very constant and the signal to noise ratio be very high.

The pulse from the ionization chamber is a triangular pulse as shown in Fig. 3-A with a rise time of the order of one microsecond and a decay time of several milliseconds.

The rise time is determined by the transit time of the electrons in the ionization chamber, and the decay time is determined by the R_1C_1 time constant of the anode where R_1 is the input resistance of the amplifier and C_1 is the tube input and chamber capacity shown in Fig. 4. To preserve this pulse shape, a band pass of from about 20 cycles to about 2 megacycles is necessary.

An amplifier with the required characteristics was designed and is shown in Fig. 4.

A number of input tubes and input circuits were tried. The most satisfactory tube for signal to noise ratio was a 6AK5 connected as a pentode with a low plate voltage as shown in Fig. 4.

The noise in the input is due primarily to tube noise and resistor noise. The random tube noise is of the order of 10 microvolts. The thermal resistor noise for low resistances is approximately proportional to the square root of

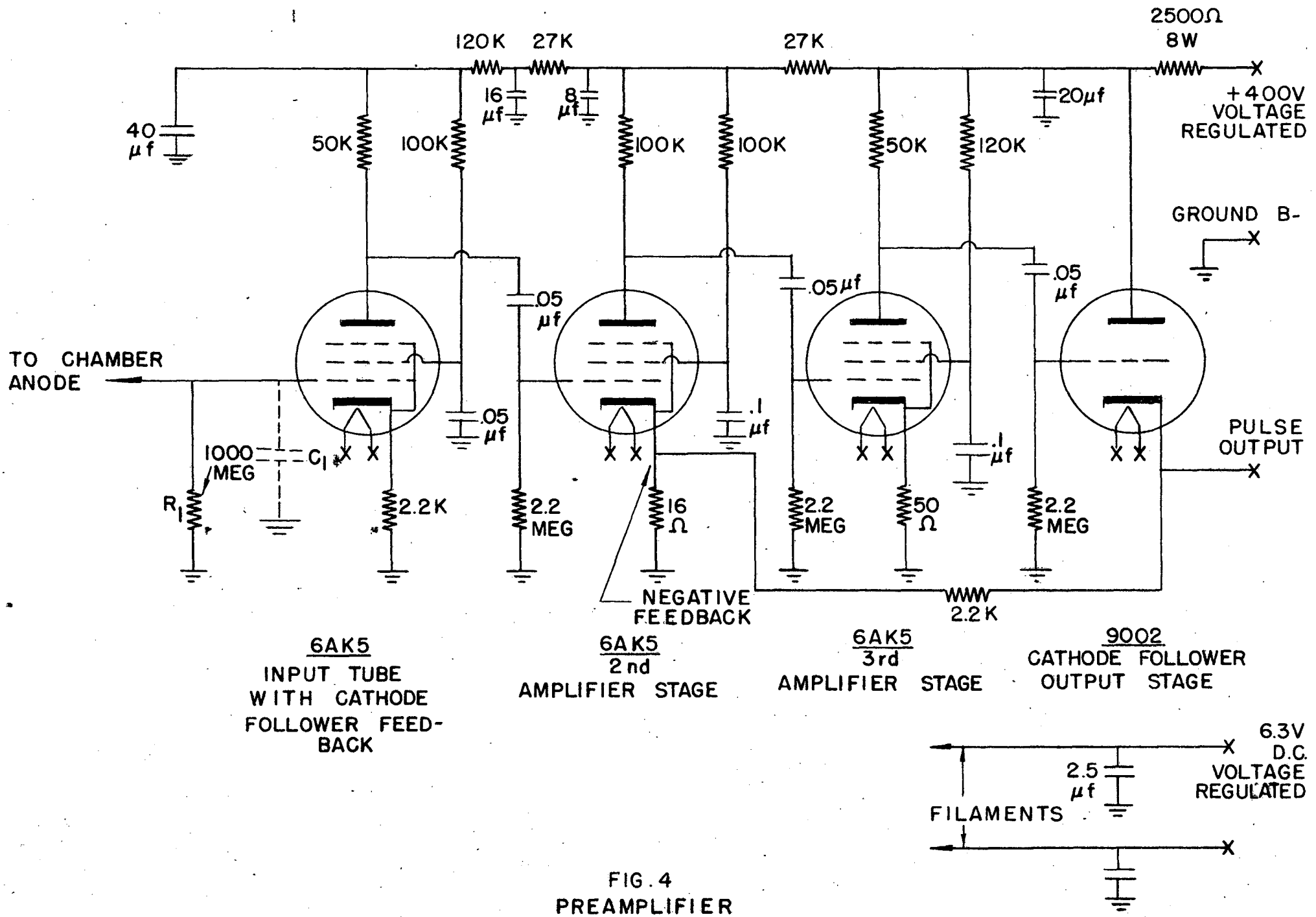

FIG. 4
PREAMPLIFIER

13175-1

the input resistor R_1. For high resistances (10 megohms or more) the thermal resistor noise is by-passed to some extent by the input capacity C_1 of the preamplifier. The resistor noise is more effectively by-passed for high resistances since the resistance is in series with the resistor noise voltage e_n as shown in Fig. 5.

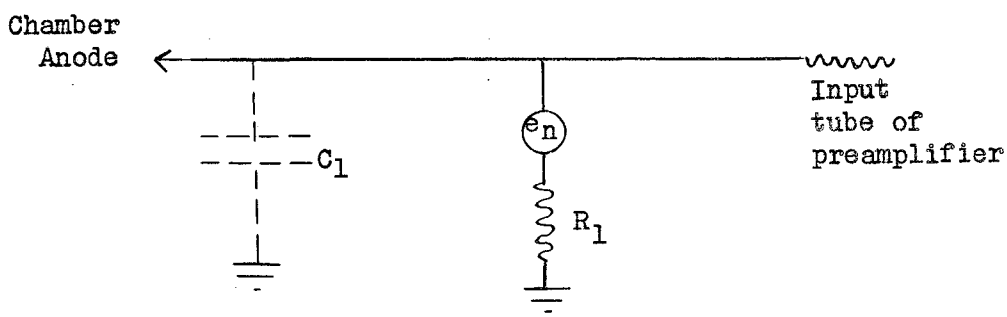

Figure 5

The hum level was reduced by using a D. C. filament supply and a well-filtered, doubly-regulated power supply.

The gain, A, of the second and third stages and the cathode follower of the preamplifier was about 1500 without feed back and was stabalized at about 150 by the use of negative feed back. The feed back, β, for these stages was about 1/150, giving an $A\beta$ of about 10. Since the stability of an amplifier with negative feed back is increased by a gain stabalization factor of $1 + A\beta$, there will be a change in gain of only 1% for every 11% change in amplifier gain without feed back.

The gain stabalization factor provided by using cathode follower feed back for a triode is given by:

$$\frac{\text{gain change without feed back}}{\text{gain change with feed back}} = \frac{R_o}{R_k}$$

where:

$$R_o = \frac{(R_p + R_b)}{(1 + \mu)}$$

R_o is the output impedance of the cathode follower with an infinite cathode resistor. R_k is the resistance of the cathode resistor. R_p is the plate resistance of the tube and R_b is the plate load resistor as shown in Fig. 6.

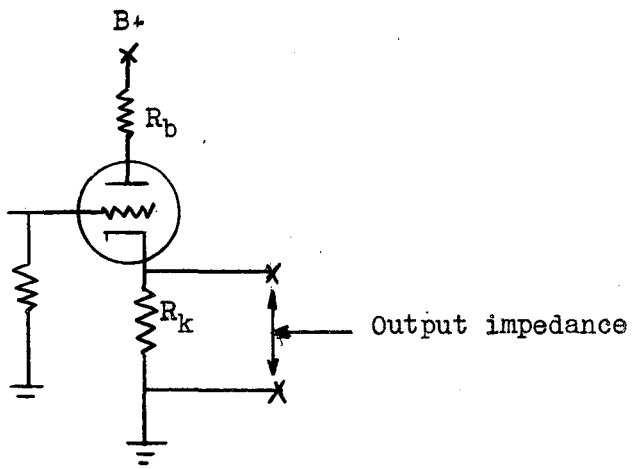

Figure 6

The output impedance of the cathode follower is: $\frac{R_o R_k}{R_o + R_k}$

The input stage of the preamplifier uses cathode follower feed back. Since it is a pentode instead of a triode, the stabilization factor will be slightly more than the value derived above.

To add to the stability, the filament supply is regulated by shunting it with a storage battery. The high voltage supply is also very well regulated. The high voltage supply and filament supply for the preamplifier and other amplifiers is shown in the master circuit diagram on the last page of the thesis.

CHAPTER III

The Pulse Shaper and Discriminator

After the pulse from the ionization chamber has been amplified, it is a broad triangular pulse as shown in Fig. 7-(a). The pulse must then be shaped for two reasons:

(1.) Since the pulse has a long decay time, a pulse occuring before the preceeding pulse has returned to zero voltage, will register an incorrect pulse height. It is therefore necessary to have the pulse return to zero as soon as possible.

(2.) Since the random noise is uniformly distributed over all frequencies, it has an RMS amplitude proportional to the square root of the band width. The signal to noise ratio will therefore be increased if the pulse height is preserved and the band width of the shaper is reduced.

Two methods of shaping the pulse are in common use. The least satisfactory method of shaping, although it is much simpler, is a differentiating circuit.

The derivative of the applied pulse is obtained by applying the pulse to an RC circuit shown in Fig. 8, and taking the derivative of the pulse across the resistor as shown.

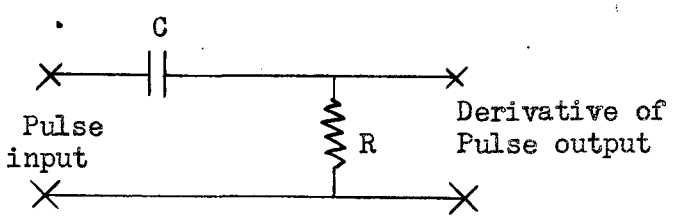

Figure 8

For this to be a good approximation of the derivative, the RC of the circuit must be short compared with the rise time of the applied pulse. It may be used only if the maximum slope of the leading edge of the pulse is propor-

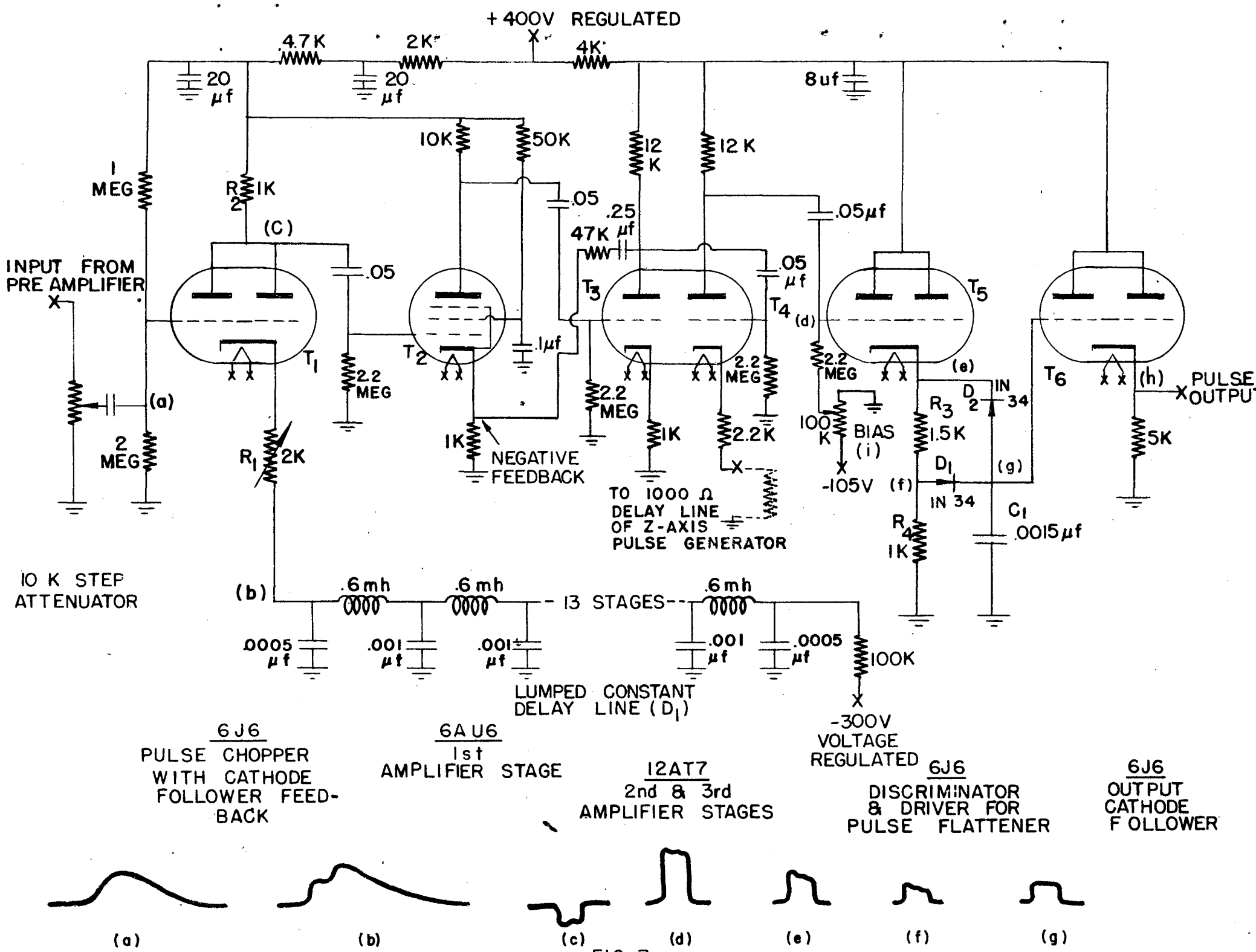
+400V REGULATED
4.7K
2K
4K
20 μf
20 μf
8uf
10K
50K
12 K
12 K
1 MEG
R2 1K
.05
.25 μf
47K
.05μf
.05 μf
(C)
INPUT FROM PRE AMPLIFIER
.05
T3
T4
(d)
T5
T1
T2
.1μf
2.2 MEG
2.2 MEG
2.2 MEG
2.2 MEG
(e)
T6
(h)
PULSE OUTPUT
D2 IN 34
(a)
2 MEG
R1 2K
1K
NEGATIVE FEEDBACK
1K
2.2K
100 K
BIAS (i)
R3 1.5K
5K
D1
(g)
-105V (f)
IN 34
TO 1000 Ω DELAY LINE OF Z-AXIS PULSE GENERATOR
R4 1K
C1 .0015μf
10 K STEP ATTENUATOR
(b)
.6 mh
.6 mh
13 STAGES
.6 mh
.0005 μf
.001 μf
.001 μf
.001 μf
.0005 μf
100K
LUMPED CONSTANT DELAY LINE (D1)
-300V VOLTAGE REGULATED
6J6
PULSE CHOPPER WITH CATHODE FOLLOWER FEED-BACK
6AU6
1st AMPLIFIER STAGE
12AT7
2nd & 3rd AMPLIFIER STAGES
6J6
DISCRIMINATOR & DRIVER FOR PULSE FLATTENER
6J6
OUTPUT CATHODE FOLLOWER
(a)
(b)
(c)
(d)
(e)
(f)
(g)

FIG. 7

tional to the energy of the alpha particle causing it. This is true to a high degree of accuracy only in the grid chamber as described in Chapter I.

The second method of pulse shaping is much more satisfactory because it gives a higher signal to noise ratio and gives a pulse shape which is much easier to handle. A circuit was designed for this type of shaping which is shown in Fig. 7.

The pulse is applied to the grid (a) of the cathode follower shaper. Since the cathode follower has an impedance from cathode to ground of about 100 ohms (the cathode follower output impedance is discussed on page 13), the cathode potential will rise to approximately the grid potential. The characteristic impedance of the lumped constant delay line (D_1) is 1000 ohms. The resistance, R_1, is adjusted so that the output impedance from point (b) to ground without the delay line connected is 1000 ohms. When the pulse is applied to the grid (a) of the triode, the voltage (b) across the delay line will rise to half the grid voltage. The signal reflects from the open end of the delay line 22 microseconds later in the same phase as the applied pulse. The voltage at point (B) will, therefore, rise to the full grid voltage 22 microseconds later, after the signal has traversed the delay line and returned. Since the impedance across the input of the delay line is its characteristic impedance, there will be no further reflections. The voltage appearing across R_1, and consequently across R_2 (since the same current flows through both), will be the difference of the voltage at (a) and the voltage at (b). This difference is a square pulse (c), which has a height proportional to the height of the input pulse and a pulse width of twice the delay time of the delay line.

The signal to noise ratio of the signal is increased by this type of shaper, since it attenuates the low frequencies. The frequency response of this shaper for low frequencies (about a tenth the reciprocal of the delay time) is approxi-

mately proportional to the frequency. This attenuation of the low frequencies not only reduces the RMS value of the random noise but also attenuates hum and tube microphonic noise considerably.

For a satisfactory amplification a short square pulse there must be a wide band pass. Attenuation of the low frequencies produces a back kick on the pulse and attenuation of the high frequencies rounds the corners of the pulse. There must, therefore, be a band pass of from about 20 cycles to about a megacycle.

The three amplifier stages which follow the delay line pulse shaper (T_1) have negative feedback from the second stage (T_3) to the first (T_2) and the third stage (T_4) has cathode follower stabilization. This later method of stabilizing gain is discussed on page 12.

It is imperative that the pulse output be perfectly flat on top for the cathode-ray analyzer tube, since the beam must be stationary at the peak of the pulse while it is turned on. Using a flat pulse has also improved the resolution of the biased thyratron-controlled pulse analyzer now in use in the University of California Radiation Laboratory.

To insure that the pulse is flat on top but still preserve its pulse height, a pulse flattener circuit was developed. In this circuit, shown in Fig. 7, the pulse is applied to a cathode follower (T_5), and the pulse voltage is divided by two resistors (R_3 and R_4) in the cathode circuit of the tube. The pulse appearing at point f will be a constant fraction of that appearing at (e). When the pulse rises to its maximum, the condenser, (C_1) will be charged by current through the crystal diode (D_1) to the maximum voltage of the pulse at point (f). This maximum occurs at the leading edge of the pulse. The voltage across C_1 will remain at this potential until it is lowered to zero by current through the diode(D_2) at the trailing edge of the pulse. The polarity of the diodes is such that while the pulse is at its top there is no current through either diode to the condenser (C_1), since point f will be at a lower potential than point g after

the leading edge of the pulse, and point e will be at a higher potential until the trailing edge of the pulse. This circuit, therefore, gives a pulse output which is flat on top and has a pulse height proportional to that of the input pulse.

Since it is usually desirable to analyze pulses above a certain height, a discriminator is incorporated in the circuit to make it possible for the circuit to handle the part of the pulse above a given voltage. This is done merely by applying a negative bias (i) to the cathode follower driving the flattener so that only the part of the pulse above the cut-off potential of the triode is used.

A cathode follower (T_6) stage is used as an output stage for the pulse shaper in order that the output impedance may be low.

CHAPTER IV

Z-Axis Pulse Generator

It is necessary to apply a square pulse to the intensity grid of the cathode ray gun at a time when the pulse on the horizontal deflection plates of the gun is at its maximum. This is done by a triggered pulse generator shown in Fig. 9. The trigger pulse is obtained by delaying the pulse to be analyzed with a delay line (D_1) so that the trigger pulse (d) will have its leading edge at the maximum of the applied pulse. This positive signal is used to fire the thyratron (T_2) of the pulse generator. The thyratron will stay fired until the signal reflects from the open-ended transmission line (L_1) in the plate (e) of the thyratron. This negative pulse extinguishes the thyratron. A square pulse of voltage will, therefore, appear across the resistor (f) in the cathode of the thyratron. This square pulse has a leading edge at the point at which the applied pulse reaches a maximum and a width of 5 microseconds, which is twice the delay time of the delay line.

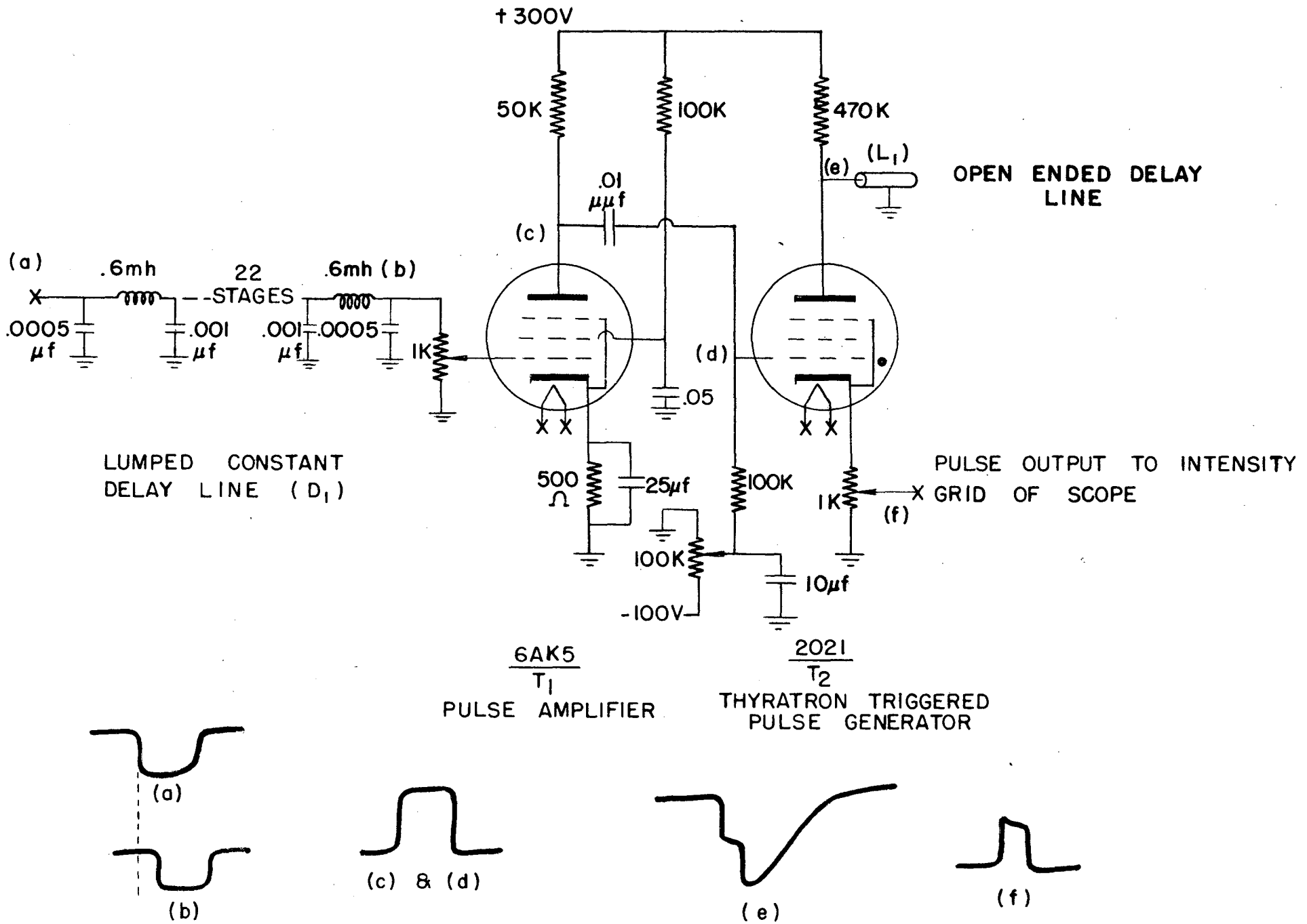

FIG. 9

Z AXIS PULSE GENERATOR

CHAPTER V

The Deflection Amplifier and Bias System

The electron gun is sensitive in deflection sensitivity to the anode voltage. The spot diameter of the electron beam is smaller and the magnetic deflection is less with high anode voltages, so a 3000 volt voltage regulated power supply is used to supply the anode voltage for the electron gun.

At this anode voltage the deflection sensitivity is such that the electron gun requires a horizontal pulse deflection voltage of about 1000 volts. The pulse to be analyzed is amplified to this voltage by the deflection amplifier shown in Fig. 10.

The pulse from the pulse shaper is amplified by a pair of pentode, RC-coupled amplifiers (T_1) and (T_2). These amplifiers have negative feed back to stabalize their gain.

The output amplifier (T_3) is a type 6BG6 beam power pentode. The cathode resistor (R_1) provides cathode follower negative feed back, described in Chapter II, for gain stabilization and increased linearity. The output pulse appears across the resistor (R_2) in the plate circuit of (T_3). The D. C. potential of the plate of (T_3) is divided by the pair of resistors (R_3) and (R_4) so that the D. C. bias of the deflection plate connected to them at (a) (with respect to -150 volts) is proportional to the plate voltage. This plate voltage is regulated at a constant D. C. potential by negative D. C. feed back to the grid of (T_3). This potential may be adjusted to any desired voltage, to give the desired deflection plate bias, by varying the bias control potentiometer (R_6). To reduce the current drain on the 2000 volt power supply for the tube and still provide a low pulse output load resistance (R_2), an additional by-passed plate-dropping resistor (R_5) is inserted in the plate circuit.

The entire pulse output voltage is coupled to the deflection plate by the

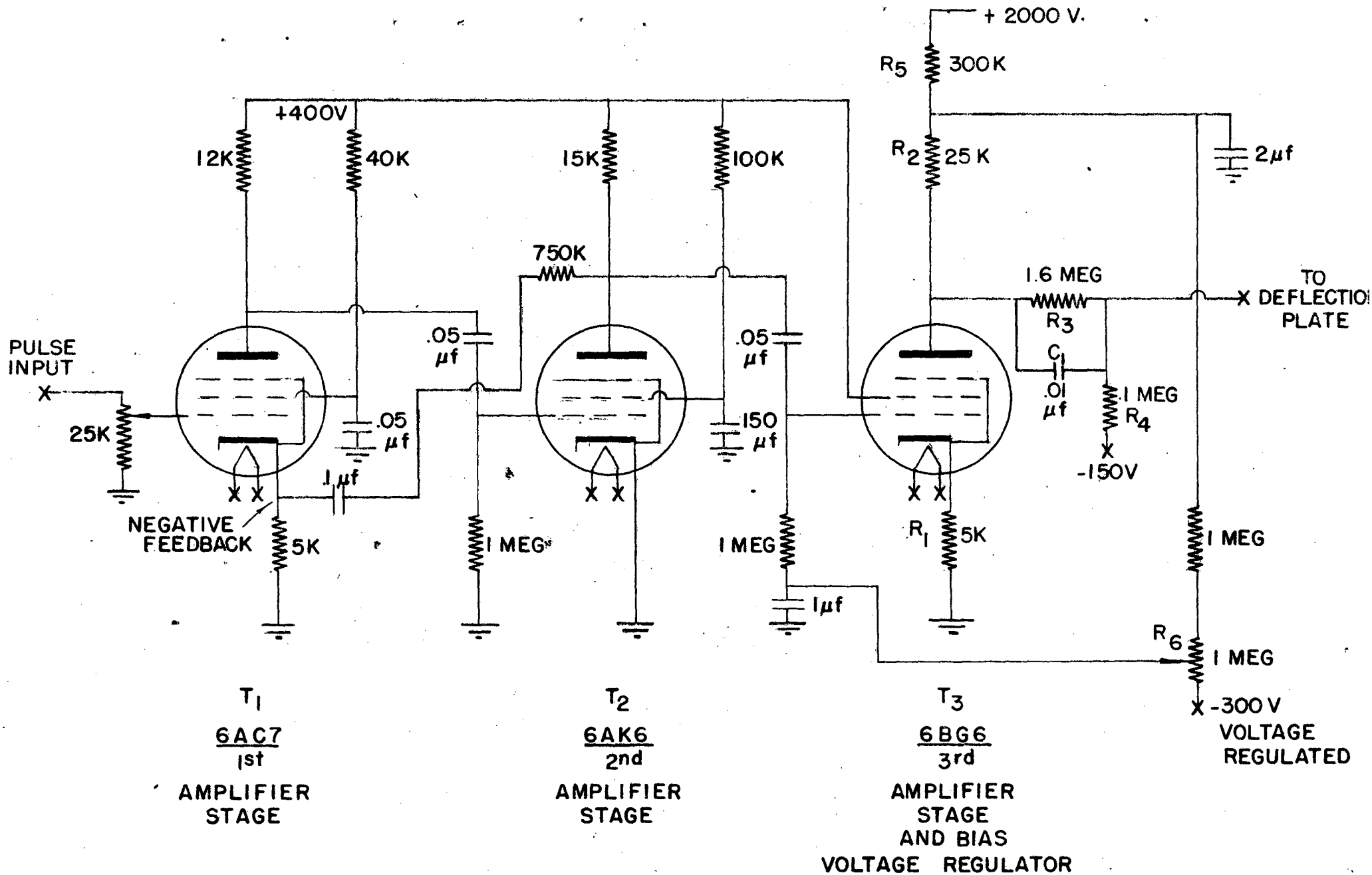

FIG. 10

DEFLECTION AMPLIFIER & BIAS SYSTEM

13178-1

coupling condenser (C_1). By applying the entire pulse voltage and only a portion of the D. C. voltage of the plate of (T_3) to the deflection plate, the pulse on the deflection plate can be made to go negative with respect to ground from a positive D. C. bias. The beam of the cathode ray gun can, therefore, be deflected from its reference point on one side of the screen to the other side by a large pulse. By using this system of bias, both horizontal deflection plates will be at zero potential when the beam is in the center of the screen. This system of bias has less astigmatism of the beam than a system of bias which uses one deflection plate for the applied pulse and the other plate for the D. C. bias to set the reference position of the beam.

CHAPTER VI

The Output Amplifiers

The amplifiers which amplify the current from the collecting anodes of the pulse analyzer tube to a current large enough to operate a mechanical register must pass several rather stringent requirements. It must be simple and require only a few tubes, since fifty such amplifiers must be built. A complex circuit would be expensive and require more frequent repair. The amplifier must amplify pulses reliably of .3 microamps with a pulse width of less than 5 microseconds to a current of several hundred milliamperes of a duration of several milliseconds. This can be done with the amplifier shown in Fig. 11, which consists of only three tubes.

The input (T_a) is a cathode follower which has a low capacity input impedance of about .5 megohms. The shield (S_1) of the input cable inside the grounded shield (S_2) is connected to the cathode of the cathode follower to reduce the effective capacity of the input cable and still provide a method of shielding the input. The other section (T_b) of the input tube (a 6J6 duel triode) is used as a grounded grid, cathode-coupled amplifier. The difference in potential between grid and cathode is provided by changing the cathode potential of the second section (T_b) of the first tube and keeping the grid voltage constant.

This type of amplifier has the advantages of giving a high gain with a high input impedance to the tube. It has the output in phase with the input, and broadens the pulse so that it can be amplified in the next stage with higher gain. The grounded grid stage has electrostatic shielding between the input and the plate, and since the output pulse is negative, a high plate resistor (R_1) may be used, giving a high gain without much loss in pulse height due to output capacity.

The next stage (T_2) is a conventional pentode RC-coupled amplifier using a type 6AU6 with zero grid bias.

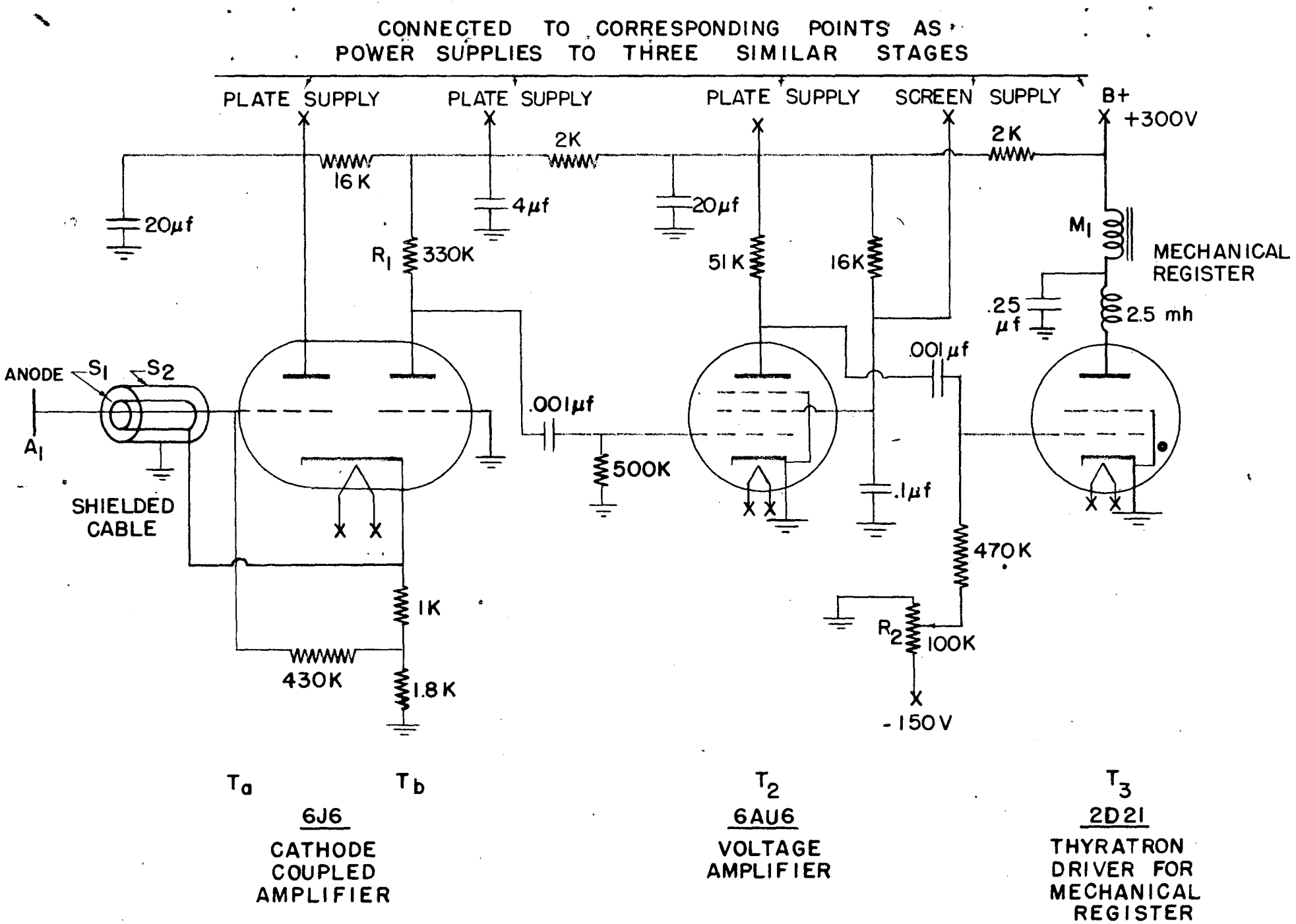

FIG. 11

OUTPUT AMPLIFIER

(ONE STAGE OF A SET OF 4 WITH A COMMON VOLTAGE SUPPLY)

The first two tubes (T_a) (T_b) and (T_2) amplify the .3 microamp pulse of less than 5 microseconds width to a 60 volt pulse of about 10 microseconds width. This is quite a sufficient pulse for firing a thyratron (T_3) such as a 2D21 or 2050 which will operate the mechanical register (M_1). The mechanical register will then count the number of pulses of current on the collecting anode (A_1).

The sensitivity of the amplifier may be changed by changing the bias of the output thyratron (T_3) with the potentiometer (R_2).

The sensitivity is adjusted so that the mechanical register will trip if more than half of the beam is striking the collector anode to which it is connected. By doing this, the definition of the pulse analyzer may be increased, since, if the beam strikes the edge of an anode, it will trip the register of the anode that most of the beam is striking.

CHAPTER VII

Construction of the Tube

The physical dimensions of the pulse analyzer tube are shown in Fig. 1. The chamber (1) is made of brass with a lucite end plate (2). Fuse wire gaskets are used for all metal joints, and a plastic gasket is used for the end plate.

A standard 11 pin female socket is mounted on a plate on the small end of the chamber. The wires are fed through this plate so that a standard cathode ray tube electron gun can be mounted in the socket without any change in base pin connections.

The electron gun from a 3GP1 or 5LP1 cathode ray tube may be used. The glass envelope of the electron gun is cracked with a hot wire and broken off near the base of the tube, leaving the electron gun supported on the tube base.

At first the guns were taken apart and the cathode recoated with a commercial oxide cathode coating. This proved to be unreliable in giving a well-focused electron beam. It was found that the cathode of the electron gun could be reactivated without recoating it by heating it in about 10^{-4}mm Hg of hydrogen. This gave quite a satisfactory focus. The cathode could be exposed to air and reactivated several times.

The electron gun will operate satisfactorily at a pressure of 10^{-3}mm Hg or less. To provide this vacuum, an oil diffusion pump with a pumping speed of 100 liters per minute is used. The tube is usually operated at a pressure of approximately 10^{-5}mm Hg.

A thermocouple ion gage is used to measure the chamber pressure above 10^{-3}mm and an electronic triode ion gage is used for pressures below this value.

The lucite end plate has a 3-inch fluorescent screen and a series of 50 anodes mounted on it. The beam can be focused visually on the fluorescent screen. A 3-inch cathode ray tube is connected in parallel with the pulse analyzer tube

to use as a pilot for setting the position of the beam in the master tube.

The anodes are mounted as shown in Fig. 12. They are staggered to reduce the capacity between adjacent plates and to eliminate the gap in the horizontal direction between adjacent anodes. The anodes are made of sheet copper and are coated with aquadag to reduce secondary emission.

The anodes are soldered to brass bolts which extend through the lucite end plate and are sealed in with sealing wax.

The chamber is mounted on a steel framework and is shielded magnetically by a sheet iron housing.

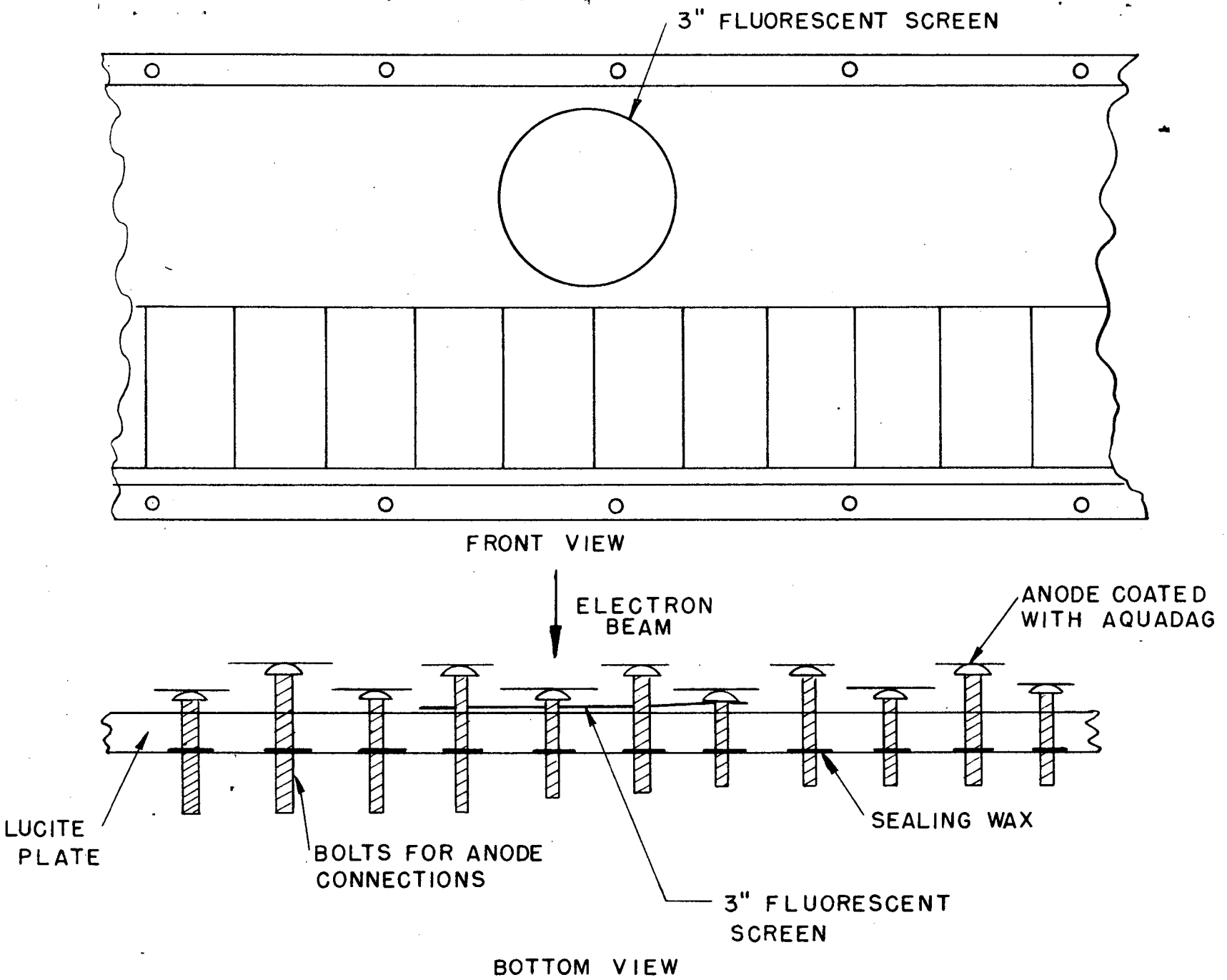

FIG. 12
ANODE ARRANGEMENT

CHAPTER VIII

Results

The preamplifier and shaping circuit were tested with the biased thyratron type pulse analyzer in present use at the Radiation Laboratory. The preamplifier described in Chapter II was connected to a two-electrode ionization chamber described in Chapter I, with a standard sample inserted. The output of the preamplifier was connected to the pulse shaper, which consisted of the delay line pulse chopper, discriminator, and pulse flattener described in Chapter III. The output of this was in turn connected to the biased thyratron pulse analyzer. The resolution of the peaks in the plot of number of counts vs. pulse height was quite satisfactory, indicating that the preamplifier and shaper were working satisfactorily.

A pulse consisting of a pulse chopper and flattener as described in Chapter III was constructed for permanent use with the biased thyratron pulse analyzer. This shaper improved the resolution and stability of the pulse analyzer considerably.

The remainder of the circuit preceeding the cathode ray tube, including the power supply, deflection systems, Z-axis pulse generator, and pilot oscilloscope, was tested by connecting the output of the pulse shaper, as described above, to the deflection amplifier and Z-axis pulse generator instead of the biased thyratron pulse analyzer. Spots of light corresponding in position to the energy of the alpha particles appeared on the screen of the pilot cathode ray tube and on a tube inserted in the socket intended for the pulse analyzer tube.

The pulse analyzer tube with its associated output amplifiers and registers was tested by applying test pulses of constant height to the input of the pulse shaper, which was in turn connected to the deflection system and Z-axis pulse generator as described above. The sensitivity of the output amplifiers was

adjusted so that the mechanical registers would record a pulse if more than half of the beam struck a plate. The beam had excellent definition. By varying the pulse height applied to the pulse analyzer, the registers would trip at a position corresponding to the pulse height. If the beam struck the edge of an anode, it would trip either one register or the adjacent one and never both or neither.

The remainder of the output amplifiers are now being constructed.

A tube is being designed with a smaller glass envelope which can be evacuated and sealed off. This should make a more compact instrument and reduce the vacuum system problems considerably.

The pulse analyzer seems to work satisfactorily. The definition and stability seem to be quite good. At present the pulse repetition rate is limited to about 35 microsecond separation if the adjacent pulses are of different height so they operate different registers. (A single mechanical register has a repetition rate of only about 120 pulses per second.) The instrument could be made to have a pulse repetition rate limited only by the ionization chamber and mechanical register speeds.

CHAPTER IX

Further Applications

A system has been constructed, as shown in Fig. 13. In this system an ordinary cathode ray tube (a) is used instead of the pulse analyzer tube, and photo-tubes (b) and (c) are used, instead of anodes, to detect the position of the beam, when it is turned on. This system has only two channels and is used for short half-life determination.

The position at which the pulses are detected is adjusted by varying the position of the slots (d) and (e) in front of the phototubes (b) and (c). The width of the channel can be adjusted by varying the width of the slots (d) and (e). An RF signal is applied to the vertical deflection plates to spread the spot in the vertical direction so that it may be detected by either tube.

The photo-tubes used are electron multiplier tubes, type 931 A. These tubes give a voltage pulse output of approximately 5 volts when a pulse of light appears on the fluorescent screen in front of it.

For measuring short half lives of certain isotopes one slot (d) is set at the energy of an isotope emitting an alpha particle, and the other slot (e) is set at the alpha energy of the daughter product. An isotope will decay by emitting an alpha particle to another isotope, which will emit another alpha particle. The time between these two alpha particles is a measure of the half life of the second isotope.

The pulse analyzer tube may be used as a device for measuring the time between these two pulses. A linear-triggered sweep may be tripped by the first alpha particle pulse so that the beam of the cathode ray gun will sweep at a constant rate from one end of the series of anodes to the other. The beam, which is normally off, can then be turned on by the second alpha particle pulse. The beam will then be turned on on an anode corresponding to the time between the

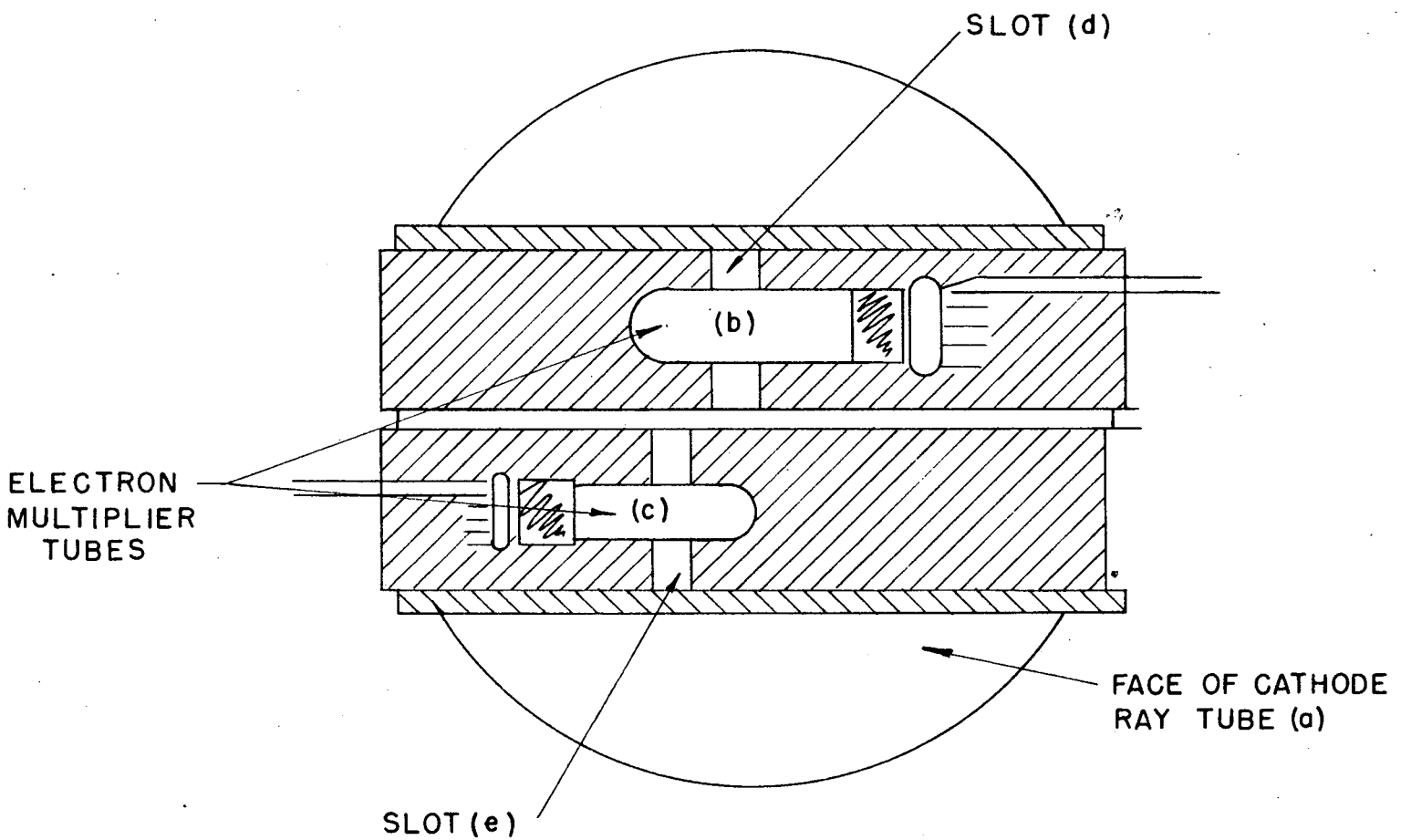

FIG. 13

PHOTOELECTRIC CELL SYSTEM

13174-1

the two pulses. A plot of the counts appearing on the mechanical registers connected to these anodes will give a plot of the number of counts vs. the time between pulses that is an exponential. This corresponds to the exponential decay of the second alpha emitter. From this curve the half life of this isotope can be calculated.

The pulse analyzer tube may have further application in the field of pulse modulation and electronic computors.

The author wishes to express his appreciation of the help given him in developing this instrument by Mr. A. Ghiorso, Mr. H. P. Robinson and other members of the University of California Radiation Laboratory.

The work described in this paper was performed under the auspices of the Atomic Energy Commission.

LMB/12-10-48
Info. Div.

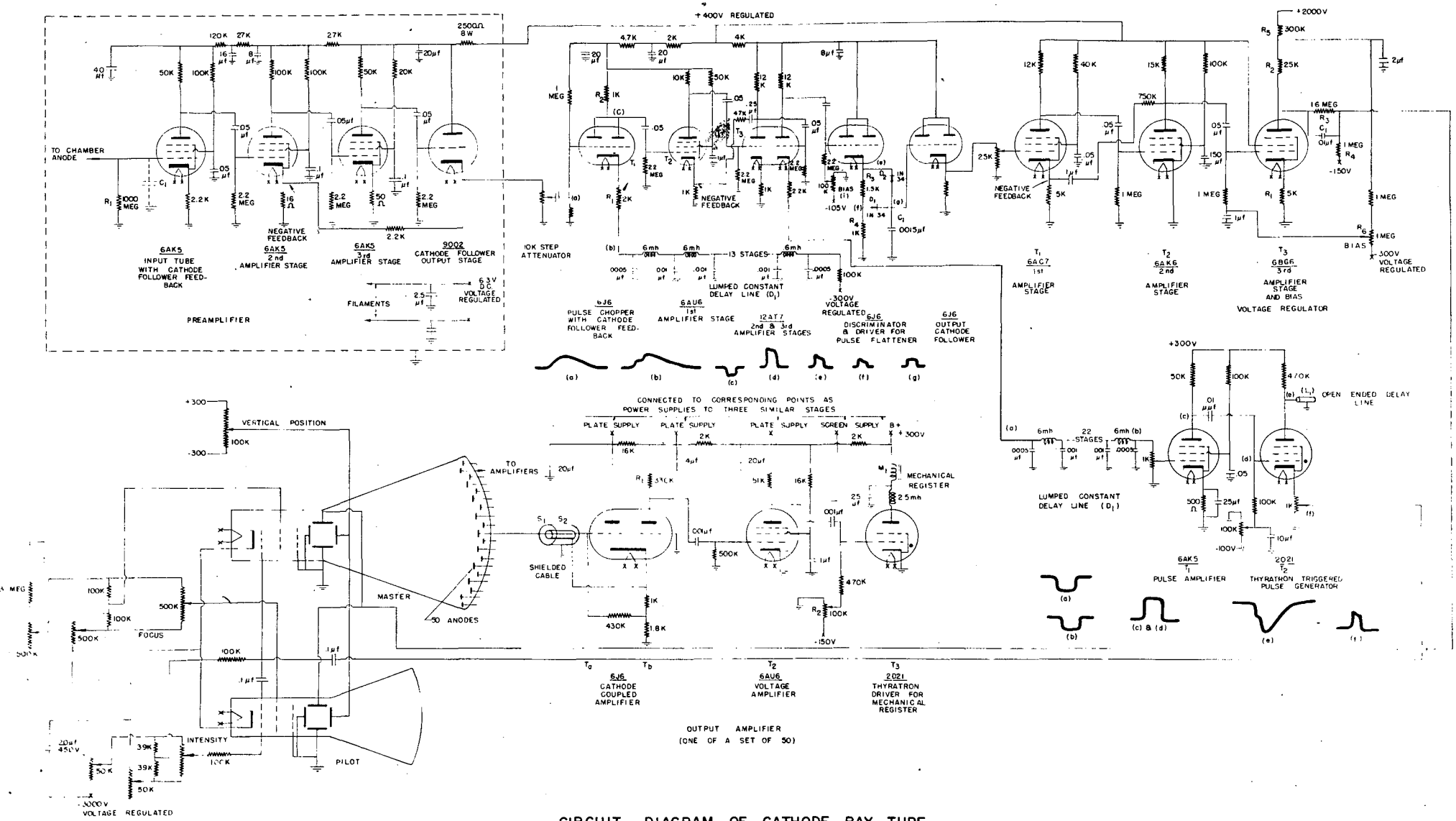

CIRCUIT DIAGRAM OF CATHODE RAY TUBE
PULSE HEIGHT DISTRIBUTION ANALYZER

1319

Circuit for pulse analyzer with four mechanical registers for testing the operation of the tube.

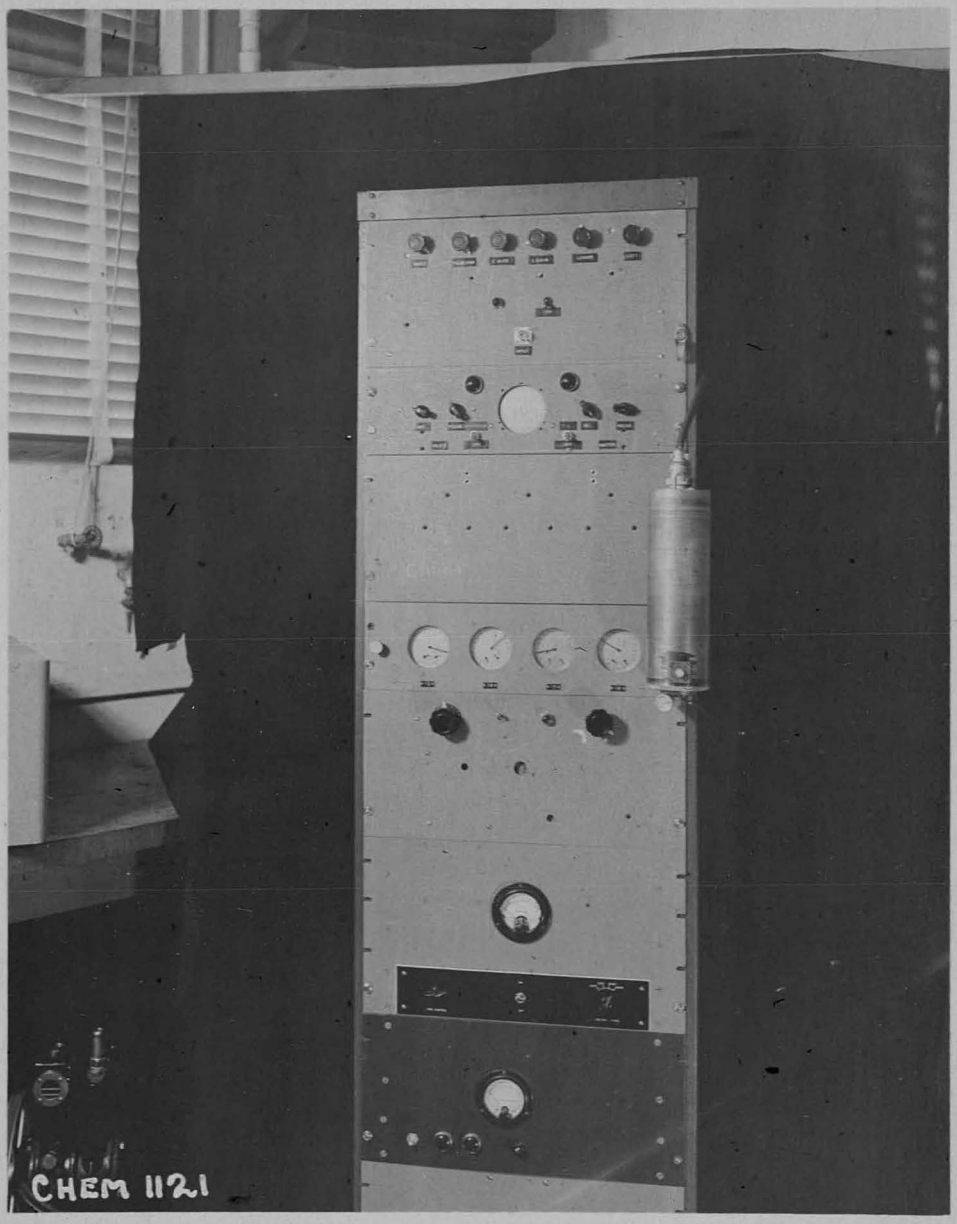

OZ - 293

Pulse analyzer tube and vacuum system

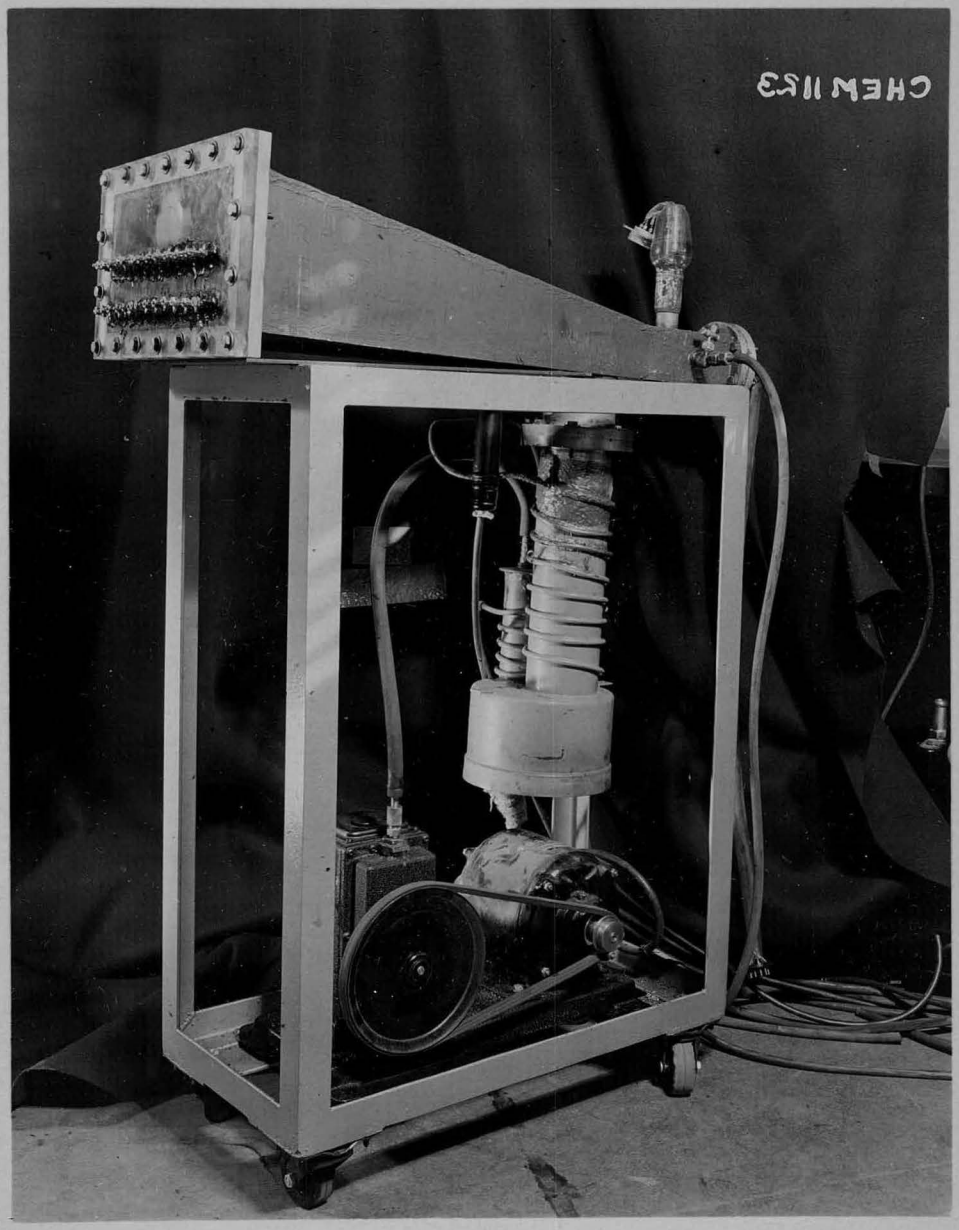
CHEM 113

Close up of anode structure and front panel of pulse analyzer tube.

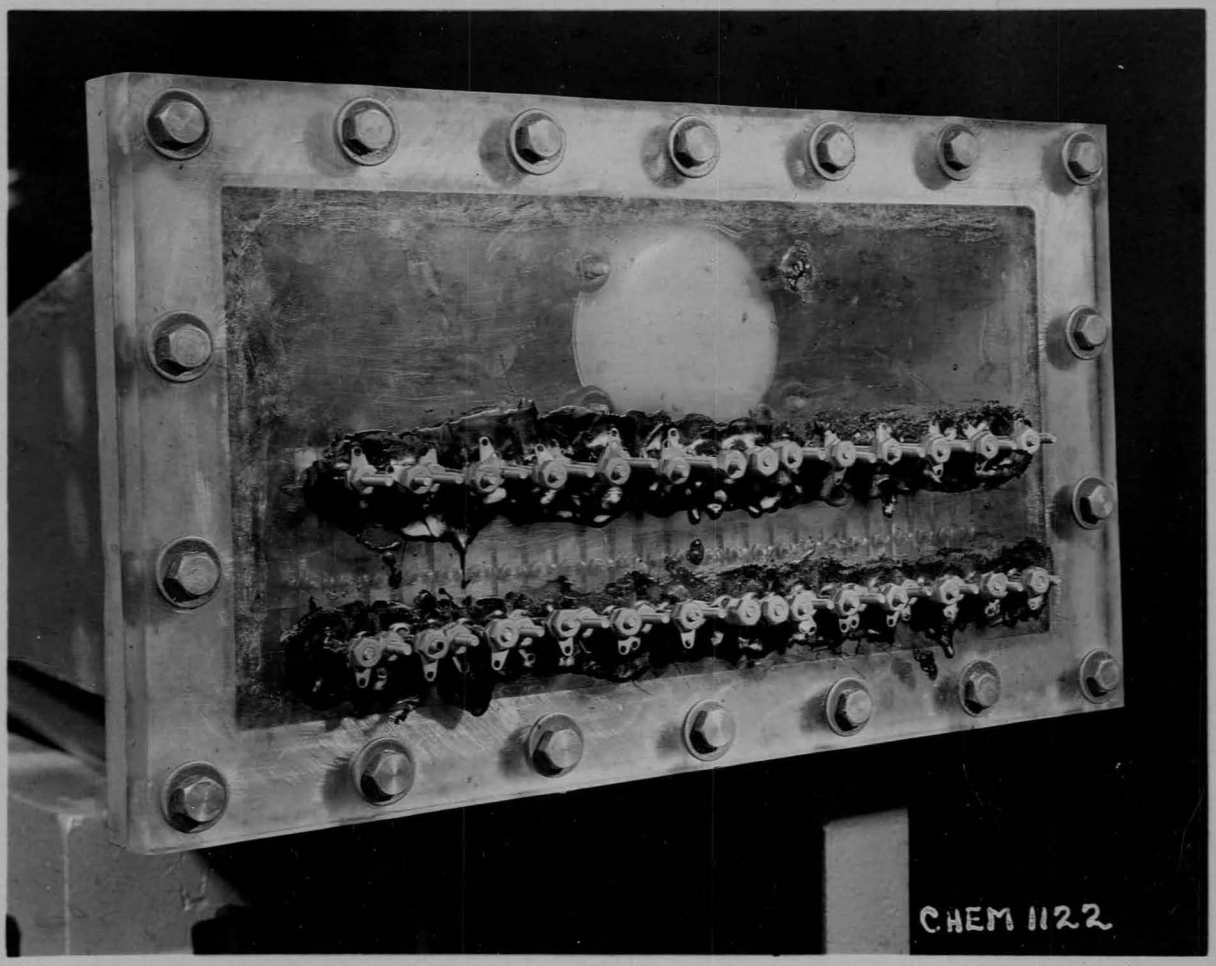

OZ - 294