UCRL 256
Cy. 2

UNIVERSITY OF CALIFORNIA

Radiation Laboratory

TWO-WEEK LOAN COPY

This is a Library Circulating Copy which may be borrowed for two weeks. For a personal retention copy, call Tech. Info. Division, Ext. 5545

BERKELEY, CALIFORNIA

DISCLAIMER

This document was prepared as an account of work sponsored by the United States Government. While this document is believed to contain correct information, neither the United States Government nor any agency thereof, nor the Regents of the University of California, nor any of their employees, makes any warranty, express or implied, or assumes any legal responsibility for the accuracy, completeness, or usefulness of any information, apparatus, product, or process disclosed, or represents that its use would not infringe privately owned rights. Reference herein to any specific commercial product, process, or service by its trade name, trademark, manufacturer, or otherwise, does not necessarily constitute or imply its endorsement, recommendation, or favoring by the United States Government or any agency thereof, or the Regents of the University of California. The views and opinions of authors expressed herein do not necessarily state or reflect those of the United States Government or any agency thereof or the Regents of the University of California.

UCRL 256
Administrative-General

Copy 2

UNIVERSITY OF CALIFORNIA

Radiation Laboratory

Contract No. W-7405-eng-48

PREPARATION OF CALCIUM GLYCOLATE-1-C^{14} AND CALCIUM GLYCOLATE-2-C^{14}

D. M. Hughes and B. M. Tolbert

December 23, 1948

Berkeley, California

PREPARATION OF CALCIUM GLYCOLATE-1-C^{14} AND CALCIUM GLYCOLATE-2-C^{14}

By

D. M. Hughes and B. M. Tolbert

Radiation Laboratory and Department of Chemistry,
University of California, Berkeley, California*

Dec. 23, 1948

ABSTRACT

Calcium glycolate-1-C^{14} and calcium glycolate-2-C^{14} have been prepared on a 15 mmole scale in 60-65% yield from the corresponding sodium acetates by the chlorination of anhydrous acetic acid followed by hydrolysis of the chloroacetic acid and the precipitation of the calcium salt of the resulting glycolic acid.

---

* This paper is based on work performed under Contract. No. W-7405-Eng-48 with the Atomic Energy Commission in connection with the Radiation Laboratory, University of California, Berkeley, California.

PREPARATION OF CALCIUM GLYCOLATE-1-C^{14} AND CALCIUM GLYCOLATE-2-C^{14}

By

D. M. Hughes and B. M. Tolbert

Radiation Laboratory and Department of Chemistry,
University of California, Berkeley, California*

Glycolic acid, an important plant and animal biochemical intermediate, has been prepared labeled with C^{14} in the one-position and in the two-position in good yield on a 15 mmole scale. Sodium acetate labeled in either the one- (1) (2) or two-position (2) (3) was used as the starting material:

$$CH_3CO_2Na + HCl_{(g)} \longrightarrow CH_3CO_2H + NaCl$$

$$CH_3CO_2H + Cl \xrightarrow[P_4,\ I_2]{\text{acetyl chloride}} ClCH_2CO_2H + HCl$$

$$2\ ClCH_2CO_2H + CaCO_3 \longrightarrow (HOCH_2CO_2)_2Ca + CaCl_2 + CO_2$$

None of the intermediate products were isolated, thus eliminating losses in purification.

---

* This paper is based on work performed under Contract No. W-7405-Eng-48 with the Atomic Energy Commission in connection with the Radiation Laboratory, University of California, Berkeley, California.

(1) W. G. Dauben, J. C. Reid and P. E. Yankwich, Anal. Chem., 19, 828 (1947).

(2) "Isotopic Carbon" by Calvin, Heidelberger, Reid, Tolbert and Yankwich, John Wiley and Sons, Inc., in press.

(3) B. M. Tolbert, J. Biol. Chem., 173, 205 (1948).

In order to chlorinate acetic acid it is important that it be very dry. A novel procedure was developed for quantitatively converting sodium acetate to free acetic acid by treating dry sodium acetate with dry hydrogen chloride in a gas-solid reaction vessel. (See Fig. I). By treating this product which contained a possible 1% water with acetyl chloride, acetic acid of sufficient dryness to give a good yield of chloroacetic acid was prepared.

The purity of the calcium glycolate was checked by three methods. In the first, the calcium glycolate was recrystallized from water and the specific activity remeasured. It was found that this activity did not change, thus confirming the gross purity of the product. A paper chromatographic separation of the product revealed only one radioactive compound which confirmed the radioactive purity of the salt. (NOTE: The method would not have detected acetic acid.) And last, an elementary analysis agreed well with the calculated values. It was noted, however, that sometimes the dihydrate precipitated and sometimes the anhydrous calcium glycolate, depending on which reaction started first.

EXPERIMENTAL

Anhydrous acetic acid is prepared by treating 1.0 g. (12 mmoles) of anhydrous sodium acetate with 36 mmoles of anhydrous hydrogen chloride. The sodium acetate is placed in the removable bottom of a gas-solid reactor (Fig. I) and the apparatus reassembled (*) and attached to the

---

(*) The use of Silicone high vacuum type stopcock grease (Dow-Corning Co., Midland, Michigan) is recommended here and is necessary on the reaction vessel described later.

high vacuum manifold. The last traces of water are removed by evacuation to a pressure of 5 μ. Tank hydrogen chloride is dried by shaking in a similar gas-solid reactor with phosphorus pentoxide. The hydrogen chloride is then distilled into a liquid nitrogen-cooled trap (Fig. II-A) and the non-condensible gases pumped off. The hydrogen chloride is then transferred to a 5 l. storage bulb; approximately 35 mmoles of this hydrogen chloride is admitted to the gas-solid reactor by carefully opening the stopcock of the reactor and measuring a pressure drop of 5" in the 5 l. bulb.

The gas-solid reactor is then removed from the vacuum manifold and the finger containing the solid is heated carefully over a Bunsen burner. The apparatus is held at such an angle that the acetic acid formed will distill into the bulb. The cake of solid is loosened by gentle shaking, and the heating continued until it becomes powdery The apparatus is allowed to cool and is then connected to the vacuum manifold and the acetic acid distilled <u>in vacuo</u> into a liquid nitrogen-cooled trap (Fig.II-A) The trap is warmed with a Dry Ice-isopropyl alcohol bath and most of the excess hydrogen chloride pumped off.

The acetic acid is then back distilled into a vessel containing 0.40 ml. freshly distilled acetyl chloride. With the stopcock to this vessel and that of the pressure gauge open to the manifold, this mixture is allowed to come to room temperature slowly, then is heated to 45° by a warm water bath. Any excess pressure due to hydrogen chloride is released by briefly opening stopcock B and freezing the gases into trap A. When the reaction of the acetyl chloride with any traces of water in the acetic acid is completed, all the acetyl chloride-acetic acid mixture is transferred to trap A and then back distilled into an evacuated

chlorination apparatus containing 0.4 g. red phosphorus and 0.2 g. of iodine as catalysts. (Fig. III)

The apparatus and its frozen contents are removed from the vacuum line and placed in a hood. The lower condenser is cooled with water and the upper condenser with Dry Ice-isopropyl alcohol, and the upper exit fitted with a drying tube and opened. The reaction mixture is heated with a steam bath for 2-3 minutes, then tank chlorine, dried over phosphorus pentoxide, is admitted through the bubbler at a rate of about 5 cc. chlorine per minute. The reaction is allowed to proceed for about 2 hours. A dark reddish solid forming in the condenser at the end of about 2 hours is not uncommon.

The chlorine and the steam bath are turned off and removed. The Dry Ice-isopropyl alcohol in the condenser is then removed, and the excess chlorine permitted to escape. The exit stopcock is closed, and the reaction mixture frozen in liquid nitrogen. A vacuum is thus created, and most of the material distills into the lower portion of the tube. The apparatus is then attached to the vacuum manifold, and with the Y of the reaction tube immersed in liquid nitrogen, the rest of the material in the condenser is distilled down.

The liquid nitrogen bath is removed, the condenser disconnected and 2-3 ml. water is cautiously added to the still frozen mixture.

The material is transferred to a 60 cc. flask using a total of 20 ml. of water. The flask is then fitted with a reflux condenser and calcium carbonate is added slowly through the condenser until no more gas is evolved. An excess of 2 g. of calcium carbonate is then added making a total of about 4-5 g. The flask is placed on a steam bath for about 2-1/2 days.

The flask contents are then filtered hot; no wash water is used at this time. The filtrate is placed in a refrigerator for 24 hours or longer, if necessary. The calcium carbonate solid is washed thoroughly with hot water and the wash water saved for a second crop.

The calcium glycolate will start to precipitate after 2-3 hours. After 24 hours it is filtered on a weighed sintered glass funnel, washed twice with absolute alcohol, dried *in vacuo* and weighed. The filtrate is combined with the wash water from the calcium carbonate, concentrated to 5-7 ml. and placed in the refrigerator as before. This may be slower to crystallize, and it may be necessary to seed it with a crystal from the first crop.

The yield data for the two preparations are listed in Tables I and II.

TABLE I

Preparation of Calcium Glycolate-1-C^{14}

		M.equiv.	Wt.,mg.	Sp. Activity
STARTING MATERIALS:	Sodium acetate	12.40	1001.5	0
	Sodium acetate	0.94	77.0	6.5 μc/mg
	Acetyl chloride	5.65	443.0	0
PRODUCT:	1st crop [·2 H_2O]	8.69	982.2	0.24 μc/mg*
	2nd crop [·2 H_2O]	3.65	411.8	0.21 μc/mg

* - Theoretical = 0.23 μc/mg

Yield: 65.0% based on acetate used to begin synthesis or 61.7% based on $^{*}CO_2$. The yield of sodium acetate-1-C^{14} was 95% based on $^{*}CO_2$.

TABLE II

Preparation of Calcium Glycolate-2-C^{14}

		M. equiv.	Wt.,mg.	Sp. Activity
STARTING MATERIALS:	Sodium acetate	12.40	1000.3	0
	Sodium acetate	1.35	110.5	4.88 μc/mg
	Acetyl chloride	5.65	443.0	0
PRODUCT:	1st crop [0 H_2O]	8.70	828.4	0.30 μc/mg*
	2nd crop [2 H_2O]	3.05	344.7	0.23 μc/mg

* - Theoretical = 0.29 μc/mg

Yield: 60.5% based on acetate used to begin synthesis or 42.5% based on $\overset{*}{C}O_2$. The yield of sodium acetate-2-C^{14} was 70% based on $\overset{*}{C}O_2$.

ACKNOWLEDGMENTS

We wish to express our thanks to Prof. M. Calvin for his aid and encouragement in this work and to Mr. C. Koch for the microanalysis.

SUMMARY

Calcium glycolate-1-C^{14} and calcium glycolate-2-C^{14} have been prepared on a 15 mmole scale in 60-65% yield from the corresponding sodium acetates by the chlorination of anhydrous acetic acid followed by hydrolysis of the chloroacetic acid and the precipitation of the calcium salt of the resulting glycolic acid.

The work described in this paper was sponsored by the Atomic Energy Commission.

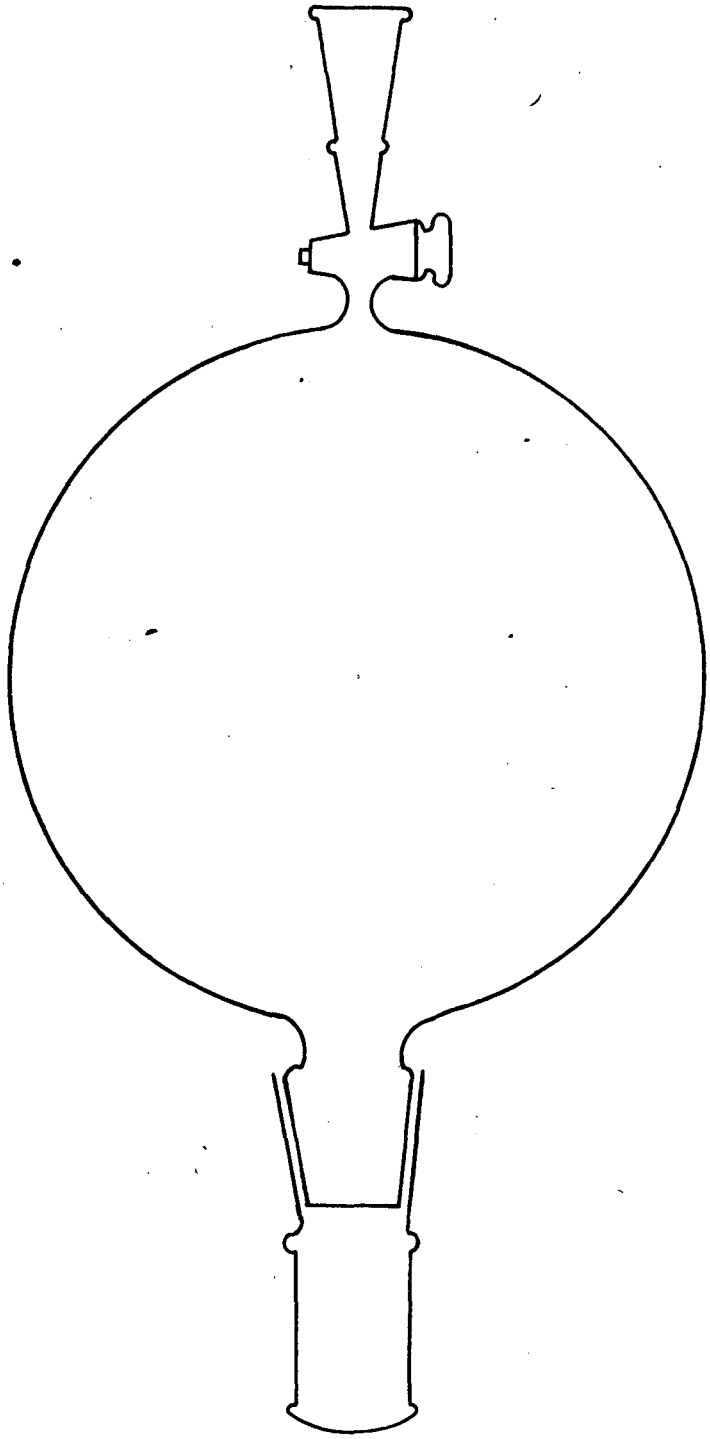

GAS SOLID REACTOR
(CAPACITY = 2 L)

FIG 1

13220-1

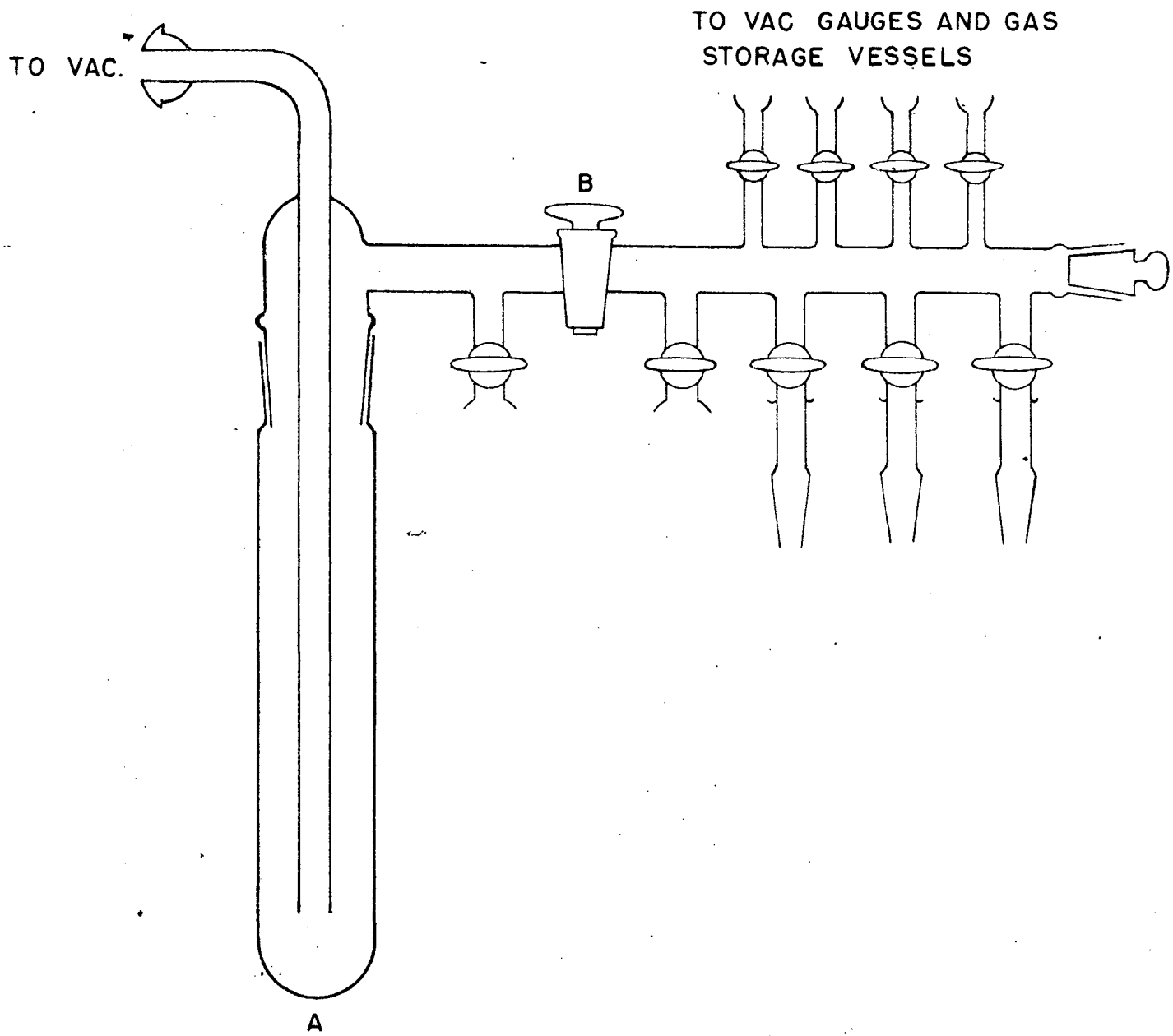

FIG. 2

VACUUM MANIFOLD FOR ORGANIC SYNTHESIS

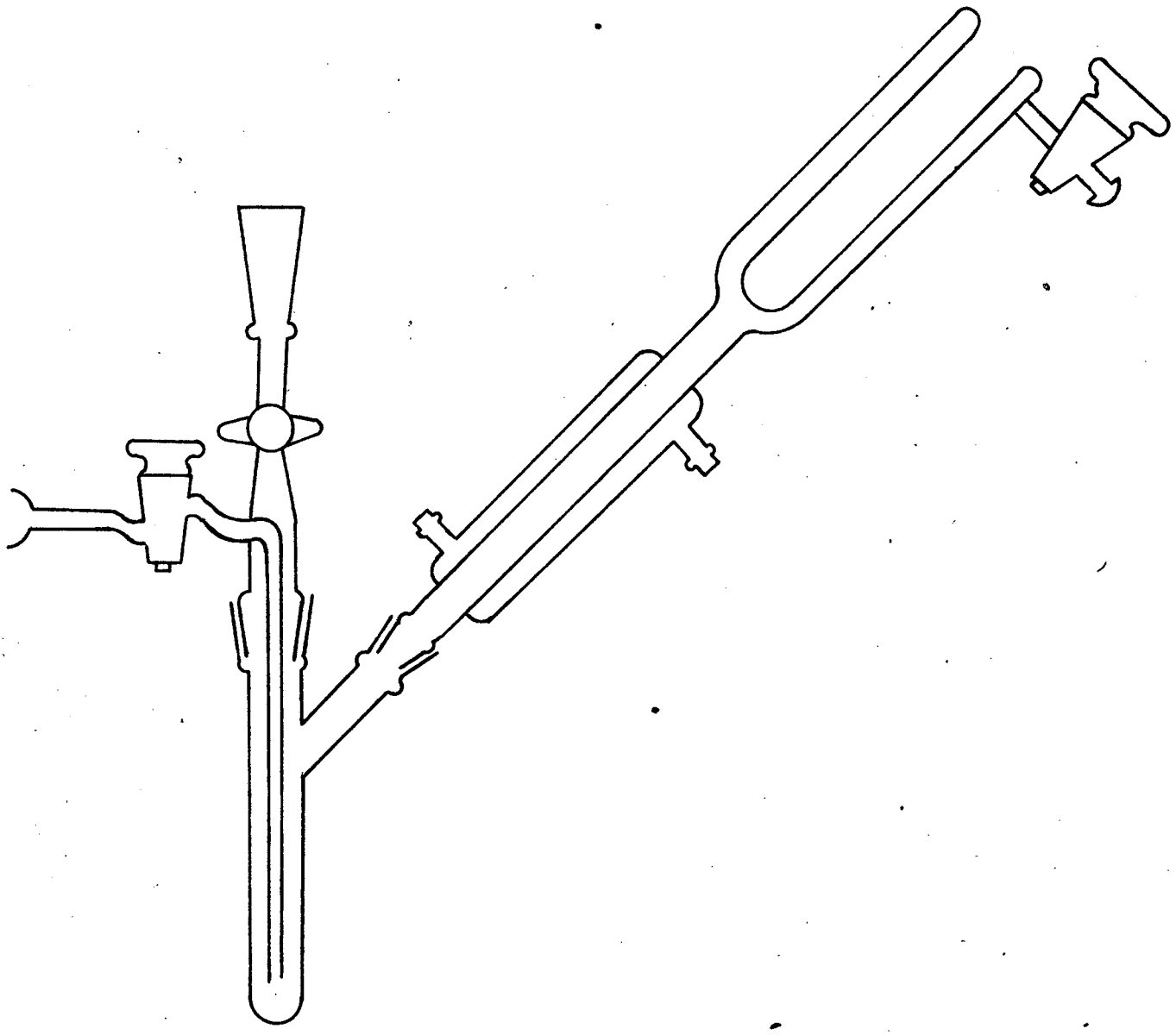

CHLORINATION APPARATUS

FIG. 3

13222-1