UCRL-2682

UNIVERSITY OF CALIFORNIA

Radiation Laboratory

Contract No. W-7405-eng-48

INTERMEDIATES OF PHOTOSYNTHESIS: ISOLATION AND DEGRADATION METHODS[1]

A.A. Benson and M. Calvin

August, 1954

Berkeley, California

INTERMEDIATES OF PHOTOSYNTHESIS: ISOLATION AND DEGRADATION METHODS[1]

A. A. Benson and M. Calvin

Radiation Laboratory and Department of Chemistry
University of California
Berkeley, California

In defining the path of carbon in photosynthesis a variety of new techniques were developed which have wide application in metabolism studies. The primary attribute of the tracer method, its ability to discriminate between the first few intermediates of a reaction sequence and the host of compounds in the organism, simplified the problem of isolation and identification of the intermediates of carbon dioxide fixation of the plant's numerous components, only a few become labeled as the label of carbon dioxide makes its way through the sequence of reactions leading to uniform distribution in the plant.

When a plant engaged in steady-state photosynthesis at constant carbon dioxide pressure is given a negligible amount of high specific activity $C^{14}O_2$, the rate of photosynthesis can be measured by a linear accumulation of radioactivity. Such a C^{14} fixation curve is a summation of a large number of radioactivity appearance curves for the intermediates and products. The curve for each compound, in turn, is made up of a summation of the rates of accumulation of label in each of its several carbon atoms. The observation of these rates has contributed to an understanding of the sequential relationships of carbon dioxide fixation and reduction.

In the very shortest periods of steady state $C^{14}O_2$ fixation the major product was seen to be phosphoglyceric acid.[2] Such a primary carboxylation product has an "appearance curve" with an initial finite slope while all subsequent

intermediates should have initial slopes of zero. Such curves have been obtained for photosynthesis by the green alga, Scenedesmus,[3] and are shown in Figure 1. Phosphoglycerate and malate are direct carboxylation products while other compounds have negligible slopes at the origin.

Each of these "radioactivity appearance curves" is made up of individual curves for label in each carbon atom of the compound. It is from these particular radioactive appearance rate data that one may deduce the path of carbon in photosynthesis.

Securing such data requires several steps. One must be able to separate the labeled compounds and determine their total radioactivity. One must choose those which appear to be the major intermediates involved and identify them. This done, a method of chemical or biological degradation must be developed whereby the label of each carbon atom may be measured either as a one-carbon compound or its derivative, like barium carbonate or formaldimedon, or as the differences in label between that in known groups of carbon atoms. Some of the techniques applied in carrying out these steps with photosynthetic intermediates are described in the succeeding sections.

SEPARATION OF LABELED COMPOUNDS

Many methods are available for fractionation of plant constituents. Since none are universally applicable the method chosen is dependent upon the type of compounds investigated and the standards of purity required. The classical methods for fractionation of amino acids or the sugar phosphates by their solubility properties are practical for large-scale separation when co-precipitated impurities can be tolerated. These methods are not applicable, however, when separating radioactive components of widely varying radioactivities and specific activities. A negligible fraction of co-crystallized or adsorbed impurity of high specific radioactivity could easily lead to an erroneous identification. Methods must be chosen, therefore, which will be free of such limitation.

Paper chromatography is such a method and has admirably complimented the tracer technique.

Paper chromatography is a separation based largely upon solvent partition[4] and as such is remarkably free of those difficulties which plague the analyst, absorption, cocrystallization and other interactions between substance and impurity. The partition coefficient of a substance is independent of concentration over a large range and not seriously influenced by moderate concentrations of impurities. By choosing suitable solvents a wide group of compounds may readily be separated.

It has proved valuable to use chromatographing solvent systems which give optimum separation of the majority of soluble compounds becoming labeled during photosynthesis in $C^{14}O_2$. Most plant extracts are near pH 6 and hence most of the acidic compounds are dissociated. Phenol-water has been chosen for the first dimension because it gives a remarkably good separation of amino acids, carboxylic acids, sugars and phosphate esters and does not change the pH of the compounds applied to the paper. In order to achieve a different order of separation of these compounds, the second solvent contains acid capable of "swamping"[5] or acidifying the carbohydrate and phosphate salts, thereby radically changing their solubility characteristics. Bases, being largely in the form of their salts, will become more water soluble, and their R_f values will, therefore, be reduced. Acids will become less soluble in the water phase, their R_f values increasing. The acidic compounds, therefore, move relatively farther in the acid solvent than do the neutral substances. Basic substances move much less at high pH than at pH 6. Position on the chromatogram, then, tells much of the acid or base character of a compound. A typical radiogram of such a paper chromatogram is shown in Figure 2.

SEQUENCE OF INTERMEDIATES IN PHOTOSYNTHESIS

Photosynthetic incorporation of carbon dioxide has been found to follow the pattern outlined in Figure 3.[6] The kinetics of the appearance of C^{14} in the various carbons of this sequence is consistent with the available degradation data as well as with our knowledge of the enzymatic equilibria involved. The major synthetic pathway, leading to sucrose in most plants, follows the Embden-Meyerhof sequence to the condensation reaction by which sucrose phosphate is formed and from which free sucrose is liberated as the first free sugar. The cyclic system serves for the regeneration of the carbon dioxide acceptor and involves equilibration of the ketose phosphates, fructose-6-phosphate, sedoheptulose-7-phosphate and ribulose-5-phosphate by transketolase. This system was devised on the basis of the isolation, identification and degradation of the compounds which become labeled when plants are fed labeled CO_2. The relationships of the labeled atoms to a number of externally controllable variables such as light and CO_2 pressure[7,8] made possible a more or less definitive specification of the path of carbon as shown in Figure 3. Each of the individual steps therein given is well on its way toward *in vitro* demonstration.

Changes in Reservoir Sizes upon Changing CO_2 Pressure

The carbon dioxide acceptor which accumulates when the carbon dioxide pressure is reduced appears to be ribulose diphosphate. Reservoir sizes were determined by counting each compound on two-dimensional paper chromatograms prepared from extracts of samples of labeled algae taken at five-second intervals while the carbon dioxide pressure was being reduced. The accumulation is demonstrated[7,8] in the curves of Figure 4.

Immediate decrease in PGA concentration results from the sudden drop in carbon dioxide pressure. The first compound to increase in concentration is ribulose diphosphate. It is seen that pentose monophosphates and triose

phosphate rise later. These results suggest that ribulose diphosphate is the carbon dioxide acceptor and are verified by carboxylation of ribulose diphosphate with $C^{14}O_2$ in the presence of a crude cell-free plant enzyme preparation[9] to give carboxyl-labeled PGA.

DISTRIBUTION OF C^{14} IN PHOTOSYNTHETIC INTERMEDIATES

The earliest PGA is carboxyl-labeled and it apparently is the product of the reaction:[6]

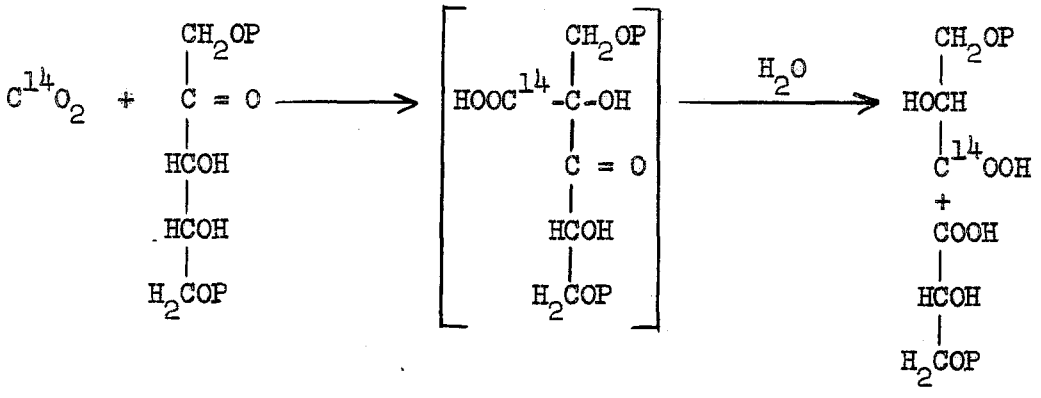

In one to three minutes, depending upon the plant used, PGA becomes uniformly labeled. The α and β carbon atoms accumulate C^{14} at practically identical rates. The distribution of label in the hexoses, Table I, reflects this in the identical increase of C^{14} in C-2,5 and in C-1,6. The explanation for such equality is seen in the scheme of Figure 3 where F-6-P serves as substrate for the production of the "C_2 acceptor." C-1,2 of fructose ultimately becomes the α and β carbons of PGA as do C-3,4. The observation of uniformly labeled glycolic acid in even the shortest photosynthesis periods[10] suggested that it may be related to the symmetrically labeled CO_2 acceptor.

The distribution of label in ribulose, sedoheptulose and fructose phosphates is given in Table II.[6] These data are consistent with transketolase equilibration and led to the choice of the hexose as the only probable source of the C_4 moiety required for the formation of sedoheptulose phosphate by an aldolase-type condensation.

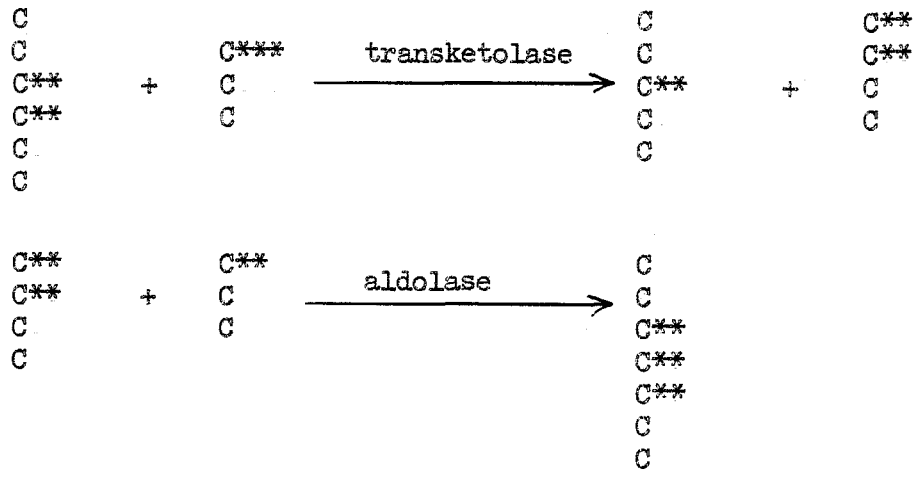

The rate of attainment of uniform labeling of these phosphates is dependent upon the plant used and upon the sizes of its reservoirs in intermediates. Five to ten minutes photosynthesis is generally sufficient to attain C^{14} saturation of these compounds in steady-state light- and CO_2-saturated photosynthesis.

PGA-C^{14} in Photosynthesis

Photosynthetic preparation of PGA-C^{14}. - The PGA reservoir of most plants saturates with C^{14} during the first two minutes of steady-state photosynthesis. The green algae, *Scenedesmus* and *Chlorella*, and the leaves of several higher plants are satisfactory sources. Heat-stable phosphatases[11] are more active in leaves; therefore, more free glyceric acid also appears in their extracts.

Procedure: *Scenedesmus* (*Chlorella* is also satisfactory) culture:-[12] One liter of inorganic culture medium contains the following salts: 5 ml. 1 M KNO_3; 0.5 ml. 1 M K_2HPO_4; 0.5 ml. 1 M KH_2PO_4; 2 ml. 1 M $MgSO_4 \cdot 7H_2O$; 0.25 ml. 0.1 M $Ca(NO_3)_2$; 1 ml. trace element solution containing 1.43 mg. H_3BO_3, 1.05 mg.

$MnSO_4 \cdot H_2O$, 0.05 mg. $ZnCl_2$, 0.04 mg. $CuSO_4 \cdot 5H_2O$ and 0.01 mg. $H_2MoO_4 \cdot H_2O$; 1 ml. iron and versene (Versenes, Inc., formerly Bersworth Chemical Co., Framingham, Mass.) solution. The iron solution is prepared by addition of 24.9 g. $FeSO_4 \cdot 7H_2O$ to a solution of 26.1 g. versene in 268 ml. 1.0 N KOH (15 g. KOH). After dilution to one liter the solution is aerated overnight and the pH is ~5.5. The medium should be pH 6.8. Algae are grown at 25° on 4% CO_2 in air with sufficient agitation to prevent settling of the cells. Light intensity from a bank of daylight fluorescent tubes is 2000 foot candles. The algae are harvested to give a yield of 3 cc. packed cells per liter. Repetition of this culture using 18% inoculum and 82% fresh nutrient gives a uniform daily harvest.

A 1-2% suspension of algae in M/150 pH 6 phosphate buffer is illuminated from both sides in a 1 cm.-thick vessel with two 300 watt reflector-spot incandescent lamps with suitable infra-red filters. A bank of closely spaced white fluorescnet lights (2-5000 footcandles) is also effective. After photosynthesis with 4% CO_2 in air long enough to overcome possible induction periods (up to 1 hour when algae have been stored in the cold or dark) air is flushed through the suspension for 1-5 minutes to remove excess CO_2. A solution of $NaHC^{14}CO_3$ (approx. 0.02 millimoles per minute per gram cells) is injected into the suspension and the vessel closed and agitated for 1-5 minutes. A fixation rate of up to 1.5×10^8 dis./min. per gram cells may be anticipated using $BaCO_3$ with 25% C^{14}. The algae are then poured into four volumes of hot absolute ethanol. The extracted colorless cells are filtered using a filter aid (Hyflo-Supercel) or centrifuged and the residue re-extracted with a smaller volume of hot 20% ethanol. The 20% alcohol extract contains most of the PGA and ribulose diphosphate as well as some polysaccharides.

A similar experiment may be performed using young sugar beet or barley seedling leaves in an illumination chamber having a removable face, Figure 5. The

leaves should be cut from the plants in the light, placed in the chamber, and given $C^{14}O_2$ without delay. The chamber air is partly removed quickly with a water aspairator and replaced with air passed through the U-tube or loop containing an excess of $C^{14}O_2$. $C^{14}O_2$ from 3 mg. $BaC^{14}O_3$ should be prepared for each gram of green tissue per minute of photosynthesis. After a chosen time the chamber is opened (in a well-ventilated hood) and the leaf(s) plunged into liquid nitrogen. It is ground while wet with liquid nitrogen and the powder dumped into boiling 80-90% ethanol. Most of the PGA-C^{14} is obtained upon re-extraction with hot 20% ethanol.

The 20% ethanol extract is concentrated in vacuo to about 1.0 ml. per g. cells and applied in a stripe for paper chromatography in phenol-water on oxalic acid-washed Whatman No. 4 paper and re-run, if necessary, on a second paper in butanol-acetic acid-water. Purity of the labeled product may be determined by phosphatase hydrolysis and rechromatography of the resultant glyceric acid on Whatman No. 1 paper. Possible contaminants will be hexose monophosphates which would be detected as hexoses in the hydrolysate radiogram.

Hydrolysis and Degradation of PGA. - Labeled phosphoglyceric acid eluates are hydrolyzed readily with phosphatase (Polidase-S, Schwarz Laboratories, Inc., Mt. Vernon, N.Y.) and chromatographed on Whatman No. 1 paper. (R_f: phenol, 0.28; butanol-propionic-water, 0.40).

The glyceric acid is first oxidized with periodate at room temperature to give the β-carbon activity in formaldehyde which is isolated as the dimedon derivative. The remaining glyoxylic acid oxidizes more slowly with excess periodate to give carbon dioxide from the carboxyl group and formic acid from the α-carbon atom.

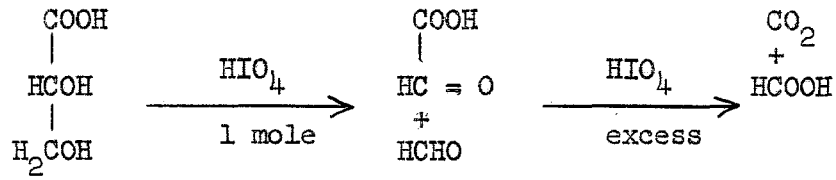

Elution of labeled compounds from paper chromatograms:- The radioactive spot, defined by the radiogram, is cut out in a rectangular area with one end pointed. The rectangular end is attached to a wet paper wick hanging from a small trough, surrounded by an inverted aquarium to maintain humidity, Figure 6. The eluate is collected in a 2 ml. centrifuge tube as it flows from the pointed tip of the paper to the inner surface of the tube. The tube is briefly centrifuged to collect all the eluate in the bottom of the tube. Complete extraction is obtained with 50 µl. for sugars and amino acids and 100-200 µl. for phosphate esters.

Procedure:[13] The glyceric acid was eluted from the paper and the eluate added to 100-200 mg. of calcium glycerate carrier. The mixture is dissolved in ca. 0.5 ml. water and crystallizes upon addition of several volumes of hot absolute ethanol. The labeled calcium glycerate is dried and its specific activity accurately determined. This is done by direct plating of samples with less than 1 mg./cm.^{2} to avoid self-absorption corrections.

Fifty mg. of the labeled calcium glycerate (0.4 millimoles) is placed in a flask with 0.80 ml. of 1.0 N periodic acid. After 2 hours at room temperature, the solution is made slightly alkaline and the volatile contents, including formaldehyde, are distilled *in vacuo* without heating into 13 ml. of a solution of dimethyldihydroresorcinol prepared from 1 g. dissolved in NaOH and diluted with 100 ml. water, from which the dimedon compound of formaldehyde is precipitated by acidification to pH 6-7 and is isolated by centrifugation. It is recrystallized by dissolving in hot ethanol and adding water until incipeint crystallization and then allowing the solution to cool.

To the non-volatile residue of sodium glyoxylate, 5 ml. of 0.1 N periodic acid is added, and after 24 hours at room temperature the volatile products are distilled *in vacuo* into 10 ml. of a carbonate-free 1 N sodium hydroxide solution. Excess barium chloride solution is then added dropwise and the barium carbonate precipitate centrifuged, washed with water and alcohol, dried, and its specific activity determined by direct plating and counting. Plates of less than 1 mg./cm.^{2} may be counted without self-absorption correction when specific activities are high (>50 cpm./mg.). Otherwise thicker samples must be counted with adequate corrections. The supernatant solution is acidified and steam distilled to collect the formic acid. The steam distillate is neutralized with barium hydroxide to phenolphthalein end point and concentrated to dryness at reduced pressure. The barium formate is recrystallized from a small amount of water upon addition of alcohol. The specific activities of the barium formate and dimedon compound are determined, and, with the theoretical yields, they give the radioactivities of the α and β carbons (expressed as percentages of starting radioactivity). The measured weight of barium carbonate and its specific activity is used for calculation of the carboxyl activity. In general, even the measured barium carbonate yield will give a low result since it is diluted by less active CO_2 derived from over-oxidation, from CO_2 from contact with the air, and from carbonate in the sodium hydroxide solution. Reasonably carbonate-free sodium hydroxide is obtained by filtering a saturated (50%, 21 N) solution which has stood a week or more while sodium carbonate separates. It is stored in a sealed vessel and diluted twenty fold for use.

The method has been altered by Aronoff[14] in which the oxidation of glyoxylic acid is done by a fresh solution of M/2 perchlorato-cerate (G. F. Smith Chemical Co., Columbus, Ohio) whereby the oxidation time is reduced to 15 minutes at 40° C.

After distillation of the formaldehyde *in vacuo*, 5 ml. of the cerate solution was introduced with provision for trapping evolved carbon dioxide. The residual formate was then converted to carbon dioxide by excess mercuric oxide during fifteen minutes boiling.

Accumulation of Glycolic Acid during Photosynthesis

When leaves or algae are illuminated aerobically in the absence of carbon dioxide (following $C^{14}O_2$ photosynthesis) copious formation of glycolate is observed. Up to 30% of the C^{14} in the alcohol-soluble compounds of sugar beet leaf has been observed in glycolic acid. It appears that these conditions, which involve accumulation of ketose phosphates, leads to oxidative degradation of the transketolase-C_2 complex to free glycolate. The active glycolic acid oxidase of most plant tissues rapidly oxidizes the glycolate when illumination ceases.

Degradation of Glycolic Acid-C^{14}. -[10] Lead tetraacetate oxidation of glycolic acid yields formaldehyde and carbon dioxide. Since the reaction is best done in acetic acid solution, the 2,4-dinitrophenylhydrazone is chosen as the formaldehyde derivative.

$$\begin{array}{l} COOH \\ | \\ CH_2OH \end{array} \xrightarrow{Pb(OAc)_4} \begin{array}{l} CO_2 \longrightarrow BaCO_3 \\ + \\ HCHO \longrightarrow H_2C{=}N{-}N{-}R \end{array}$$

Procedure: A tracer quantity of C^{14}-labeled glycolic acid, obtained by elution from a paper chromatogram is added to 30.4 mg. of glycolic acid in three ml. of glacial acetic acid in a 50 ml. flask with a 14/20 joint. The solution is then frozen, about 0.5 g. lead tetraacetate added, and the flask is attached through a stopcock to an inverted U-tube (14 mm. diameter tubing) from which the air may be removed through a stopcock. The system is evacuated, the stopcock closed and the reaction mixture heated in a water bath at 90° C.

for thirty minutes. After cooling, the volatile contents of the flask are distilled (with due precaution to prevent bumping) through the U-tube into a second flask containing 80 mg. of 2,4-dinitrophenylhydrazine and immersed in liquid nitrogen.

The stopcock is again closed and the second flask warmed until a clear yellow solution of formaldehyde 2,4-dinitrophenylhydrazone was obtained. The first flask is replaced by a third flask containing 5.0 ml. saturated, carbonate-free, sodium hydroxide solution. Both flasks are immersed in liquid nitrogen for a few minutes, the stopcock is opened and the system re-evacuated. The liquid nitrogen bath is then removed from the second flask and the volatile contents distilled into the third flask. The residue of formaldehyde-2,4-dinitrophenylhydrazone in the second flask may be crystallized from alcohol, purified chromatographically on a silicic acid column and the specific activity determined. This specific activity, together with the theoretical yield based on the carrier taken, gives the total activity of the alpha carbon atom. The third flask is warmed to room temperature, and the solution transferred to a centrifuge tube. It yields, upon addition of excess barium chloride solution, a precipitate of barium carbonate which was washed, dried, weighed and counted. The product of the specific activity of the barium carbonate and the total yield (slightly greater than theoretical due to introduction of inactive carbon dioxide in reagents and manipulation) gives the total activity of the carboxyl carbon of glycolic acid.

Labeled Heptuloses in Photosynthesis

The phosphate esters of sedoheptulose and mannoheptulose are intimately involved in phytosynthesis but do not accumulate to any great extent (10^{-4} M) in normal plant tissues. The low concentration of these esters delayed their identification until the advent of tracer technique and its sensitivity for

selection and detection of such compounds. The free sugars, however, have been known for some time and their accumulation has often been cited as evidence for an abnormal or highly active heptulose metabolism. In developing methods for preparation of labeled heptuloses,[15] however, it became apparent that the turnover of heptulose reservoirs is unusually slow. The exchange between heptulose phosphates and the free sugars is sluggish in both Sedum and avocado. This may be due to lack of suitable kinases for phosphorylation of the free heptuloses.

Avocado leaves contain much free mannoheptulose and serve as a convenient source for its isolation.[15] The accumulation of mannoheptulose in avocado fruit[16] is not predictable and highly dependent on the variety of avocado. Sedoheptulose[17] was isolated from Sedum spectabile and occurs in high concentratrations in other Sedums under a variety of conditions. Up to 80% of the free sugar in the Sedum leaf may be sedoheptulose and it serves as an appealing source of labeled heptulose.

Mannoheptulose-C^{14}. - $C^{14}O_2$ photosynthesis by avocado leaves produced labeled mannoheptulose in moderate amounts during five minutes. Longer photosynthesis would be necessary to saturate the reservoir for production of high specific activity heptulose. The low concentration of mannoheptulose phosphate in leaves precludes its use as a source of labeled mannoheptulose. Separation of the free sugars is accomplished by two-dimensional paper chromatography or by deionizing with ion exchange resins and removal of hexoses by yeast fermentation. In any event it is usually necessary to demonstrate the purity of the labeled mannoheptulose since it cochromatographs almost exactly with glucose in most solvents.

Mannoheptulose was separated from glucose[15] on Whatman No. 1 paper using solvent prepared from 40 vol. n-butanol: 11 vol. ethanol: 19 vol. borate buffer (200 ml. water, 1.25 g. $Na_2B_4O_7 \cdot 10\ H_2O$, 0.25 g. H_3BO_3). After 40-48 hours

descending development heptuloses are detected with orcinol-TCA acetic acid reagent.[18,19] Relative R_f values were glucose, 1.0; mannoheptulose, 0.74; sedoheptulose, 0.54.

Sedoheptulose-C^{14}. - Phytosynthesis of labeled sedoheptulose has been carried out by Tolbert and Zill[20] and by Nordal (unpublished) using *Sedum spectabile*. Tolbert and Zill used stalks of mature plants weighing 20 g. each, while Nordal used young plants weighing 0.5 to 1.0 g. With a light intensity of 100 foot candles, Tolbert and Zill found that 40 g. of plant assimilated 10 mc. of $C^{14}O_2$ during 26 1/2 hours. The yield was satisfactory but not consistent with that expected from the known high concentration of sedoheptulose in these leaves.

Nordal observed the expected sedoheptulose concentration only after 7 to 10 days photosynthesis in $C^{14}O_2$ using 20-minute periods of light and dark to maintain the health of the plant in the closed $C^{14}O_2$-air atmosphere. In the cases examined, periods of a week or more were required to reach apparent saturation of the heptulose reservoir. At this point the amounts of sucrose, fructose and glucose are relatively small.

Preparation from sedoheptulose-7-P of soy bean leaf:- The simplest photosynthesis of experimental amounts of sedoheptulose-C^{14} has been its recovery from sedoheptulose-7-phosphate formed during 1 to 5 minutes photosynthesis by soy bean leaves. These have a relatively high concentration of sedoheptulose-7-P in the monophosphate fraction.

Procedure: Soy bean leaves freshly cut in the light are placed in a glass chamber (Figure 5) of small volume having a detachable glass face. In direct sunlight or with suitable light source the chamber is rapidly evacuated and refilled with air admitted through a tube containing 100-200 μc. $C^{14}O_2$ (5-10 mg. $BaC^{14}O_2$) for each trifoliate leaf. After one or two minutes the

leaf is taken from the chamber, plunged into ethanol and extracted successively with 80% and 50% ethanol. The concentrated extracts are chromatographed two dimensionally on paper (extract of 10-50 mg. plant tissue per sheet) and a radiogram prepared. The total phosphate ester area or the "hexose monophosphate area" is eluted and hydrolyzed with 200 μg. of Polidase-S (Schwarz Laboratories, Inc., Mt. Vernon, N.Y.) in a volume of 1-500 μl. The hydrolysate is chromatographed on Whatman No. 1 paper with phenol-water and butanol-propionic acid-water to separate the resulting sugars. Sedoheptulose lies between glucose and fructose and can be separated from the former on Whatman No. 1 paper. In one-minute photosynthesis the yield is approximately 10-20% of the total fixed C^{14}. Longer photosynthesis gives more sedoheptulose-C^{14} but, of course, a lower fraction of the fixed activity in the heptulose. Five minutes photosynthesis is required to attain essentially uniform labeling.

Preparation from Sedum leaves:- The use of Sedum leaves for sedoheptulose-C^{14} preparation requires adequate temperature control and provisions for maintaining health of the leaf or plant for 24 hours or longer. The relatively large amount of free sedoheptulose in the plant serves to dilute the C^{14} unless a great deal of $C^{14}O_2$ is used over a long period. When $C^{14}O_2$ sufficient for 15-20 hours photosynthesis is used (approx. 50 mg. $BaC^{14}O_2$ per gram leaf tissue) the illumination chamber may be kept closed during alternating light and dark periods for a week or more. The C^{14} is found largely in malic acid, sucrose, fructose, glucose and sedoheptulose, becoming greatest in sedoheptulose after a week. The plant may then be extracted with 80% ethanol for recovery of the product. The sedoheptulose may be isolated directly by paper chromatography[20] when the amounts involved are small. With larger amounts the extract is passed through cation (Dowex 50) and anion (Duolite A-3) exchange resin columns. Fermentation of the neutral sugar fraction by added yeast can be repeated several times to obtain a solution

free of hexoses. Sedoheptulose is converted to sedoheptulose anhydride which crystallizes readily. The anhydride is converted to a 20% equilibrium solution of sedoheptulose by heating one hour at 100° with a well-stirred suspension of 400 mesh Dowex-50-H^+.

Ribulose-C^{14}-Diphosphate

Preparation. - Inasmuch as the carbon dioxide acceptor of photosynthesis is required to accumulate in the absence of carbon dioxide at saturating light intensities it is possible to obtain enhanced concentrations of it by killing the plant under such conditions. When the carbon dioxide pressure is suddenly dropped from 1% to 0.003%, the concentrations of phosphate esters of Scenedesmus change according to the curves of Figure 4.[7] There is a clear maximum in ribulose diphosphate concentration occurring 30-40 seconds after reduction of the carbon dioxide pressure. A similar transient occurs in soy bean leaves and presumably all leaves, but the data available are not so complete as for algae.

Procedure: A Scenedesmus suspension (1%) is allowed to photosynthesize at 5000 f.c. with $C^{14}O_2$ for 1 to 30 minutes depending upon the uniformity of labeling desired. A very rapid stream of nitrogen is introduced to flush out excess $C^{14}O_2$. After 30 seconds, the algae are drained into four volumes of boiling absolute ethanol and re-extracted with 20% alcohol as described for the preparation of PGA-C^{14}. Most of the ribulose diphosphate and phosphoglycerate is contained in the 20% ethanol extract. They are readily separated by paper chromatography in phenol (24-48 hr. development) as a stripe on oxalic acid-washed Whatman No. 4 filter paper. One g. wet cells contains up to one micromole of ribulose diphosphate. Larger amounts may be separated by anion resin column chromatography (cf. section on Column Chromatography of Phosphate Esters, UCRL-2681). An application density of 50 cm./extract of 4 g. of wet cells for a 5 mm.-wide stripe is satisfactory. The ribulose diphosphate

is contaminated only by small amounts of labeled polyglucose compounds and by a trace of fructose, glucose and sedoheptulose diphosphates. The resulting stripe is excised and washed with absolute ethanol and ether. Elution is best performed on short sections of stripe or by suspensing the stripe from a wick in a long trough of water and collecting the eluate from the serrated lower edge of the stripe in a correspondingly long receiver.

Degradation of Labeled Ribulose and Sedoheptulose[6]

For lack of adequate enzymatic methods the chemical degradation of these sugars has been developed. The reactions used for the degradation are shown on the accompanying flow sheets (Figures 7 and 8). The free sugars obtained upon phosphatase hydrolysis of chromatographed phosphate esters are purified by two-dimensional chromatography.

Sedoheptulosan. - The eluted heptulose is heated at 100° for one hour with a suspension acid-treated Dowex-50 (400 mesh) and separated in a small centrifuge tube. The resin is washed with water and the solution is chromatographed to separate the 80% yield of sedoheptulosan (R_f 0.69 in phenol-water) from the equilibrium mixture.

Oxidation of Sedoheptulosan:- The radioactive sample and carrier were treated with sodium periodate as described by Pratt, Richtmeyer and Hudson.[21,6]

Procedure: A solution of 35.2 mg. (0.183 millimoles) sedoheptulosan and the radioactive sample of negligible weight in 0.35 ml. is oxidized during 48 hours at room temperature with 1.1 ml. of N $NaIO_4$. To acidify the solution, 100 µl. of 2 M HIO_3 is added. The solution is distilled to dryness and the formic acid titrated with 0.1 N barium hydroxide. Barium formate is recovered upon evaporation to incipient dryness and addition of ethanol to its concentrated solution. The labeling in C-4 is calculated from the initial specific activity of the sedoheptulosan and that of the isolated barium formate.

Formation of Osazones. - Hexose and heptose osazones are prepared using phenylhydrazine hydrochloride, sodium acetate, acetic acid and about 25 mg. of sugar carrier for the reaction. Sedoheptulosazone cocrystallizes with glucosazone sufficiently well for fructose to be used as carrier with sedoheptulose activity.

Labeled arabinosazone is made with 10 mg. arabinose carrier by the method of Haskins, Hann and Hudson[22] using 13 µl. acetic acid, 40 µl. methyl cellosolve and 26 µl. of phenylhydrazine. The mixture is heated one hour on the steam bath and diluted with one ml. of cold water. The precipitate is collected and washed with two 25 µl. portions of 10% acetic acid and four 50 µl. portions of water. The osazone is recrystallized once from absolute ethanol and diluted, as desired, for each degradation, with unlabeled arabinosazone from a large scale preparation.

Oxidation of Osazones. - Recrystallized osazones are oxidized by periodate in bicarbonate buffer as described by Topper and Hastings.[23]

Procedure for oxidation of arabinosazone:-[6] 17 mg. of arabinosazone (0.05 millimoles) is dissolved by warming in 6 ml. of 66% alcohol and 50 µl. of 1 N sodium bicarbonate. The solution is cooled to 30° and 200 µl. of 1 N papaperiodic acid (0.10 millimoles) is introduced. An orange-yellow precipitate of mesoxaldehyde-1,2-bisphenylhydrazone forms immediately. After 15 minutes, the mixture is centrifuged, and the centrifuge washed several times with 66% ethanol. The precipitate, after being recrystallized from 66% ethanol, is counted directly. The percentage of activity in C-1, 2 and 3 can be calculated from the specific activity and the theoretical yield. The supernate and washings are distilled to dryness *in vacuo*. To the distillate, which contains formaldehyde, is added 35 mg. of dimedon reagent (dimethyldihydroresorcinol) dissolved in 1 ml. of ethanol, and a drop of piperidine. After warming the mixture for

10 minutes on the steam bath, 0.5 ml. of glacial acetic acid is added. Formaldimedon precipitates upon standing. It is recrystallized from an ethanol-water mixture and its specific activity measured by direct plating. From this, the activity in C-5 can be determined.

The residue from the previous distillation contains sodium formate, sodium bicarbonate and sodium iodate. This residue is dissolved in 5 ml. of water and then 100 mg. of iodic acid is added. The solution is then distilled to dryness *in vacuo*. The formic acid in the distillate is neutralized with barium hydroxide to a phenolphthalein end point, and after evaporation on the steam bath to ca. 1 ml., the barium formate is precipitated by the addition of absolute alcohol. The salt is recrystallized several times from a small volume of water by the addition of alcohol, and counted. From its specific activity the C^{14} percentage in carbon atom 4 of ribulose can be calculated.

Cerate Oxidation of Ketoses. - Principle:- Carbonyl carbons in ketoses may be converted to CO_2 by cerate oxidation in perchloric acid solutions. The oxidation of the carbonyl carbon of a ketose to CO_2 by cerate ion was performed according to the method described by Smith.[24]

Procedure: To a solution of an aliquot portion of radioactivity plus weighed carrier (sedoheptulosan or fructose) is added a slight excess of 0.5 *M* cerate ion in 6 *N* perchloric acid, the final concentration of acid being 4 *N*. The resultant CO_2 is swept with nitrogen into CO_2-free sodium hydroxide. The reaction is allowed to proceed for one hour at room temperature and then the CO_2 is precipitated and counted as barium carbonate. In all cases the theoretical amount of carbon dioxide was evolved.

Catalytic Hydrogenation of Tracer Amounts of Sugars. - Raney nickel is widely used for reduction of sugars but is not applicable for the small amounts obtained paper chromatographically. The alkaline nature of this catalyst

resulted in almost complete and irreversible adsorption of the substrate. Platinic oxide (Adams' Catalyst), on the other hand, is acidic by virtue of its method of preparation and adsorbs almost none of the sugar substrate.

Procedure: The eluted sugar, usually with 50-100 μg. of carrier sugar is hydrogenated in 50% alcohol solution using 5-10 mg. platinic oxide. Although the reaction has been reported[25] using 2000 p.s.i. of hydrogen at temperatures of 80-100° C. for 6 hours, it may be possible to use milder conditions such as room temperature and 3 atmospheres hydrogen pressure.[26] Such an investigation using labeled fructose, from which mannitol is readily separable, can be readily performed. The catalyst is removed by filtration with celite and the polyol purified by two-dimensional chromatography. Since sugar alcohols often chromatograph closely to related sugars it may be difficult to be certain of the yields in these reductions.

Periodate Oxidation of Ribitol. - Carrier ribitol (adonitol) or volemitol is added to an aliquot of the radioactive alcohol and treated at room temperature with a slight excess of paraperiodic acid. After 6-7 hours the formic acid and formaldehyde are distilled *in vacuo*. After titrating the formic acid with barium hydroxide, the formaldehyde is redistilled and precipitated as formaldimedon. Both the residual barium formate and formaldimedon may be recrystallized before plating and counting.

Bacterial Oxidation of Heptitols from the Reduction of Sedoheptulose. - The radioactive reduction products of sedoheptulose give only one spot upon chromatography. After elution these were oxidized by *Acetobacter suboxydans* in a small-scale modification of the usual method.[27]

Procedure: Two mg. of volemitol and about 100 μl. of solution of radioactive heptitols are placed in a 7 mm. diameter vial and an amount of yeast

extract sufficient to make an 0.5% solution is added. The vial is sterilized, then inoculated from a 24-hour culture of Acetobacter and left for a week at room temperature in a humid atmosphere.

The bacteria are centrifuged from the incubation mixture and the supernatant solution chromatographed. Three radioactive spots were obtained. The two major spots were mannoheptulose and sedoheptulose, the oxidation products of volemitol. The third had R_f values very similar to those of fructose and cochromatographed with authentic guloheptulose, the oxidation product of β-sedoheptitol (R_f in phenol = 0.47; R_f in butanol-propionic acid-water = 0.24).

Both mannoheptulose and guloheptulose have carbon chains inverted from the original sedoheptulose and are suitable for oxidation to obtain sedoheptulose C-6 activity from their C-2. In the small-scale fermentations, however, the oxidation appeared to be incomplete. The original alcohol did not separate chromatographically from mannoheptulose. Therefore, the easily purified guloheptulose, despite its much poorer yield, was used for subsequent degradations with cerate ion to obtain C-6 activity of sedoheptulose.

Degradation of Malic Acid

α-Carboxyl. - Malic acid is readily isolated paper chromatographically. It has been degraded by permanganate oxidation,[28] which gives two moles of carbon dioxide. The von Pechmann Reaction[29] was adapted by Racusen and Aronoff[30] to the degradation of malic acid in order to differentiate between carbons 1 and 4.

When malic acid is heated in sulfuric acid the product is coumalic acid as shown in Equation I.

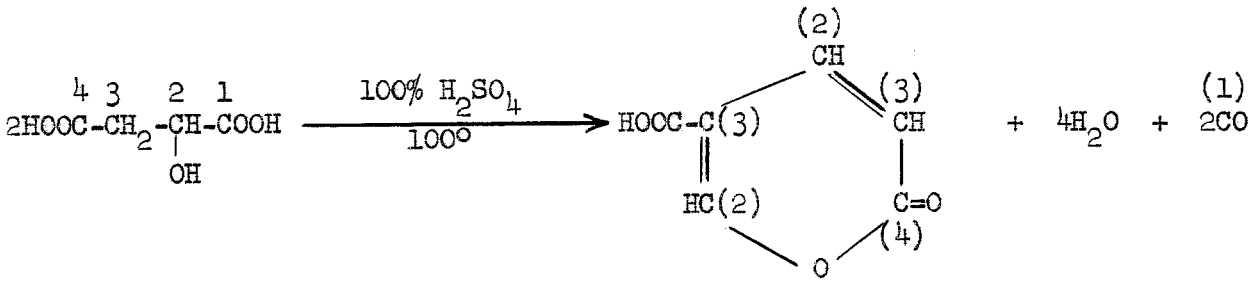

Coumalic acid

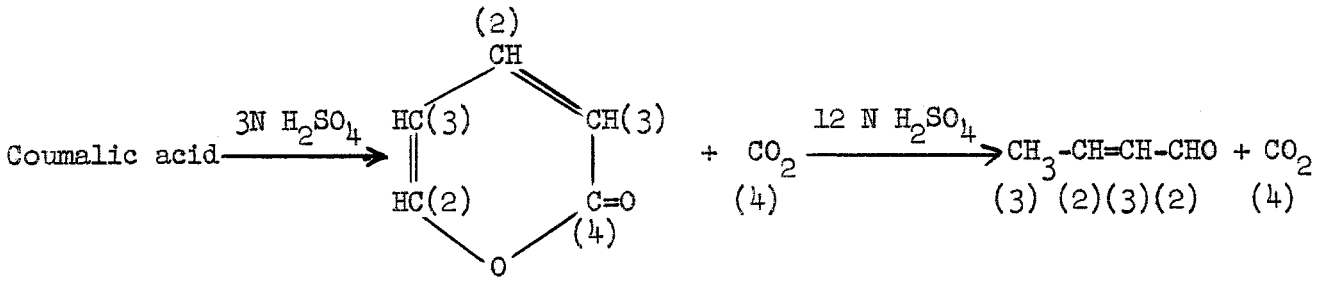

Coumalin

Coumalic acid is cleaved in dilute acid and carbon dioxide derived from β-carboxyl groups is evolved. Thus one may determine the activities of the (1) and (4) positions of the initial malic acid.

A solution of n grams of malic acid in 3 n grams of sulfuric acid is heated at 100° for two hours with a nitrogen stream to remove evolved CO. The gas is freed of CO_2 by passing through a sodium hydroxide bubbler and then passed through hot copper oxide (650° C.), whereupon the carbon dioxide formed is collected in alkali and counted as barium carbonate (P. K. Christensen, this laboratory, unpublished). A few percent (1-4%) of C-1 activity is evolved as CO_2 during this reaction.

Procedures for Determining β-Carboxyl. - Coumalic acid is obtained by the addition of 4 n grams of water to the reaction mixture. After one day it is filtered off and recrystallized from methanol. The purified acid was heated in 3 N H_2SO_4 for one hour on the steam bath and the evolved carbon dioxide (1/2 C-4) was collected in alkali and counted as barium carbonate

(43-55% yield). The radioactivity in C-4 is twice the specific activity times the calculated yield of the barium carbonate. Prolonged heating increases the CO_2 yield without affecting its specific activity, hence the calculated CO_2 yield is taken for determination of C-4 radioactivity.

The β-carboxyl activity may be determined by degradation by Lactobacillus arabinosus.[31] The eluted malate was incubated for 30 minutes at 37° C. with 20 mg. freeze-dried bacteria, 3 ml. of 0.2 M phosphate buffer (pH 4.5) and 3 ml. of 0.0032 M $MnCl_2$. The evolved CO_2 was converted to barium carbonate and represented the β-carboxyl. The remaining three carbon atoms are obtained as lactate which can be degraded by standard methods.

In short periods of photosynthesis the malic acid is primarily carboxyl-labeled. Malic acid formed in the dark is 60-70% carboxyl-labeled. The major distinction between malic acid formed during photosynthesis and that formed in the dark[31] is the more rapid equilibration of carboxyl activity in the light. The 2- and 3-carbons of malic are relatively slowly labeled, several minutes of normal photosynthesis being required to obtain uniform C^{14} distribution.

References

(1) The work described in this paper was sponsored by the U.S. Atomic Energy Commission.

(2) M. Calvin and A. A. Benson, Science, 109, 140 (1949).

(3) A. A. Benson, S. Kawaguchi, P. M. Hayes and M. Calvin, J. Am. Chem. Soc., 74, 4477 (1952).

(4) R. Consden, A. H. Gordon and A. J. P. Martin, Biochem. J., 38, 224 (1944).

(5) J. W. H. Lugg and B. T. Overell, Nature, 160, 87 (1947); Aust. J. Sci. Res., 1, 98 (1948).

(6) J. A. Bassham, A. A. Benson, L. D. Kay, A. Z. Harris, A. T. Wilson and M. Calvin, J. Am. Chem. Soc., 76, 1760 (1954).

(7) Alexander Thomas Wilson, Thesis, University of California, 1954.

(8) M. Calvin and P. Massini, Exper., 8, 445 (1952).

(9) J. R. Quayle, R. C. Fuller, A. A. Benson and M. Calvin, J. Am. Chem. Soc., 76, 3610 (1954).

(10) L. Schou, A. A. Benson, J. A. Bassham and M. Calvin, Physiol. Plant., 3, 487 (1950).

(11) H. Boroughs, Arch. Biochem. Biophys., 49, 30 (1954).

(12) L. Norris, R. E. Norris and M. Calvin, J. Exper. Bot., in press.

(13) J. A.Bassham, A. A. Benson and M. Calvin, J. Biol. Chem., 185, 781 (1950).

(14) S. Aronoff, Arch. Biochem., 32, 237 (1951).

(15) A. Nordal and A. A. Benson, J. Am. Chem. Soc., in press (1954).

(16) F. B. LaForge, J. Biol. Chem., 28, 517 (1916).

(17) F. B. LaForge and C. S. Hudson, J. Biol. Chem., 30, 61 (1917).

(18) R. Klevstrand and A. Nordal, Acta Chem. Scand., 4, 1320 (1950).

(19) A. Bevenue and K. T. Williams, Arch. Biochem. Biophys., 34, 225 (1951).

(20) N. E. Tolbert and L. P. Zill, Plant Physiol., 29, 288 (1954).

(21) J. W. Pratt, N. K. Richtmeyer and C. S. Hudson, J. Am. Chem. Soc., 74, 2200 (1952).

(22) W. T. Haskins, R. M. Hann and C. S. Hudson, J. Am. Chem. Soc., 68, 1766 (1946).

(23) Y. J. Topper and A. B. Hastings, J. Biol. Chem., 179, 1255 (1949).

(24) G. Frederick Smith, Cerate Oxidimetry, G. Frederick Smith Chemical Co., Columbus, Ohio, 1942.

(25) A. A. Benson, J. A. Bassham, M. Calvin, A. G. Hall, H. Hirsch, S. Kawaguchi, V. Lynch and N. E. Tolbert, J. Biol. Chem., 196, 703 (1952).

(26) J. X. Khym, D. G. Doherty and W. E. Cohn, J. Am. Chem. Soc., in press.

(27) L. C. Stewart, N. K. Richtmeyer and C. S. Hudson, J. Am. Chem. Soc., 74, 2206 (1952).

(28) H. A. Wood, C. H. Werkman, A. Hemingway and O. A. Nier, J. Biol. Chem., 139, 377 (1941).

(29) H. von Pechmann, Ber., 17, 936 (1884).

(30) D. W. Racusen and S. Aronoff, Arch. Biochem. Biophys., 42, 25 (1953).

(31) S. Korkes and S. Ochoa, J. Biol. Chem., 176, 463 (1948).

Table I

Effect of Time, Light Intensity and Source in Determining C^{14} Distribution in Products of Photosynthesis in $C^{14}O_2$

Time	Plant	Light Intensity fc	Phosphoglycerate			Hexose			Reference
			COOH	CHOH	CH_2OP	3,4	2,5	1,6	
27 h	Sunflower	Dark	100[a]	0	0	87	6	7	b
0.4 sec.	Soy bean	5000				98	-	-	c
2 sec.	Barley	5000	70	15	15				d
5 sec.	Soy bean		85	5	6				e
5.4 sec.	Scenedesmus	8000	81	5.3	5.6	43	3	3	f
15 sec.	Barley	5000	49	25	26	52	25	23	d
15 sec.	Soy bean		44	21	35				e
60 sec.	Barley	5000	44	30	25	37	34	32	d
60 sec.	Scenedesmus	8000	56	19	25				g
1.5 min.	Sunflower	10,000				48	26	25	b
3 min.	Sunflower	70				88	3	9	h
4 min.	Sunflower	500	41[a]	29	30	41	29	30	h
4 min.	Sunflower	10,000				37	33	30	b
5 min.	Soybean	5000	40	35	38				
10 min.	Sunflower	70	67[a]	16	17	70	14	16	h

(a) Alanine degradation data. PGA labeling has been shown identical in many experiments.
(b) M. Gibbs, Plant Physiol., 26, 549 (1951).
(c) Anne Grace Zweifler, Thesis, University of California, 1953.
(d) M. Calvin, J. A. Bassham, A. A. Benson, V. H. Lynch, C. Ouellet, L. Schou, W. Stepka and N. E. Tolbert, Symp. of Soc. for Exper. Biol., V, 284 (1951).
(e) S. Aronoff, Arch. Biochem., 32, 237 (1951).
(f) J. A. Bassham, A. A. Benson, L. D. Kay, A. Z. Harris, A. T. Wilson and M. Calvin, J. Am. Chem. Soc., 76, 1760 (1954).
(g) S. Kawaguchi, This laboratory, unpublished data.
(h) M. Gibbs, Arch. Biochem. Biophys., 45, 156 (1953).

Table II

C^{14} Distribution in Sedoheptulose, Ribulose and Fructose Phosphates of Brief Photosynthesis

5 sec. Scenedesmus		5.4 sec. Scenedesmus			8.8 sec. Scenedesmus		0.4 sec. Soy bean	5 sec. Soy bean
Sedo.	Rib.	Sedo.	Rib.	Fruc.	Sedo.	Rib.	Sedo.	Sedo.
2		2					--	4
2		2		3	3		--	4
34	16	28	11	3		11	33	30
18	16	25	10	43	22	11	8	29
34	62	26	69	42		64	49	31
2	2	2	5	3		8	--	4
2	2	2	3	3		5	--	4

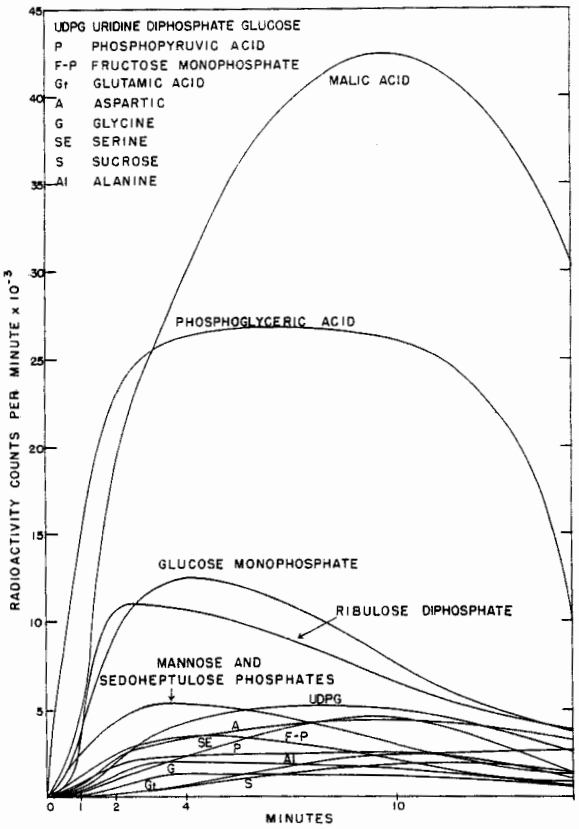

Fig. 1 Radioactivity Appearance Curves for Photosynthetic Intermediates in Scenedesmus[3]

Radioactivities were measured by direct counting of the labeled compounds on paper chromatograms of extracts taken at five-second intervals. Data up to 4 min. may be considered "steady state." Thereafter, the supply of $C^{14}O_2$ was insufficient and reservoirs were diluted by exchange with unlabeled plant constituents.

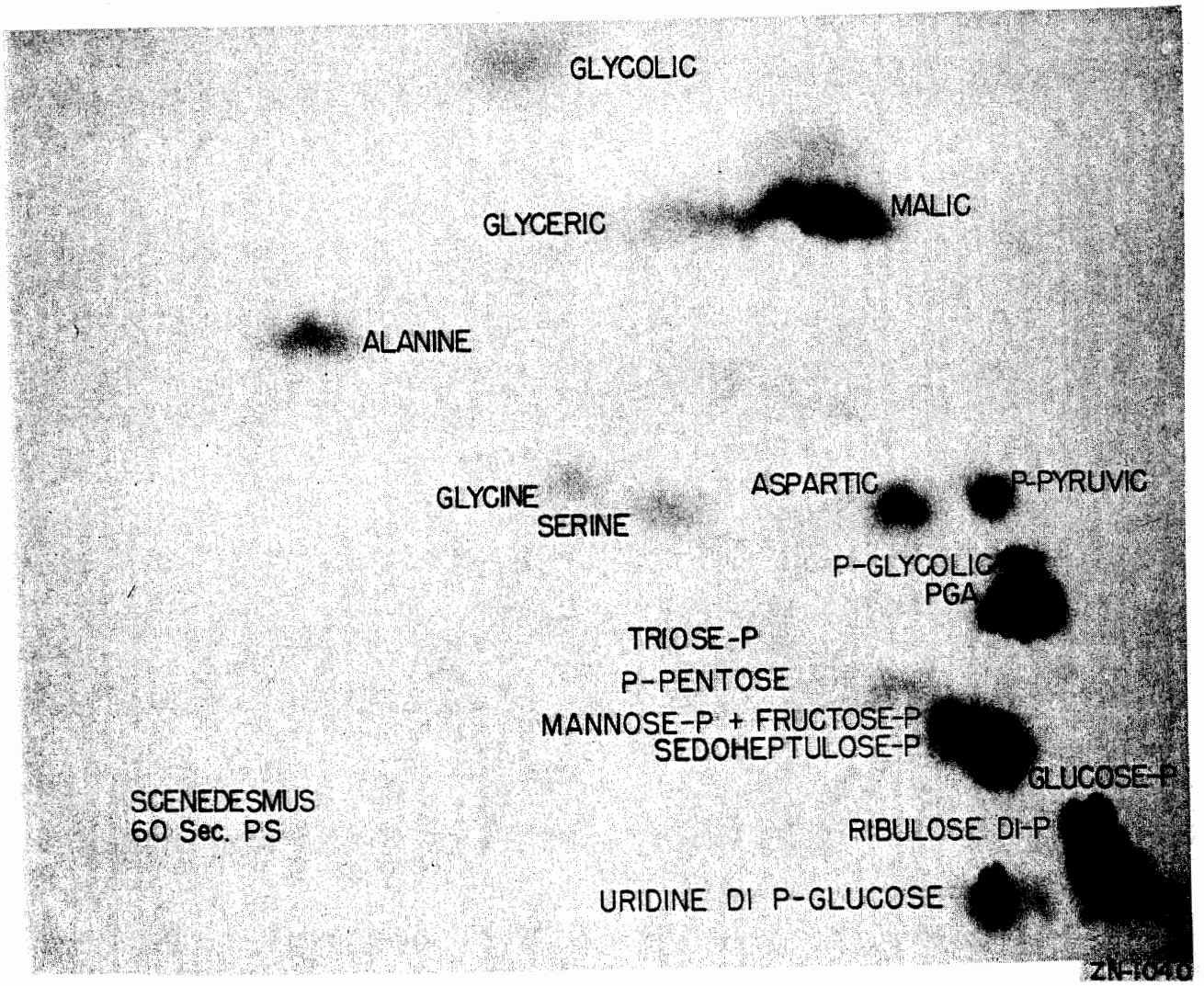

Fig. 2 Radioactive Products of 60 Seconds Photosynthesis in $C^{14}O_2$ by Scenedesmus

Developed in phenol-water (right to left) and butanol-propionic acid-water (bottom to top) on oxalic acid-washed Whatman No. 1 paper.

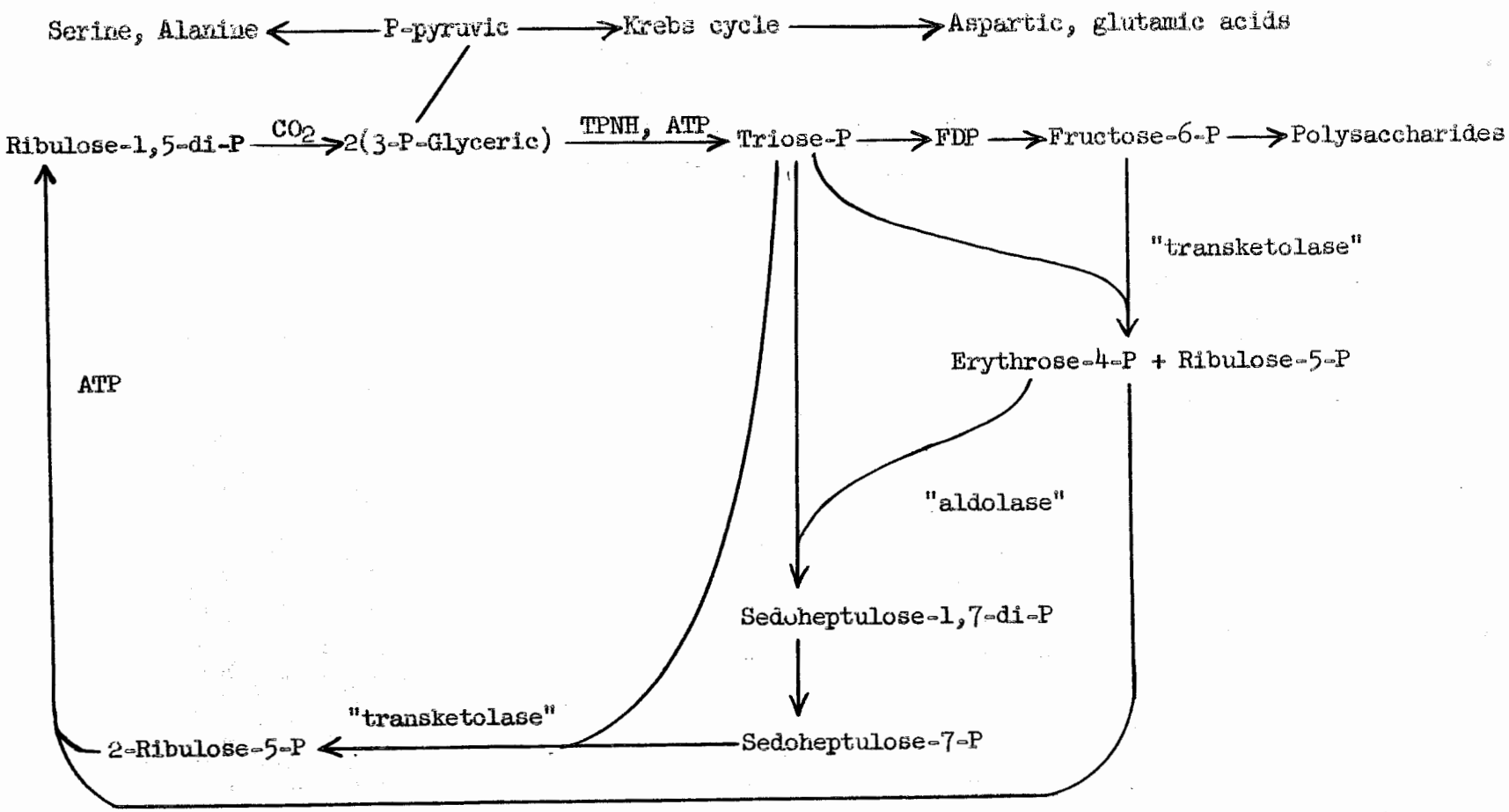

Figure 3

Cyclic System for Regeneration of CO_2-Acceptor

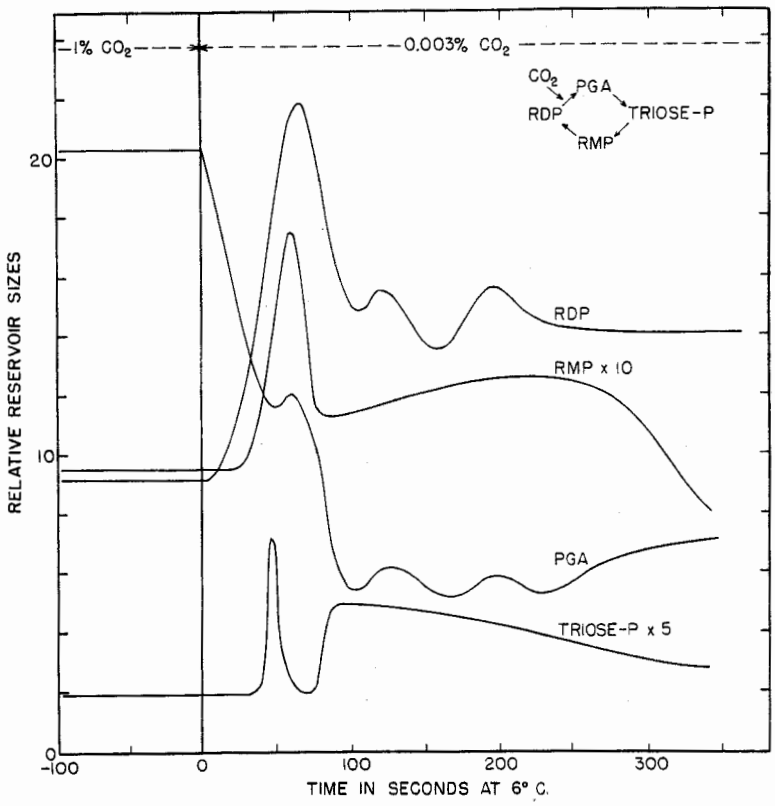

TRANSIENTS IN THE REGENERATIVE CYCLE

MU-7422

Fig. 4 Dependence of Reservoir Sizes upon Changes in CO_2 Pressure in Scendesmus

Samples were taken at five-second intervals from a large vessel of Scendesmus photosynethesizing in Circulating 1% and 0.003% $C^{14}O_2$ in air. Data are obtained by direct counting of radioactive areas on two-dimensional chromatograms.

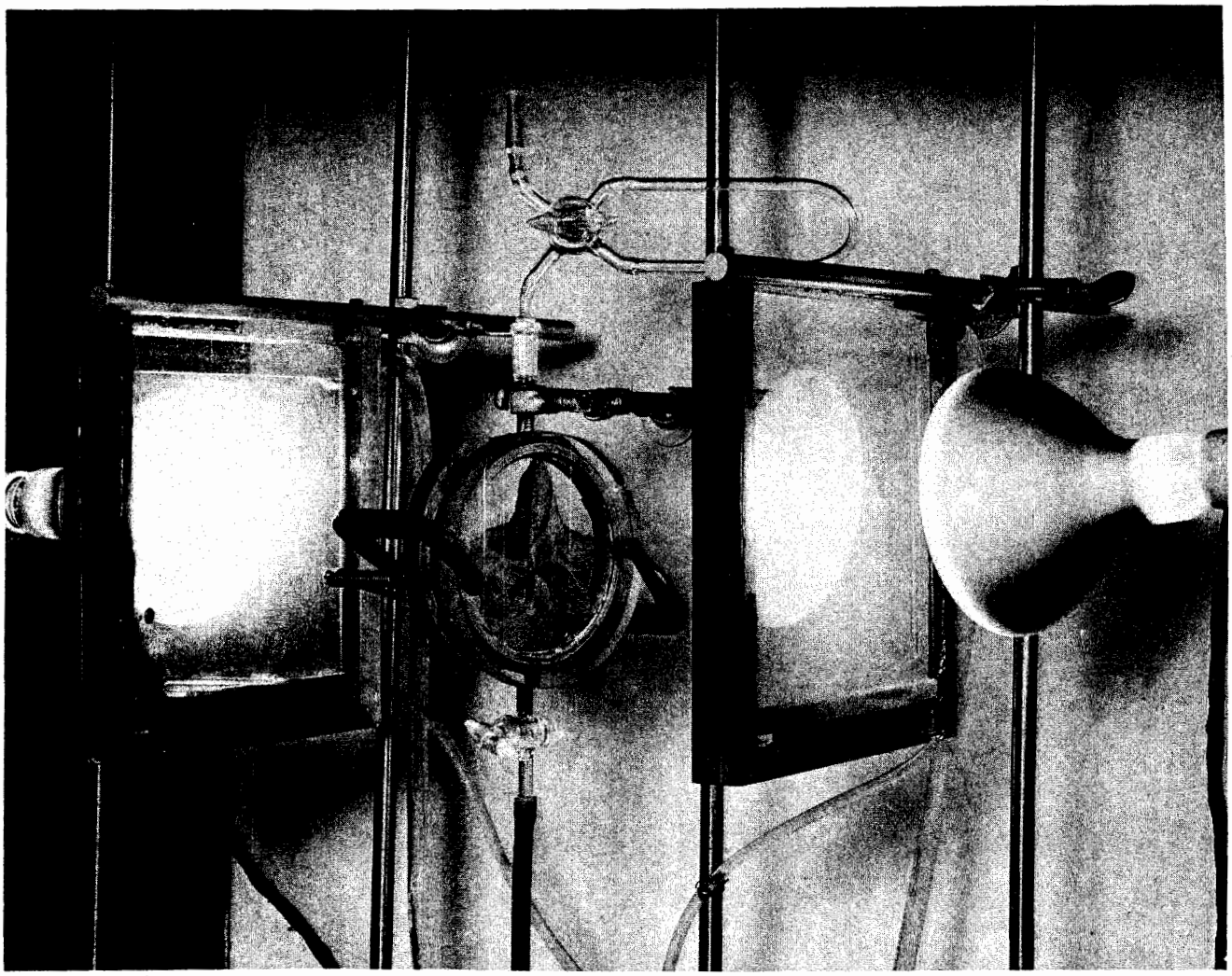

ZN-952

Fig. 5 Photosynthesis Chamber for Leaves
$C^{14}O_2$ is stored in the "loop" above the chamber which has a connection to a water aspirator. The rectangular water baths contain infra-red absorbing filters.

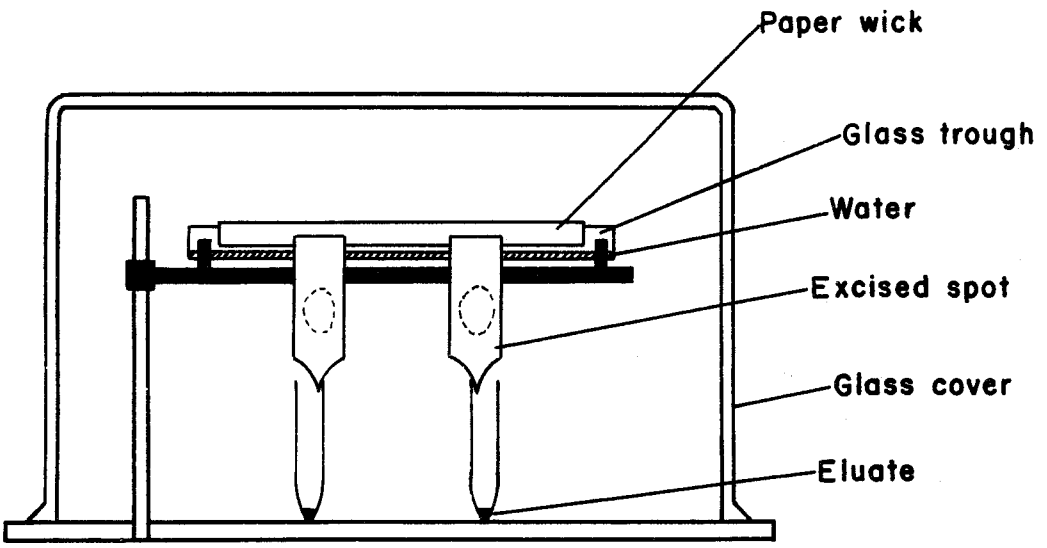

ELUTION APPARATUS FOR CHROMATOGRAPHED COMPOUNDS

MU-8078

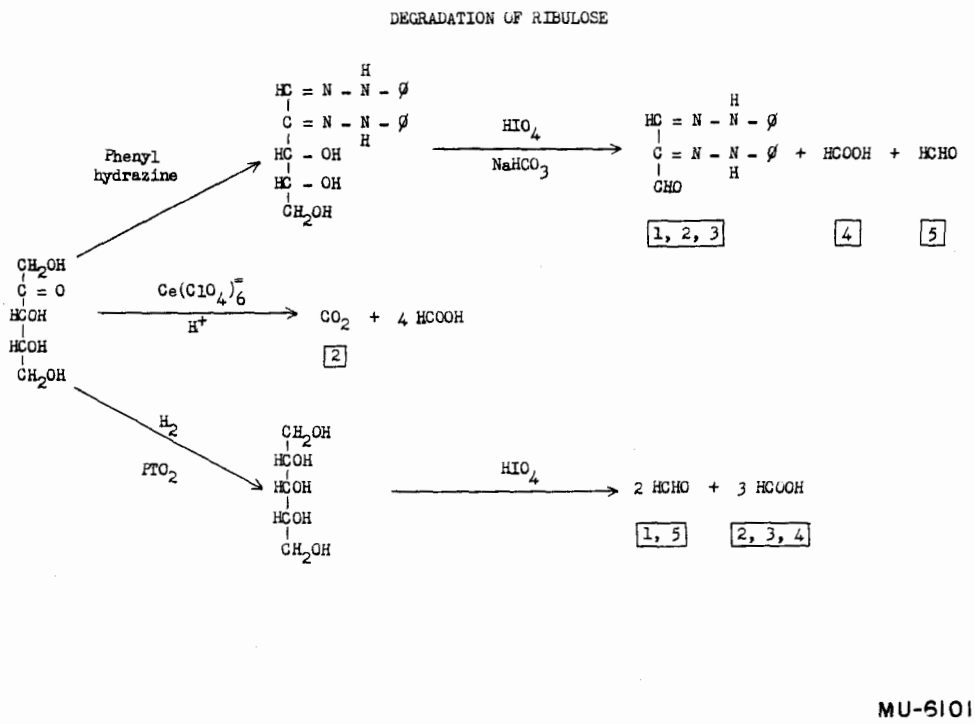

Fig. 7 Chemical Degradation of Ribulose

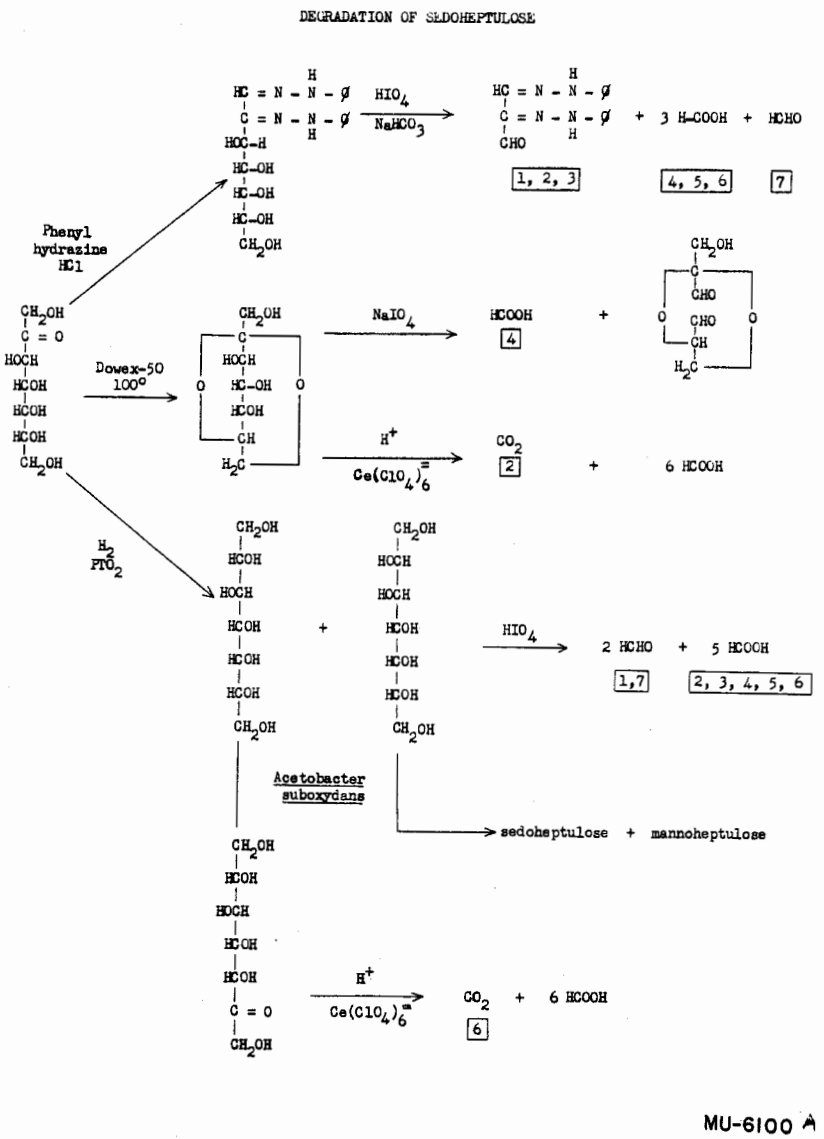

Fig. 8 Degradation of Sedoheptulose